STATE OF ILLINOIS
DEPARTMENT OF TRANSPORTATION

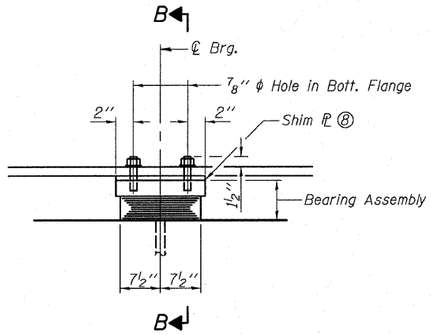


ELEVATION AT PIERS 1 & 3

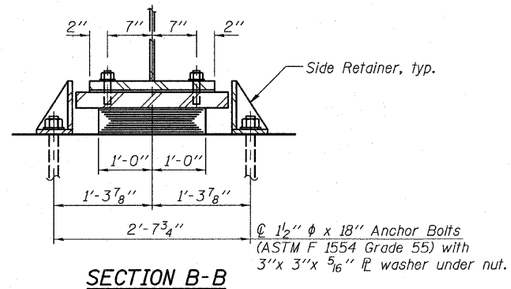


SECTION B-B

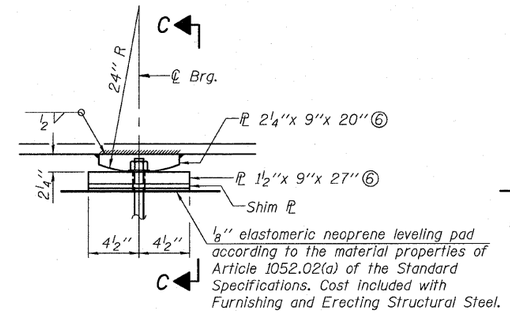


ELEVATION AT PIER 2

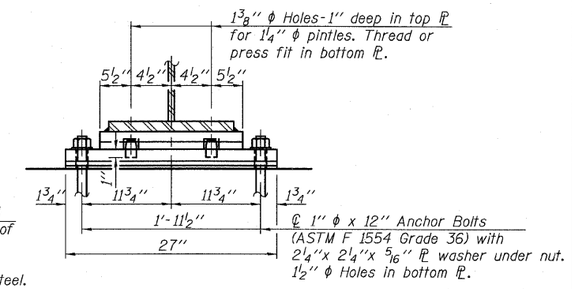


SECTION C-C

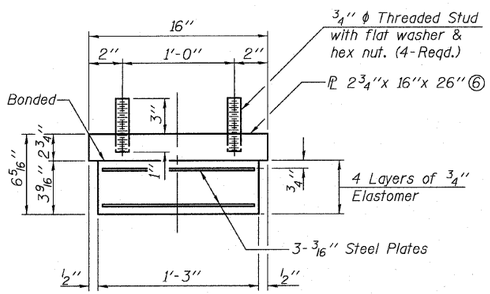


BEARING ASSEMBLY ⑧

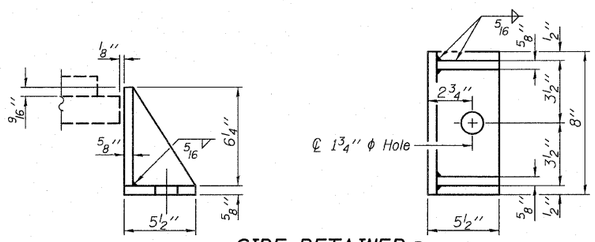


SIDE RETAINER ⑨

TYPE I ELASTOMERIC EXP. BRG.

FIXED BEARING

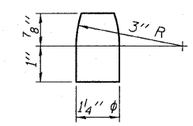


PINTLE

BILL OF MATERIAL

| Item | Unit | Total |
|---|---|---|
| Elastomeric Bearing Assembly Type I | Each | 12 |
| Anchor Bolts, 1" | Each | 12 |
| Anchor Bolts, 1 1/2" | Each | 24 |

Notes:

1. Anchor bolts shall be ASTM F 1554 all-thread or an Engineer-approved alternate material of the grades and diameters specified. ASTM A 307 Grade C anchor bolts may be used in lieu of ASTM F 1554 Grade 36 (Fy=36ksi). The corresponding specified grade of AASHTO M 314 anchor bolts may be used in lieu of ASTM F 1554.
2. Anchor bolts at fixed bearings may be either cast in place or installed in holes drilled after the supported member is in place.
3. Anchor bolts for side retainers may be cast in place or installed in holes drilled before or after members are in place.
4. Drilled and set anchor bolts shall be installed according to Article 521.06 of the Standard Specifications.
5. Side retainers and other steel members required for the bearing assembly shall be included in the cost of Elastomeric Bearing Assembly Type I.
6. The structural steel plates of the Bearing Assembly shall conform to the requirements of AASHTO M 270 Grade 50.
7. Two 1/8 in. adjusting shims shall be provided for each bearing in addition to all other plates or shims and placed as shown on bearing details.
8. Shim plates shall not be placed under Bearing Assembly.
9. Equivalent rolled angle with stiffeners will be allowed in lieu of welded plates.

BEARING DETAILS
STRUCTURE NO. 026-0105

| SHEET NO. 22 | F.A.P. RTE. | SECTION | COUNTY | TOTAL SHEETS | SHEET NO. |
|---|---|---|---|---|---|
| 38 SHEETS | 752 | (U-2BR1)B-1 | FAYETTE | 71 | 44 |
| | | | CONTRACT NO. 74235 | | |
| | FED. ROAD DIST. NO. 7 | ILLINOIS | FED. AID PROJECT | | |


OATES ASSOCIATES
Consulting Engineers
Eastport Business Center 1
100 Lanter Court, Suite 1
Collinsville, Illinois 62234
618-345-2200
Design Firm License No. 184.001115


DESIGNED JAD
CHECKED DGL
DRAWN JAD
CHECKED DGL