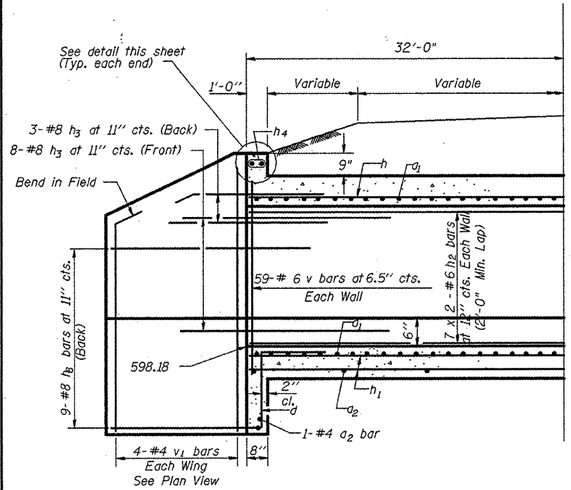

HALF LONG. SECTION

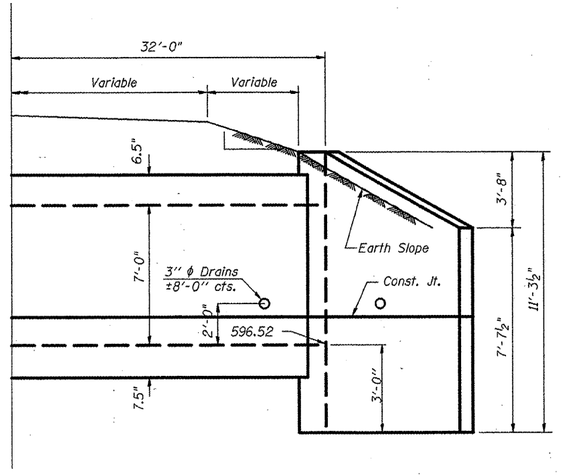

HALF ELEVATION

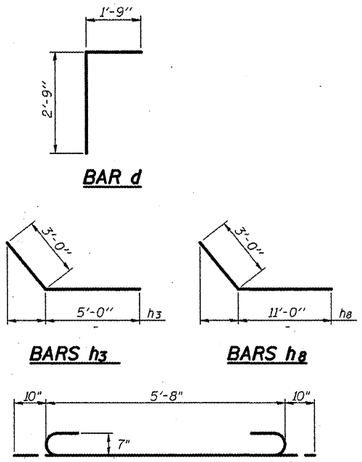

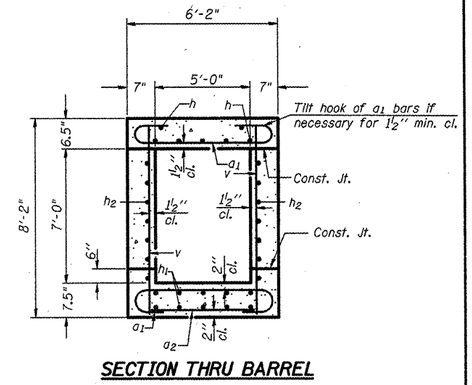

SECTION THRU BARREL

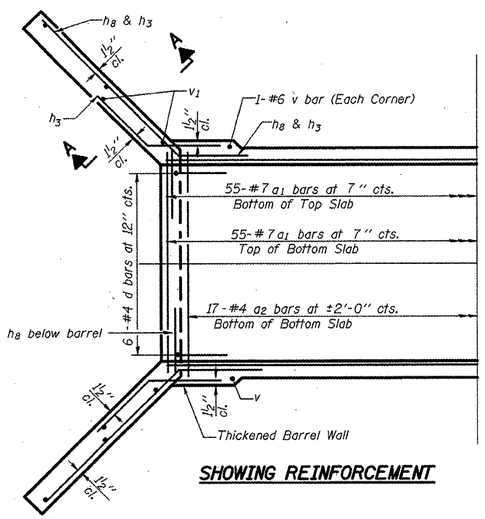

SHOWING REINFORCEMENT

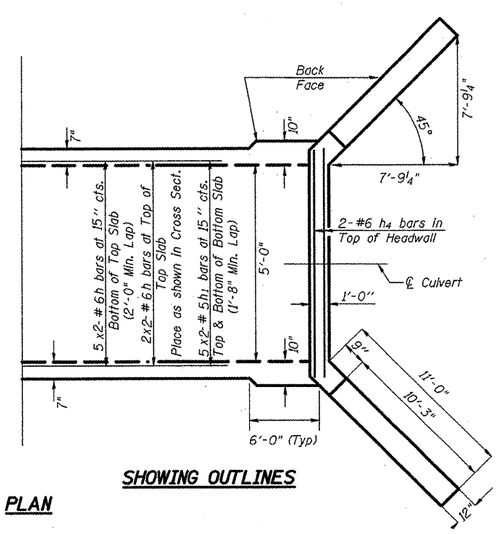

SHOWING OUTLINES

PLAN

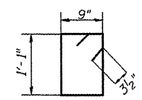

DOWNSTREAM HEADWALL DETAIL, s

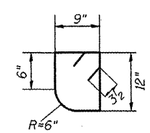

UPSTREAM HEADWALL DETAIL, s,

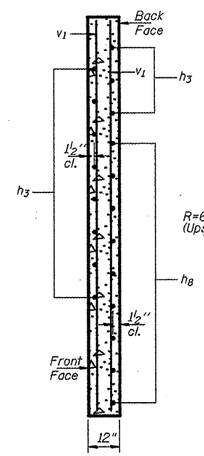

SECTION A-A

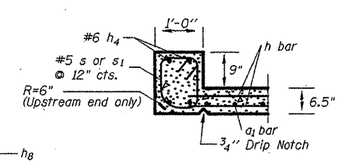

HEADWALL DETAIL

BILL OF MATERIAL

Bar	No.	Size	Length	Shape
a1	220	#7	7'-4"	
a2	36	#4	5'-8"	
d	12	#4	4'-6"	
h	28	#6	16'-10"	
h1	40	#5	16'-8"	
h2	56	#6	16'-10"	
h3	44	#8	8'-0"	
h4	4	#6	5'-10"	
h8	36	#8	14'-0"	
v	240	#6	8'-2"	
v1	16	#4	10'-11"	
s	6	#5	4'-5"	
s1	6	#5	4'-5"	
Concrete Removal			Cu. Yd.	27.7
Concrete Box Culverts			Cu. Yd.	54.9
Reinforcement Bars			Pound	11725
¾" ϕ Expansion Bolts			Each	28
Str Rep Con DP =<5			Sq. Ft.	59.2
Rock Fill			Ton	81.2
Geotech. Fabric			Sq. Yd.	68.8
Filter Fabric			Sq. Yd.	135.4
R&D Unsuitable			Cu. Yd.	39.6
Temp. Soil Retention			Sq. Ft.	522.1

DESIGN STRESSES

fy = 60,000 psi
f'c = 3,500 psi

There are approximately 10 small repair areas throughout the length of the existing 5x7 box culvert. Final locations of patches shall be determined by the Engineer.

NOTES

A distance of half the length of the wingwall but not less than six feet of the barrel shall be poured monolithically with the wingwalls.
Reinforcement Bars shall conform to the requirements of ASTM A 706 Grade 60. See Special Provisions.
Bars indicated thus 12 x 4-#5 etc. indicates 12 lines of bars with 4 lengths per line.
All construction joints shall be bonded.

LOADING HS 20-44 & ALT.

SSB-H-0 10-22-04

FILE NAME = miscellaneous_sheets.dgn	USER NAME = horstkj	DESIGNED - KJH	REVISED -	STATE OF ILLINOIS DEPARTMENT OF TRANSPORTATION	BOX CULVERT EXTENSION DETAIL STA 705+03	F.A.P RTE.	SECTION	COUNTY	TOTAL SHEETS / SHEET NO.
		DRAWN - JGJ	REVISED -			317	16W-2,RS-4;17W-1,RS-3	FULTON	240 / 101
	PLOT SCALE = 100.0000 ' / IN.	CHECKED - BJT	REVISED -					CONTRACT NO. 88703	
	PLOT DATE = 4/19/2010	DATE - 01-05-10	REVISED -		SCALE: SHEET NO. 1 OF 2 SHEETS STA. TO STA.	FED. ROAD DIST. NO.	ILLINOIS	FED. AID PROJECT	

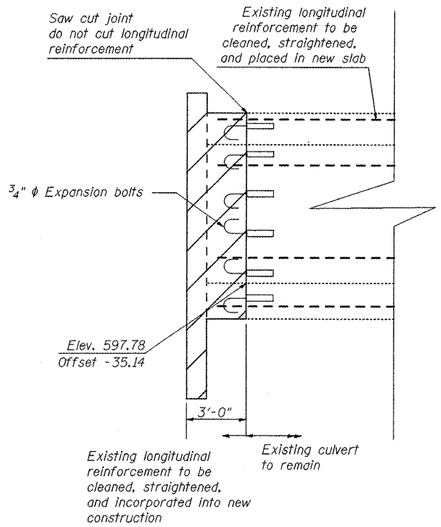

EAST CULVERT EXTENSION

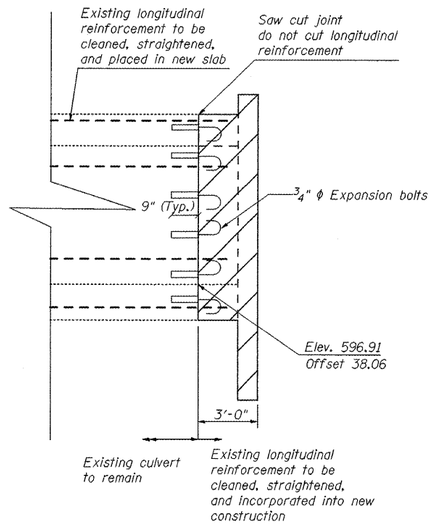

WEST CULVERT EXTENSION

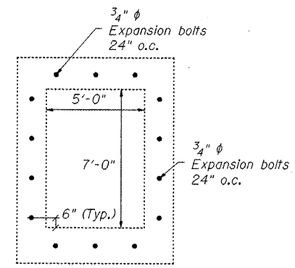

SECTION THRU EXISTING BARREL

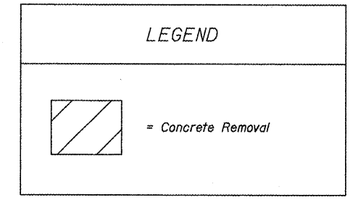

NOTES

If Resident Engineer determines existing rebar is in good condition, the j-bolts may be excluded from this contrct.

FILE NAME = miscellaneous_sheets.dgn	USER NAME = jochumsjg	DESIGNED - KJH	REVISED -	STATE OF ILLINOIS DEPARTMENT OF TRANSPORTATION	BOX CULVERT EXTENSION DETAIL STA 705+03	F.A.P RTE.	SECTION	COUNTY	TOTAL SHEETS	SHEET NO.
		DRAWN - JGJ	REVISED -			317	16W-2,RS-4;17W-1,RS-3	FULTON	240	102
	PLOT SCALE = 100.0000 ' / IN.	CHECKED - BJT	REVISED -					CONTRACT NO. 88703		
	PLOT DATE = 3/22/2010	DATE - 01-05-10	REVISED -		SCALE: SHEET NO. 2 OF 2 SHEETS STA. TO STA.	FED. ROAD DIST. NO.	ILLINOIS	FED. AID PROJECT		

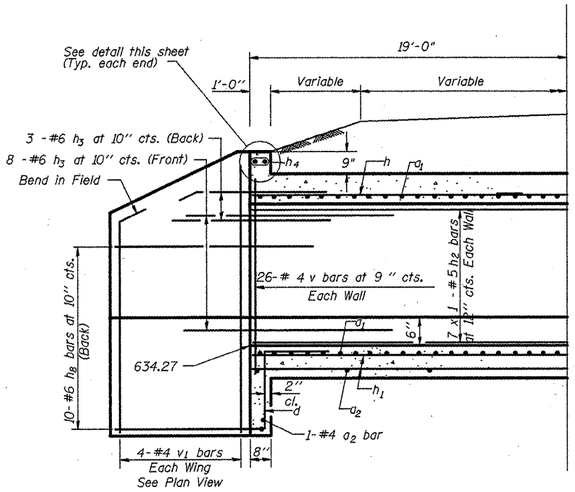

HALF LONG. SECTION

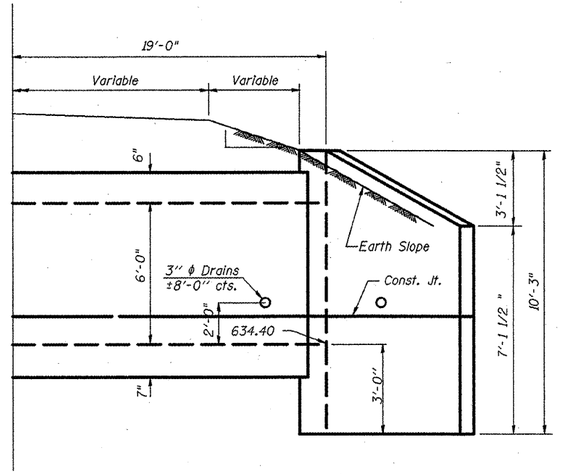

HALF ELEVATION

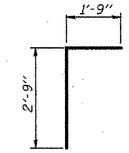

BAR d

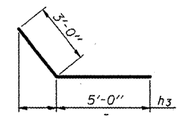

BARS h3

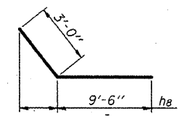

BARS h8

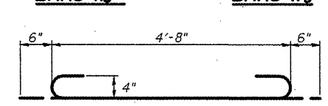

BAR a1

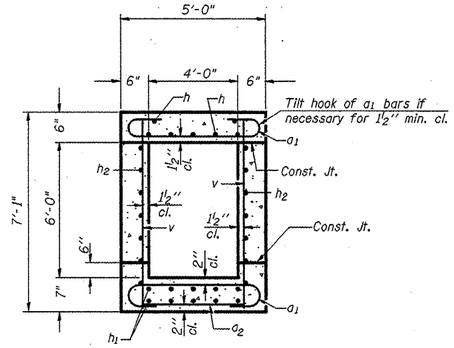

SECTION THRU BARREL

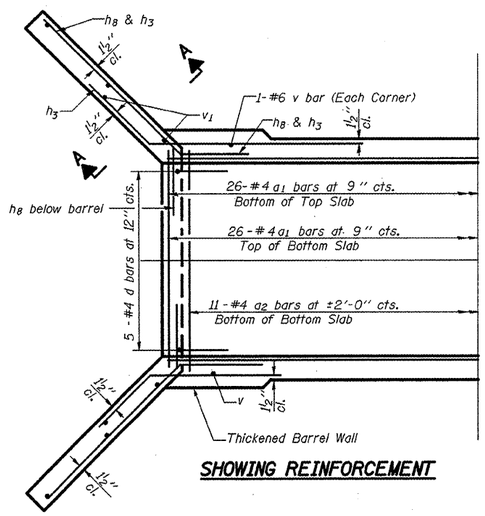

SHOWING REINFORCEMENT

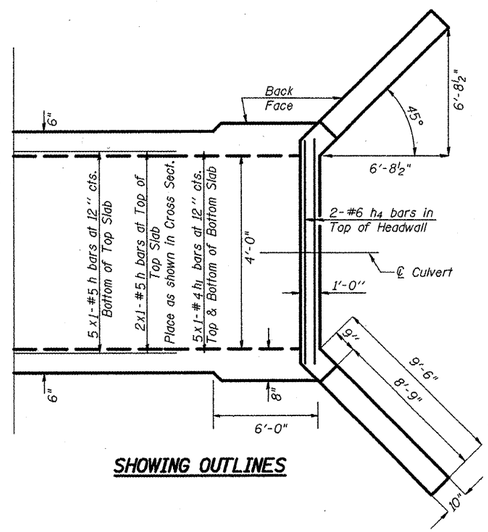

SHOWING OUTLINES

PLAN

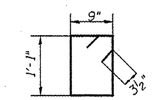

DOWNSTREAM HEADWALL DETAIL, s

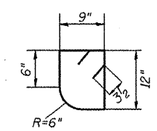

UPSTREAM HEADWALL DETAIL, s.

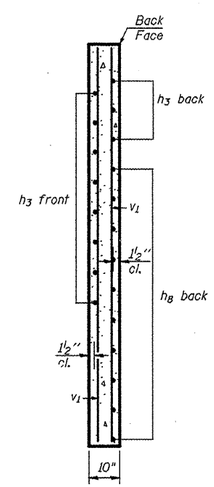

SECTION A-A

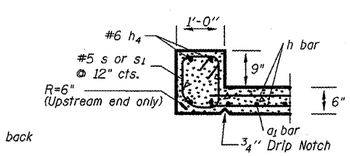

HEADWALL DETAIL

BILL OF MATERIAL

Bar	No.	Size	Length	Shape
a1	104	#4	5'-8"	
a2	24	#4	4'-8"	
d	10	#4	4'-6"	
h	14	#5	18'-8"	
h1	20	#4	18'-8"	
h2	28	#5	18'-8"	
h3	44	#6	8'-0"	
h4	4	#6	4'-8"	
h8	40	#6	12'-6"	
v	108	#4	6'-9"	
v1	16	#4	9'-11"	
s	6	#5	4'-5"	
s1	6	#5	4'-5"	
Concrete Removal			Cu. Yd.	7.2
Concrete Box Culverts			Cu. Yd.	28.3
Reinforcement Bars			Pound	3521
3/4" ϕ Expansion Bolts			Each	28
Rock Fill			Ton	97.4
Geotech Fabric			Sq Yd	46.4
Filter Fabric			Sq. Yd.	107.6
R&D Unsuitable			Cu. Yd.	47.5
Temp Soil Retention			Sq. Ft.	685.8

DESIGN STRESSES

fy = 60,000 psi
f'c = 3,500 psi

LOADING HS 20-44 & ALT.

NOTES

A distance of half the length of the wingwall but not less than six feet of the barrel shall be poured monolithically with the wingwalls.

Reinforcement Bars shall conform to the requirements of ASTM A 706 Grade 60. See Special Provisions.

Bars indicated thus 12 x 4-#5 etc. indicates 12 lines of bars with 4 lengths per line.

All construction joints shall be bonded.

SSB-H-0 10-22-04

FILE NAME = miscellaneous_sheets.dgn	USER NAME = horstkj	DESIGNED - KJH	REVISED -
		DRAWN - JGJ	REVISED -
	PLOT SCALE = 100.0000 ' / IN.	CHECKED -	REVISED -
	PLOT DATE = 4/19/2010	DATE - 01-05-10	REVISED -

STATE OF ILLINOIS
DEPARTMENT OF TRANSPORTATION

BOX CULVERT EXTENSION DETAIL STA 793+46

SCALE: | SHEET NO. 1 OF 2 SHEETS | STA. TO STA.

F.A.P RTE.	SECTION	COUNTY	TOTAL SHEETS	SHEET NO.
317	16W-2,RS-4;17W-1,RS-3	FULTON	240	103
		CONTRACT NO. 88703		
FED. ROAD DIST. NO.	ILLINOIS	FED. AID PROJECT		

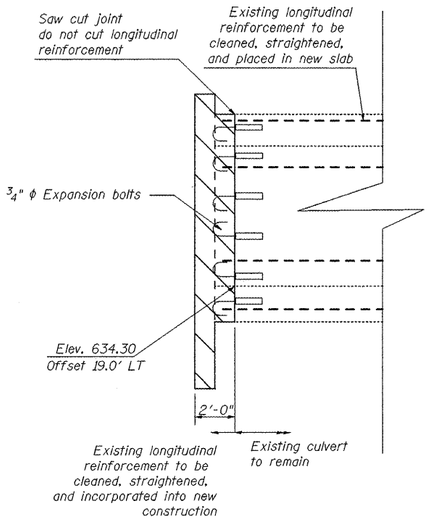

EAST CULVERT EXTENSION

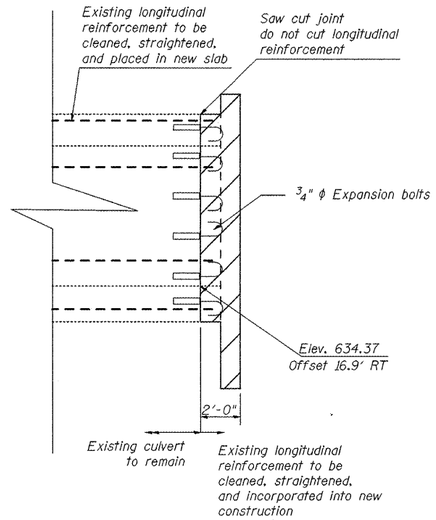

WEST CULVERT EXTENSION

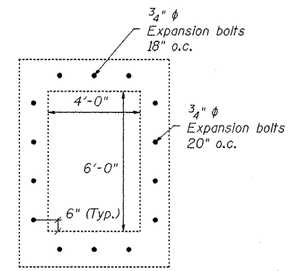

SECTION THRU EXISTING BARREL

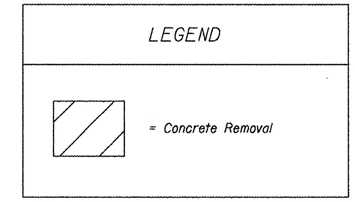

NOTES

If Resident Engineer determines existing rebar is in good condition, the j-bolts may be excluded from this contrct.

FILE NAME = miscellaneous_sheets.dgn	USER NAME = jochumsjg	DESIGNED - KJH	REVISED -	STATE OF ILLINOIS DEPARTMENT OF TRANSPORTATION	BOX CULVERT EXTENSION DETAIL STA 793+46	F.A.P RTE.	SECTION	COUNTY	TOTAL SHEETS	SHEET NO.
		DRAWN - JGJ	REVISED -			317	16W-2,RS-4;17W-1,RS-3	FULTON	240	104
	PLOT SCALE = 100.0000 ' / IN.	CHECKED - BJT	REVISED -					CONTRACT NO. 88703		
	PLOT DATE = 3/22/2010	DATE - 01-05-10	REVISED -		SCALE: SHEET NO. 2 OF 2 SHEETS STA. TO STA.	FED. ROAD DIST. NO.	ILLINOIS	FED. AID PROJECT		

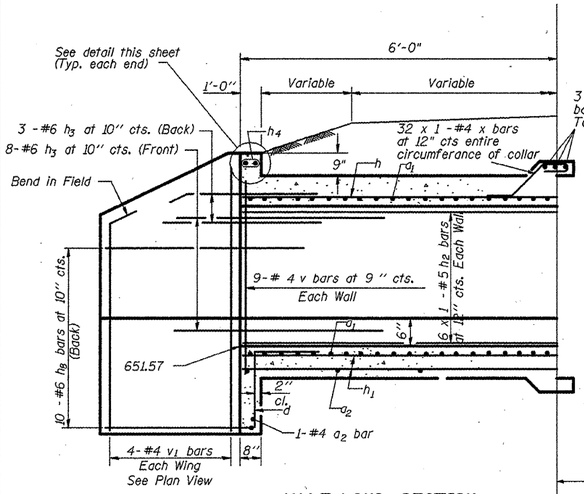

HALF LONG. SECTION

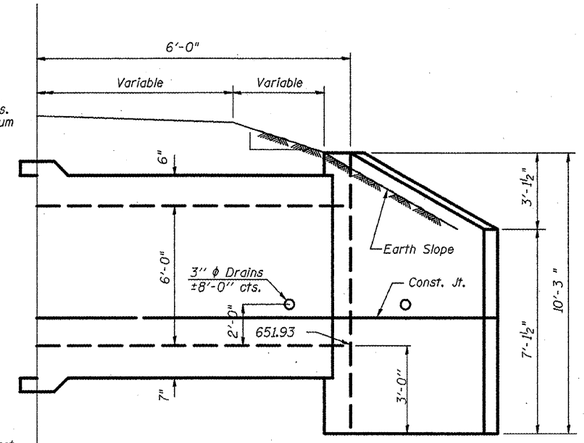

HALF ELEVATION

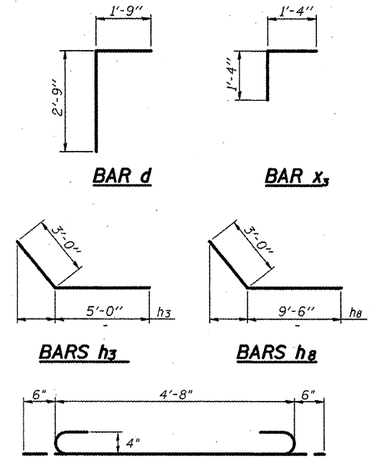

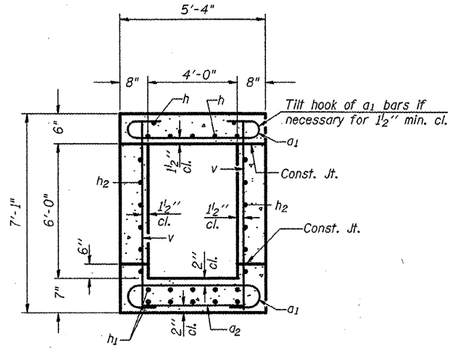

SECTION THRU BARREL

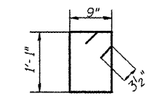

DOWNSTREAM HEADWALL DETAIL, s

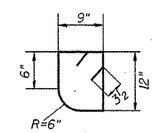

UPSTREAM HEADWALL DETAIL, s,

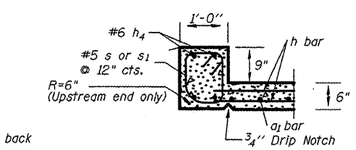

HEADWALL DETAIL

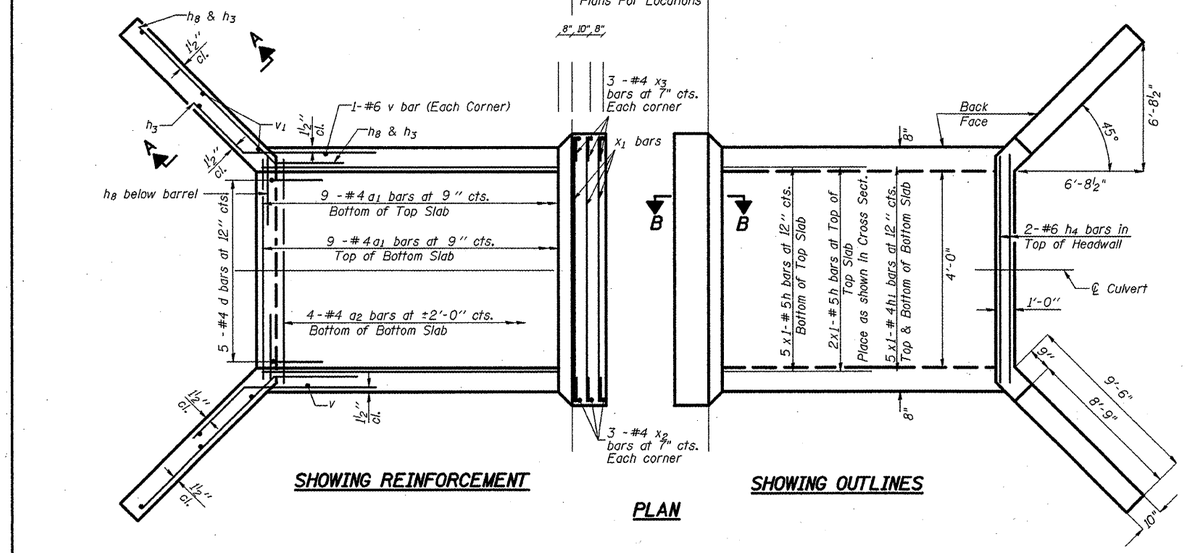

SHOWING REINFORCEMENT

SHOWING OUTLINES

PLAN

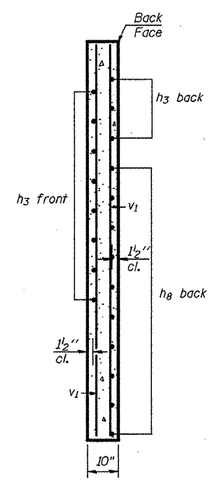

SECTION A-A

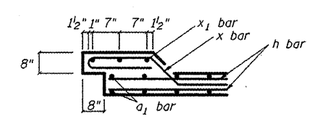

SECTION B-B

BILL OF MATERIAL

Bar	No.	Size	Length	Shape
a1	36	#4	5'-8"	
a2	10	#4	4'-8"	
d	10	#4	4'-6"	
h	14	#5	5'-8"	
h1	20	#4	5'-8"	
h2	24	#5	5'-8"	
h3	44	#6	8'-0"	
h4	4	#6	4'-8"	
h8	40	#6	12'-6"	
v	40	#4	6'-9"	
v1	16	#4	9'-11"	
s	6	#5	4'-5"	
s1	6	#5	4'-5"	
x	64	#4	5'-3"	
x1	12	#4	6'-4"	
x2	12	#4	8'-1"	
x3	24	#4	2'-8"	
Concrete Box Culverts			Cu. Yd.	21.9
Reinforcement Bars			Pound	2529
Precast Box 4x6*			Feet	60.0
Temp. Soil Retention			Sq. Ft.	330.0
Geotech Fabric			Sq. Ft.	104.0
Rock Fill			Ton	315.7
Trench Backfill			Cu. Yd.	366.0
R&D Unsuitable			Cu. Yd.	154.0
Filter Fabric			Sq. Yd.	259.2

DESIGN STRESSES

fy = 60,000 psi
f'c = 3,500 psi

*Design Fill Height of 3.0 ft. with AASHTO Designation of M259 on Precast Box Culvert

LOADING HS 20-44 & ALT.

The design of the 4 x 6 precast box shall be as required for a 6 x6 precast box, M259. Table 1 for 3 feet of fill except M shall be 48 in.

NOTES

A distance of half the length of the wingwall but not less than six feet of the barrel shall be poured monolithically with the wingwalls.

Reinforcement Bars shall conform to the requirements of ASTM A 706 Grade 60. See Special Provisions.

Bars indicated thus 12 x 4-#5 etc. indicates 12 lines of bars with 4 lengths per line.

All construction joints shall be bonded.

SSB-H-0 10-22-04

FILE NAME = miscellaneous_sheets.dgn	USER NAME = horstkj	DESIGNED - KJH	REVISED -	STATE OF ILLINOIS DEPARTMENT OF TRANSPORTATION	BOX CULVERT DETAIL STA 828+50	F.A.P RTE. 317	SECTION 16W-2,RS-4;17W-1,RS-3	COUNTY FULTON	TOTAL SHEETS 240 / SHEET NO. 105
		DRAWN - JGJ	REVISED -					CONTRACT NO. 88703	
	PLOT SCALE = 100.0000 ' / IN.	CHECKED - BJT	REVISED -			FED. ROAD DIST. NO.	ILLINOIS	FED. AID PROJECT	
	PLOT DATE = 4/19/2010	DATE - 01-05-10	REVISED -		SCALE: SHEET NO. 1 OF 1 SHEETS STA. TO STA.				

CENTRAL ILLINOIS DRILLING COMPANY
1909 OAKWOOD AVE.
BLOOMINGTON, ILLINOIS 61704
(309) 662-5968

LOG OF BORING

CONTRACTED WITH Hanson Engineers BORING NO. 674-B-1
PROJECT NAME US 24 CONTRACT NO.
LOCATION Sta. 674 + 09 (Culvert) Sta. 674+17 - 42' Rt. (Boring)
DATUM HAMMER WT. 140# HAMMER DROP 30" HOLE DIA. 8"
SURFACE ELEV. 611.0 CORE DIA. CASING
DATE STARTED 7-12-93 COMPLETED 7-12-93 DRILLING METHOD HSA

ELEV.	DESCRIPTION	STRATA DEPTH	DEPTH SCALE	SAMPLES BLOWS FT.	NO.	TYPE	RECOV.	Q_u (tsf)	ω (%)	NOTES
611.0		0.0	30							
609.1	Lt. brn. clayey silt, w/f. sand, occas. vegetative fibers	1.9		4-2-2	1	ss	17"	1.16	21	
			5	2-3-3	2	ss	18	0.62	27	WATER 7-12-93
604.1	Lt. brn. gr. mottled clayey silt, w/tr. f. sand moist	6.9								
	Lt. brn. gr. clayey silt, w/tr. f. sand, occas. f. gravel			2-3-5	3	ss	18	0.93	24	DD 7.0' 10:55am BAR DRY 1:35pm AAR 20.8' 2:00pm
			10	2-3-4	4	ss	18	0.54	26	DWL 0.5' 2:00pm 7-13-93
598.8	till moist	12.2								
				3-9-13	5	ss	18	3.1	18	
	Gr. silty clay, w/tr. f. sand, occas. f. gravel		15	13-17-23	6	ss	18	4.27	11	
				11-13-20	7	ss	18	3.49	13	
			20	7-11-20	8	ss	18	3.10	12	
590.3	till moist	20.7								

CENTRAL ILLINOIS DRILLING COMPANY
1909 OAKWOOD AVE.
BLOOMINGTON, ILLINOIS 61704
(309) 662-5968

LOG OF BORING

CONTRACTED WITH Hanson Engineers BORING NO. 674-B-1
PROJECT NAME US 24 CONTRACT NO.
LOCATION Sta. 674 + 09 (Culvert) Sta. 674+17 - 42' Rt. (Boring)
DATUM HAMMER WT. 140# HAMMER DROP 30" HOLE DIA. 8"
SURFACE ELEV. 611.0 CORE DIA. CASING
DATE STARTED 7-12-93 COMPLETED 7-12-93 DRILLING METHOD HSA

ELEV.	DESCRIPTION	STRATA DEPTH	DEPTH SCALE	SAMPLES BLOWS FT.	NO.	TYPE	RECOV.	Q_u (tsf)	ω (%)	NOTES
			30							
589.3	~~Blk. gr. weak sandstone~~ moist	21.7								
	Gr. clayey silt, w/ tr. f. sand, occas. f. gravel			5-8-12	9	ss	18"	2.91	20	
			25	5-9-11	10	ss	18	2.72	18	
				6-8-11	11	ss	18	2.33	20	
			30	7-9-10	12	ss	18	1.78	20	
				6-7-17	13	ss	18	2.91	19	
577.5	till moist	33.5								
	END OF BORING 33.5'		35							

FILE NAME = miscellaneous_sheets.dgn	USER NAME = joshumajg	DESIGNED -	REVISED -	STATE OF ILLINOIS DEPARTMENT OF TRANSPORTATION	SOIL BORINGS	F.A.P RTE.	SECTION	COUNTY	TOTAL SHEETS	SHEET NO.
		DRAWN -	REVISED -			317	16W-2,RS-4\17W-1,RS-3	FULTON	240	106
	PLOT SCALE = 100.0000 ' / IN.	CHECKED -	REVISED -					CONTRACT NO. 88703		
	PLOT DATE = 2/22/2010	DATE -	REVISED -		SCALE: SHEET NO. OF SHEETS STA. TO STA.	FED. ROAD DIST. NO.	ILLINOIS	FED. AID PROJECT		

CENTRAL ILLINOIS DRILLING COMPANY
1909 OAKWOOD AVE.
BLOOMINGTON, ILLINOIS 61704
(309) 662-5968

LOG OF BORING

CONTRACTED WITH: Hanson Engineers — BORING NO.: 674-B-2
PROJECT NAME: US 24 — CONTRACT NO.:
LOCATION: Sta. 674 + 09 (Culvert) Sta. 674 + 09 - 44' Lt. (Boring)
DATUM: — HAMMER WT.: 140# — HAMMER DROP: 30" — HOLE DIA.: 8"
SURFACE ELEV.: 609.1' — CORE DIA.: — CASING:
DATE STARTED: 7-12-93 — COMPLETED: 7-13-93 — DRILLING METHOD: HSA

ELEV.	DESCRIPTION	STRATA DEPTH	DEPTH SCALE	SAMPLES BLOWS FT.	NO.	TYPE	RECOV.	Q_u (tsf)	ω (%)	NOTES
609.1		0.0	30							
607.2	Lt. brn. gr. clayey silt, w/tr. f. sand v. moist	1.9								
	Dk. gr. silt, w/ f. sand			1-2-3	1	ss	17"	0.27	34	
			5	2-1-1	2	ss	17	0.23	32	WATER 7-12-93 & 7-13-93
603.2		5.9								
602.2	Brn. gr. clayey silt, ~~w/f. sand, occas. f.~~ gravel till moist	6.9		3-4-4	3	ss	18	0.93	24	DD 2.0' 3:10pm BAR 7.6' 6:50am AAR 4.2' 7:30am
	Lt. gr. brn. clayey silt, w/f. sand, occas. f. gravel		10	4-4-4	4	ss	18	0.97	18	DWL 0.0' 8:30am 7-14-93 Pushed 3" T 3.0'-5.0' 5.0'-7.0' w/19.0 recovery
597.2	till moist	11.9								
	Gr. silty clay, w/tr. f. sand, occas. f. gravel			5-9-15	5	ss	18	3.3	13	
			15	5-11-17	6	ss	18	3.88	11	
				55-45	7	ss	10	4.07	12	
			20	6-8-13	8	ss	18	3.49	12	

CENTRAL ILLINOIS DRILLING COMPANY
1909 OAKWOOD AVE.
BLOOMINGTON, ILLINOIS 61704
(309) 662-5968

LOG OF BORING

CONTRACTED WITH: Hanson Engineers — BORING NO.: 674-B-2
PROJECT NAME: US 24 — CONTRACT NO.:
LOCATION: Sta. 674 + 09 (Culvert) Sta. 674 + 09 - 44' Lt. (Boring)
DATUM: — HAMMER WT.: 140# — HAMMER DROP: 30" — HOLE DIA.: 8"
SURFACE ELEV.: 609.1' — CORE DIA.: — CASING:
DATE STARTED: 7-12-93 — COMPLETED: 7-13-93 — DRILLING METHOD: HSA

ELEV.	DESCRIPTION	STRATA DEPTH	DEPTH SCALE	SAMPLES BLOWS FT.	NO.	TYPE	RECOV.	Q_u (tsf)	ω (%)	NOTES
			30							
587.2	till moist	21.9								
	Gr. clayey silt, w/ tr. f. sand, occas. f. gravel			5-7-12	9	ss	6"	--	15	
584.8	till moist	24.3								
	Gr. silty clay, w/tr. f. sand, occas. f. gravel		25	8-7-12	10	ss	18	2.13	21	
				6-8-13	11	ss	18	1.78	20	
579.7	till moist	29.4								
	Gr. clayey silt, w/tr. f. sand, occas. f. gravel		30	6-9-10	12	ss	18	1.94	20	
				7-7-11	13	ss	18	2.33	21	
			35	7-8-10	14	ss	18	2.33	20	
573.1	till moist	36.0								
	END OF BORING 36.0'									

FILE NAME = miscellaneous_sheets.dgn	USER NAME = jochumsjg	DESIGNED -	REVISED -	STATE OF ILLINOIS DEPARTMENT OF TRANSPORTATION	SOIL BORINGS	F.A.P RTE. 317	SECTION 16W-2,RS-4\17W-1,RS-3	COUNTY FULTON	TOTAL SHEETS 240 / SHEET NO. 107
		DRAWN -	REVISED -					CONTRACT NO. 88703	
	PLOT SCALE = 100.0000 ' / IN.	CHECKED -	REVISED -		SCALE: SHEET NO. OF SHEETS STA. TO STA.	FED. ROAD DIST. NO.	ILLINOIS	FED. AID PROJECT	
	PLOT DATE = 2/22/2010	DATE -	REVISED -						

LOG OF BORING

CENTRAL ILLINOIS DRILLING COMPANY
1909 OAKWOOD AVE.
BLOOMINGTON, ILLINOIS 61704
(309) 662-5968

CONTRACTED WITH Hanson Engineers BORING NO. 683-B-1
PROJECT NAME US 24 CONTRACT NO.
LOCATION Sta. 683 + 30 (Culvert) Sta. 683 + 21 - 35' Rt. (Boring)
DATUM HAMMER WT. 140# HAMMER DROP 30" HOLE DIA. 8"
SURFACE ELEV. 608.6' CORE DIA. CASING
DATE STARTED 7-13-93 COMPLETED 7-13-93 DRILLING METHOD HSA

ELEV.	DESCRIPTION	STRATA DEPTH	DEPTH SCALE	BLOWS FT.	NO.	TYPE	RECOV.	Q_u (tsf)	ω (%)	NOTES
608.6		0.0	30							
606.8	Brn. silt, w/clay, tr. f. sand, occas. f. gravel moist	1.8								
604.2	Gr. silt, w/tr. clay, f. sand moist	4.4		2-2-1	1	ss	17"	1.01	27	WATER 7-13-93
	Lt. brn. clayey silt, w/tr. f. sand, occas. f. gravel, silt-stone seams		5	3-2-4	2	ss	18	1.24	20	DD DRY 2:00pm BAR DRY 2:00pm AAR DCI 29.1' 2:
				11-12-18	3	ss	18	1.2	17	DWL 0.6' 2:15pm 7-14-93
599.3	till moist	9.3								
	Gr. silty clay, w/ tr. f. sand, occas. f. gravel		10	10-12-12	4	ss	18	2.27	12	
596.7	till moist	11.9								
	Gr. clayey silt, w/tr. f. sand, occas. f. gravel			5-5-11	5	ss	18	2.68	13	
594.2	till moist	14.4								
	Gr. brn. silty clay, w/tr. f. sand, occas. f.m. gravel, cobble		15	7-8-11	6	ss	18	3.5	14	
				6-9-11	7	ss	18	2.89	13	
			20	5-8-11	8	ss	18	3.92	13	

LOG OF BORING

CENTRAL ILLINOIS DRILLING COMPANY
1909 OAKWOOD AVE.
BLOOMINGTON, ILLINOIS 61704
(309) 662-5968

CONTRACTED WITH Hanson Engineers BORING NO. 683-B-1
PROJECT NAME US 24 CONTRACT NO.
LOCATION Sta. 683 + 30 (Culvert) Sta. 683 + 21 - 35' Rt. (Boring)
DATUM HAMMER WT. 140# HAMMER DROP 30" HOLE DIA. 8"
SURFACE ELEV. 608.6' CORE DIA. CASING
DATE STARTED 7-13-93 COMPLETED 7-13-93 DRILLING METHOD HSA

ELEV.	DESCRIPTION	STRATA DEPTH	DEPTH SCALE	BLOWS FT.	NO.	TYPE	RECOV.	Q_u (tsf)	ω (%)	NOTES
			30							
				8-10-15	9	ss	18"	4.12	13	
582.7	till moist	25.9	25							
	Brn. clayey silt, w/tr. f. sand, occas. f. c. gravel, cobble			10-16-24	10	ss	18	2.89	12	
579.2	till moist	29.4		12-14-16	11	ss	11	---	15	
	Gr. silty clay, w/ weathered shale		30							
577.6	moist	31.0								
	END OF BORING 31.0'			11-30-41	12	ss	18	4.33	11	
			35							

FILE NAME = miscellaneous_sheets.dgn	USER NAME = joshumsjg	DESIGNED -	REVISED -	STATE OF ILLINOIS DEPARTMENT OF TRANSPORTATION	SOIL BORINGS	F.A.P RTE.	SECTION	COUNTY	TOTAL SHEETS	SHEET NO.
		DRAWN -	REVISED -			317	16W-2,RS-4;17W-1,RS-3	FULTON	240	108
	PLOT SCALE = 100.0000 ' / IN.	CHECKED -	REVISED -					CONTRACT NO. 88703		
	PLOT DATE = 2/22/2010	DATE -	REVISED -		SCALE: SHEET NO. OF SHEETS STA. TO STA.	FED. ROAD DIST. NO.	ILLINOIS	FED. AID PROJECT		

CENTRAL ILLINOIS DRILLING COMPANY
1909 OAKWOOD AVE.
BLOOMINGTON, ILLINOIS 61704
(309) 662-5968

LOG OF BORING

CONTRACTED WITH Hanson Engineers BORING NO. 683-B-2
PROJECT NAME US 24 CONTRACT NO.
LOCATION Sta. 683 + 30 (Culvert) Sta. 683+30 - 32' Lt. (Boring)
DATUM HAMMER WT. 140# HAMMER DROP 30" HOLE DIA. 8"
SURFACE ELEV. 610.7' CORE DIA. CASING
DATE STARTED 7-13-93 COMPLETED 7-13-93 DRILLING METHOD HSA

ELEV.	DESCRIPTION	STRATA DEPTH	DEPTH SCALE	SAMPLES BLOWS FT.	NO.	TYPE	RECOV.	Q_u (tsf)	w (%)	NOTES
610.7		0.0	30							
	Lt. brn. lt. gr. silt, w/clay, tr. f. sand, organic fibers			2-1-2	1	ss	18"	1.24	24	
605.9	v. moist	4.8	5	1-2-1	2	ss	18	0.62	27	WATER 7-13-93
	Lt. brn. silt, w/tr. f. sand, clay									DD 9.0' 10:05am BAR 24.1' 11:05a AAR 20.4' 11:40a
603.8	moist	6.9		4-6-8	3	ss	18	1.24	14	DWL 1.1' 11:40am 7-14-93
	Lt. brn. gr. clayey silt, w/tr. f. sand, occas. f. gravel									
601.3	till moist	9.4	10	10-13-20	4	ss	18	3.88	11	
	Gr. silty clay w/tr. f. sand, occas. f. gravel			7-8-11	5	ss	18	3.1	12	
			15	4-7-9	6	ss	18	2.33	13	
				5-7-9	7	ss	18	2.91	12	
			20	5-9-10	8	ss	18	2.72	14	

CENTRAL ILLINOIS DRILLING COMPANY
1909 OAKWOOD AVE.
BLOOMINGTON, ILLINOIS 61704
(309) 662-5968

LOG OF BORING

CONTRACTED WITH Hanson Engineers BORING NO. 683-B-2
PROJECT NAME US 24 CONTRACT NO.
LOCATION Sta. 683 + 30 (Culvert) Sta. 683+30 - 32' Lt. (Boring)
DATUM HAMMER WT. 140# HAMMER DROP 30" HOLE DIA. 8"
SURFACE ELEV. 610.7' CORE DIA. CASING
DATE STARTED 7-13-93 COMPLETED 7-13-93 DRILLING METHOD HSA

ELEV.	DESCRIPTION	STRATA DEPTH	DEPTH SCALE	SAMPLES BLOWS FT.	NO.	TYPE	RECOV.	Q_u (tsf)	w (%)	NOTES
			30							
589.0	till moist	21.7								
	Lt. gr. brn. silty clay, w/f. sand, occas. f. gravel, sand pockets			6-8-12	9	ss	18"	3.3	15	
			25	7-11-17	10	ss	18	4.65	13	
582.2	till moist	28.5		9-15-24	11	ss	18	4.85	15	
			30							
	END OF BORING 28.5'									

FILE NAME = miscellaneous_sheets.dgn	USER NAME = jochumsjg	DESIGNED -	REVISED -	STATE OF ILLINOIS DEPARTMENT OF TRANSPORTATION	SOIL BORINGS	F.A.P RTE.	SECTION	COUNTY	TOTAL SHEETS	SHEET NO.
		DRAWN -	REVISED -			317	16W-2,RS-4;17W-1,RS-3	FULTON	240	109
	PLOT SCALE = 100.0000 ' / IN.	CHECKED -	REVISED -					CONTRACT NO. 88703		
	PLOT DATE = 2/22/2010	DATE -	REVISED -		SCALE: SHEET NO. OF SHEETS STA. TO STA.	FED. ROAD DIST. NO.	ILLINOIS	FED. AID PROJECT		

CENTRAL ILLINOIS DRILLING COMPANY
1909 OAKWOOD AVE.
BLOOMINGTON, ILLINOIS 61704
(309) 662-5968

LOG OF BORING

CONTRACTED WITH Hanson Engineers BORING NO. 705-B-1
PROJECT NAME US 24 CONTRACT NO.
LOCATION Sta 705 + 03 (Culvert) Sta. 705 + 27 - 89' Rt. (Boring)
DATUM HAMMER WT. 140# HAMMER DROP 30" HOLE DIA. 8"
SURFACE ELEV. 600.4' CORE DIA. CASING
DATE STARTED 7-15-93 COMPLETED 7-15-93 DRILLING METHOD HSA

ELEV.	DESCRIPTION	STRATA DEPTH	DEPTH SCALE	SAMPLES BLOWS FT.	NO.	TYPE	RECOV.	Q_u (ksf)	w (%)	NOTES
600.4		0.0	30							
598.5	Lt. brn. silt, w/tr. f. sand, root hairs, vegetative fibers moist	1.9								
596.0	Lt. brn. lt. gr. silt, w/tr. f. sand moist	4.4		3-2-4	1	ss	18"	0.82	29	WATER 7-15-93
594.7	Gr. clayey silt, w/f. sand, weathered shale moist	5.7	5	3-2-11	2	ss	18	0.62	19	DD DRY 8:20am BAR DRY 8:20am AAR DCI 8.1' 8:
593.8	Gr. weathered shale moist	6.6								
	Lt. gr. shale			43-57/3	3	ss	9	--	8	DWL 0.5 8:35am 7-16-93
			10	82-18/1"	4	ss	7	--	9	
588.0	moist	12.4		100/5½	5	ss	5½	--	9	
	END OF BORING 12.4'		15							

CENTRAL ILLINOIS DRILLING COMPANY
1909 OAKWOOD AVE.
BLOOMINGTON, ILLINOIS 61704
(309) 662-5968

LOG OF BORING

CONTRACTED WITH Hanson Engineers BORING NO. 705-B-2
PROJECT NAME US 24 CONTRACT NO.
LOCATION Sta. 705 + 03 (Culvert) Sta. 704 + 63 - 49' Lt. (Boring)
DATUM HAMMER WT. 140# HAMMER DROP 30" HOLE DIA. 8"
SURFACE ELEV. 606.6' CORE DIA. CASING
DATE STARTED 7-15-93 COMPLETED 7-15-93 DRILLING METHOD HSA

ELEV.	DESCRIPTION	STRATA DEPTH	DEPTH SCALE	SAMPLES BLOWS FT.	NO.	TYPE	RECOV.	Q_u (ksf)	w (%)	NOTES
606.6		0.0	30							
602.3	1.1" dk. brn. brn. clayey silt, lt. brn. clayey silt, root hairs moist	4.3		3-2-6	1	ss	14"	0.49	27	
599.7	Brn. dk. brn. clayey silt, w/tr. f. sand moist	6.9	5	2-3-4	2	ss	18	0.66	25	WATER 7-15-93
										DD 7.0' 11:10am BAR 14.9' 11:30a AAR 8.9' 12:00pm
597.0	Gr. clayey silt, w/tr f. sand, occas. f. gravel	9.6		4-5-4	3	ss	18	0.54	22	DWL 0.6' 12:00pm 7-16-93
594.7	Lt. gr. weathered shale, w/clay moist	11.9	10	25-40-60/7"	4	ss	18	--	14	Pushed 3"T 1.0'-19" recovery B#705-B-2A
	Lt. gr. shale			90-10/½"	5	ss	6½	--	14	
591.7	moist	14.9	15	100/5"	6	ss	5	--	14	
	END OF BORING 14.9'		20							

FILE NAME = miscellaneous_sheets.dgn	USER NAME = jschumsjg	DESIGNED -	REVISED -	STATE OF ILLINOIS DEPARTMENT OF TRANSPORTATION	SOIL BORINGS	F.A.P RTE.	SECTION	COUNTY	TOTAL SHEETS	SHEET NO.
		DRAWN -	REVISED -			317	16W-2,RS-4;17W-1,RS-3	FULTON	240	110
	PLOT SCALE = 100.0000 ' / IN.	CHECKED -	REVISED -					CONTRACT NO. 88703		
	PLOT DATE = 2/22/2010	DATE -	REVISED -		SCALE: SHEET NO. OF SHEETS STA. TO STA.	FED. ROAD DIST. NO.	ILLINOIS	FED. AID PROJECT		

Illinois Department of Transportation
Division of Highways
GSG Consultants, Inc.

SOIL BORING LOG

Page 1 of 1

Date 1/21/10

ROUTE FAP 317 (US 24) DESCRIPTION US 24 Between Summum and Astoria - WB Lane LOGGED BY KS

SECTION 16W-2, RS-4; 17W-1, RS-3 LOCATION Woodland Road District, SEC. 9, TWP. 3N, RNG. 2E, 4th PM, Latitude N40° 15' 4.06", Longitude W90° 17' 39.01"

COUNTY Fulton DRILLING METHOD HSA HAMMER TYPE AUTO

STRUCT. NO. -
Station -

BORING NO. B-1
Station 715+10
Offset 13.00ft RT
Ground Surface Elev. 617.20 ft

Surface Water Elev. NONE ft
Stream Bed Elev. NA ft

Groundwater Elev.:
First Encounter NONE ft
Upon Completion NONE ft
After NONE Hrs. NONE ft

Description	Elev.	DEPTH (ft)	BLOWS (/6")	UCS Qu (tsf)	MOIST (%)
14 Inches Aggregate Shoulder	615.90				
Soft to Very Stiff Brown, Moist LOAM, little gravel			0		
			1	0.4	26
			1	B	
			1		
			1	1.8	24
		-5	1	B	
			5		
	610.20		6	2.3	22
Very Stiff to Stiff Brown to Gray, Moist SILTY CLAY LOAM, little gravel			7	B	
			6		
			6	2.0	21
		-10	7	B	
			3		
			6	3.9	24
			6	B	
			3		
			4	1.5	28
		-15	3	B	
			3		
	600.20		2	2.0	24
Stiff Brown to Olive, Moist SILTY CLAY LL: 51, PL: 22			4	B	
	598.20		2		
			3	1.0	24
		-20	4	B	

Description	Elev.	DEPTH (ft)	BLOWS (/6")	UCS Qu (tsf)	MOIST (%)
Stiff Gray, Moist SILTY LOAM, trace gravel			25		
	595.20		50		14
End of Boring			100/2"		
		-25			
		-30			
		-35			
		-40			

The Unconfined Compressive Strength (UCS) Failure Mode is indicated by (B-Bulge, S-Shear, P-Penetrometer)
The SPT (N value) is the sum of the last two blow values in each sampling zone (AASHTO T206)

BBS, form 137 (Rev. 8-99)

Illinois Department of Transportation
Division of Highways
GSG Consultants, Inc.

SOIL BORING LOG

Page 1 of 1

Date 1/21/10

ROUTE FAP 317 (US 24) DESCRIPTION US 24 Between Summum and Astoria - EB Lane LOGGED BY KS

SECTION 16W-2, RS-4; 17W-1, RS-3 LOCATION Woodland Road District, SEC. 9, TWP. 3N, RNG. 2E, 4th PM, Latitude N40° 15' 4.17", Longitude W90° 17' 37.96"

COUNTY Fulton DRILLING METHOD HSA HAMMER TYPE AUTO

STRUCT. NO. -
Station -

BORING NO. B-2
Station 714+92
Offset 14.00ft LT
Ground Surface Elev. 617.10 ft

Surface Water Elev. NONE ft
Stream Bed Elev. NA ft

Groundwater Elev.:
First Encounter NONE ft
Upon Completion NONE ft
After NONE Hrs. NONE ft

Description	Elev.	DEPTH (ft)	BLOWS (/6")	UCS Qu (tsf)	MOIST (%)
12 Inches Aggregate Shoulder	616.10				
Very Stiff to Stiff Brown, Moist LOAM, trace gravel			2		
			3	2.1	25
			4	B	
			2		
			3	1.8	23
		-5	3	B	
			3		
	610.10		3	1.8	22
Stiff to Very Stiff Brown to Gray, Moist SILTY CLAY LOAM, trace gravel LL: 45, PL: 23 A-7-6 (24)			5	B	
			2		
			3	1.2	24
		-10	3	B	
			3		
			3	2.4	29
			3	B	
			3		
			5	2.0	21
	602.10	-15	6	B	
Stiff Brown to Olive, Moist SILTY CLAY			3		
			4	1.5	26
			5	B	
	599.10				
			2		
			3	0.4	25
		-20	2	B	

Description	Elev.	DEPTH (ft)	BLOWS (/6")	UCS Qu (tsf)	MOIST (%)
Soft Gray, Moist SILTY LOAM, little gravel, trace organics LL:31, PL: 20 A-6 (6)	595.60		35		
			100/3"		7
Very Soft Field Hardness Dark Gray SHALE					
Core Run 1 - 23' to 28' RQD = 0, Recovery = 20% Core Time = 10 min/ft		-25			
	589.10				
End of Boring					
		-30			
		-35			
		-40			

The Unconfined Compressive Strength (UCS) Failure Mode is indicated by (B-Bulge, S-Shear, P-Penetrometer)
The SPT (N value) is the sum of the last two blow values in each sampling zone (AASHTO T206)

BBS, form 137 (Rev. 8-99)

SOIL BORING LOGS

FILE NAME = d488703-sht-blog.dgn	USER NAME = horstkj	DESIGNED -	REVISED -
		DRAWN - HZS - IDOT	REVISED -
	PLOT SCALE = 3.6000 ' / IN.	CHECKED -	REVISED -
	PLOT DATE = 2/23/2010	DATE -	REVISED -

STATE OF ILLINOIS
DEPARTMENT OF TRANSPORTATION

SOIL BORING LOGS

SCALE: SHEET NO. OF SHEETS STA. 1080+00 TO STA. 1094+20

F.A.P. RTE.	SECTION	COUNTY	TOTAL SHEETS	SHEET NO.
317	16W-2, RS-4;17W-1,RS-3	FULTON	240	111

CONTRACT NO. 88703

ILLINOIS FED. AID PROJECT

CENTRAL ILLINOIS DRILLING COMPANY
1909 OAKWOOD AVE.
BLOOMINGTON, ILLINOIS 61704
(309) 662-5968

LOG OF BORING

CONTRACTED WITH Hanson Engineers BORING NO. 733-B-1
PROJECT NAME US 24 CONTRACT NO.
LOCATION Sta. 733 + 65 (Culvert) Sta. 733+80 - 22' Rt. (Boring)
DATUM HAMMER WT. 140# HAMMER DROP 30" HOLE DIA. 8"
SURFACE ELEV. 647.5 CORE DIA. CASING
DATE STARTED 7-20-93 COMPLETED 7-20-93 DRILLING METHOD HSA

ELEV.	DESCRIPTION	STRATA DEPTH	DEPTH SCALE	SAMPLES BLOWS FT.	NO.	TYPE	RECOV.	Qu (tsf)	ω (%)	NOTES
647.5		0.0	30							
646.5	See #A	1.0								#A Blk. brn. clayey silt, mix w/f.c. sand, gra roots moist fill-disturbed
	Yel. brn. silt, some clay, tr. f.m. sand			2-3-4	1	ss	18"	0.99	30	
643.6	loess moist	3.9		1-2-1	2	ss	16	0.29	31	
	Yel. brn. brn. lt. gray mottled silt, some clay, tr. dk. brn. iron stains		5							WATER 7-20-93
640.3	loess v. moist wet	7.2		3-4-5	3	ss	18	0.37	25	DD DRY 2:20pm BAR DRY 2:20pm AAR DRY 2:40pm
	Lt. gray-yel. brn. mottled silt			4-5-7	4	ss	18	0.82	25	DWL 14.5' 2:40pm 7-21-93
			10							
635.5	loess moist	12.0		3-4-4	5	ss	18	0.62	28	
	Brn. gray mottled clayey silt, tr. dk. brn. iron stains			3-4-5	6	ss	18	0.82	26	
			15							
630.7	loess moist	16.8		3-4-4	7	ss	18	1.07	24	
	Brn. & gray mottled clayey silt, tr. f.c. sand, tr. f.c. gravel			3-3-3	8	ss	18	1.03	35	
			20							

CENTRAL ILLINOIS DRILLING COMPANY
1909 OAKWOOD AVE.
BLOOMINGTON, ILLINOIS 61704
(309) 662-5968

LOG OF BORING

CONTRACTED WITH Hanson Engineers BORING NO. 733-B-1
PROJECT NAME US 24 CONTRACT NO.
LOCATION Sta. 733 + 65 (Culvert) Sta. 733+80 - 22' Rt. (Boring)
DATUM HAMMER WT. 140# HAMMER DROP 30" HOLE DIA. 8"
SURFACE ELEV. 647.5' CORE DIA. CASING
DATE STARTED 7-20-93 COMPLETED 7-20-93 DRILLING METHOD HSA

ELEV.	DESCRIPTION	STRATA DEPTH	DEPTH SCALE	SAMPLES BLOWS FT.	NO.	TYPE	RECOV.	Qu (tsf)	ω (%)	NOTES
			30							
624.5	till moist	23.0		3-4-4	9	ss	18"	0.95	24	
	Yel. brn. clayey silt, tr. f.c. sand, tr. f.m. gravel, tr. coal			5-7-8	10	ss	18	1.40	18	
			25							
	till moist	26.4		7-10-16	11	ss	18	3.09	25	
	Brn. gray mottled clayey silt, tr. f.c. sand, tr. f.c. gravel, tr. coal, occas. shale									
617.5	till	30.0		7-11-15	12	ss	18	3.92	15	
			30							
	END OF BORING 30.0'									

FILE NAME = miscellaneous_sheets.dgn	USER NAME = jschums,jg	DESIGNED -	REVISED -	STATE OF ILLINOIS DEPARTMENT OF TRANSPORTATION	SOIL BORINGS	F.A.P. RTE.	SECTION	COUNTY	TOTAL SHEETS / SHEET NO.
		DRAWN -	REVISED -			317	16W-2,RS-4;17W-1,RS-3	FULTON	240 / 112
	PLOT SCALE = 100.0000 ' / IN.	CHECKED -	REVISED -					CONTRACT NO. 88703	
	PLOT DATE = 2/22/2010	DATE -	REVISED -		SCALE: SHEET NO. OF SHEETS STA. TO STA.	FED. ROAD DIST. NO.	ILLINOIS	FED. AID PROJECT	

LOG OF BORING

CENTRAL ILLINOIS DRILLING COMPANY
1909 OAKWOOD AVE.
BLOOMINGTON, ILLINOIS 61704
(309) 662-5968

CONTRACTED WITH: Hanson Engineers — BORING NO.: 733-B-2
PROJECT NAME: US 24 — CONTRACT NO.:
LOCATION: Sta 733+65 (Culvert) Sta. 733+55 - 41' Lt. (Boring)
DATUM: — HAMMER WT.: 140# — HAMMER DROP: 30" — HOLE DIA.: 8"
SURFACE ELEV.: 647.7' — CORE DIA.: — CASING:
DATE STARTED: 8-11-93 — COMPLETED: 8-11-93 — DRILLING METHOD: HSA

ELEV.	DESCRIPTION	STRATA DEPTH	DEPTH SCALE	BLOWS FT.	NO.	TYPE	RECOV.	Qu (tsf)	ω (%)	NOTES
647.7		0.0	30							#A Brn. clayey silt, w/tr. f. sand, root hairs topsoil moist
647.3	See #A	0.4								
	Lt. brn. clayey silt w/tr. f. sand			3-4-4	1	ss	16"	1.15	26	
642.8	moist	4.9	5	3-4-6	2	ss	18	0.66	25	WATER 8-11-93
	Lt. brn. lt. gr. silt, w/f. sand			3-4-6	3	ss	18	0.66	26	DD 31.8' 3:05pm BAR 34.2' 3:25pm AAR 26.5' 4:05pm DWL 13.2' 12:05pm
			10	4-5-5	4	ss	18	--	26	
635.4	moist	12.3								
	Lt. brn. silt, w/f. sand			2-3-4	5	ss	18	0.62	26	
632.6	moist	15.1	15	2-3-4	6	ss	18	1.07	26	
	Lt. brn. mottled clayey silt, w/tr. f. sand									
630.8	moist	16.9								
	Lt. gr. brn. clayey silt, w/tr. f. sand, occas. f. gravel blk. mottling			3-4-5	7	ss	18	1.32	25	
			20	3-3-4	8	ss	18	0.91	30	

LOG OF BORING

CENTRAL ILLINOIS DRILLING COMPANY
1909 OAKWOOD AVE.
BLOOMINGTON, ILLINOIS 61704
(309) 662-5968

CONTRACTED WITH: Hanson Engineers — BORING NO.: 733-B-2
PROJECT NAME: US 24 — CONTRACT NO.:
LOCATION: Sta 733+65 (Culvert) Sta. 733+55 - 41' Lt. (Boring)
DATUM: — HAMMER WT.: 140# — HAMMER DROP: 30" — HOLE DIA.: 8"
SURFACE ELEV.: 647.7' — CORE DIA.: — CASING:
DATE STARTED: 8-11-93 — COMPLETED: 8-11-93 — DRILLING METHOD: HSA

ELEV.	DESCRIPTION	STRATA DEPTH	DEPTH SCALE	BLOWS FT.	NO.	TYPE	RECOV.	Qu (tsf)	ω (%)	NOTES
			30							
				4-4-4	9	ss	18"	1.40	23	
			25	5-6-8	10	ss	18	1.90	17	
				4-4-10	11	ss	18	2.89	15	
619.5	till moist	28.2								
	Lt. gr. lt. brn. silty clay, w/f. sand, occas. f.m. gravel, silty f. sand lenses		30	6-9-13	12	ss	18	3.40	16	
615.7	till moist	32.0								
	Lt. brn. silty f. sand, w/f. gravel			8-17-24	13	ss	18	3.30	16	
613.6	wet	34.1								
	Gr. silty clay, w/ tr. f. sand, occas. f. gravel		35	7-11-13	14	ss	18	2.89	13	
611.7	till moist	36.0								
	END OF BORING 36.0'		40							

FILE NAME = miscellaneous_sheets.dgn	USER NAME = jochums.jg	DESIGNED -	REVISED -	STATE OF ILLINOIS DEPARTMENT OF TRANSPORTATION	SOIL BORINGS	F.A.P. RTE.	SECTION	COUNTY	TOTAL SHEETS	SHEET NO.
		DRAWN -	REVISED -			317	16W-2,RS-4;17W-1,RS-3	FULTON	240	113
	PLOT SCALE = 100.0000 ' / IN.	CHECKED -	REVISED -					CONTRACT NO. 88703		
	PLOT DATE = 2/22/2010	DATE -	REVISED -		SCALE: SHEET NO. OF SHEETS STA. TO STA.	FED. ROAD DIST. NO.	ILLINOIS	FED. AID PROJECT		

CENTRAL ILLINOIS DRILLING COMPANY
1909 OAKWOOD AVE.
BLOOMINGTON, ILLINOIS 61704
(309) 662-5968

LOG OF BORING

CONTRACTED WITH Hanson Engineers BORING NO. 743-B-1
PROJECT NAME US 24 CONTRACT NO.
LOCATION Sta. 743 + 25 (Culvert) Sta. 743 + 25 - 50' Rt. (Boring)
DATUM HAMMER WT. 140# HAMMER DROP 30" HOLE DIA. 8"
SURFACE ELEV. 634.9' CORE DIA. CASING
DATE STARTED 7-20-93 COMPLETED 7-20-93 DRILLING METHOD HSA

ELEV.	DESCRIPTION	STRATA DEPTH	DEPTH SCALE	BLOWS FT.	NO.	TYPE	RECOV.	Q_u (tsf)	ω (%)	NOTES
634.9		0.0	30							
633.0	Lt. brn. silt, w/tr. f. sand, clay, root hairs moist	1.9								
630.6	Lt. brn. lt.gr. mottled silt, w.tr, clay, f. sand moist	4.3		2-3-4	1	ss	17"	0.58	31	
628.0	Lt. brn. clayey silt, w/tr. f. sand, occas. f. gravel moist	6.9	5	3-5-9	2	ss	18	2.06	22	WATER 7-20-93
	Lt. brn. mottled silty clay, w/tr. f. sand, occas. f. gravel, sandstone pockets			6-6-8	3	ss	18	1.81	19	DD 24.5' 6:10am BAR 17.2' 6:30pm AAR 14.8' 6:55am
			10	3-4-6	4	ss	18	1.03	19	DWL 1.8' 6:55am 7-21-93
				3-8-11	5	ss	18	2.27	15	
620.5	moist	14.4								
	Lt. brn. mottled silty clay, w/tr. f. sand, occas. f. gravel sandstone		15	3-11-11	6	ss	18	3.09	15	
618.0	till moist	16.9								
	Gr. silty clay, w/tr. f. sand, occas. f. gravel			7-8-12	7	ss	18	2.68	15	
			20	7-9-13	8	ss	18	2.89	–	

CENTRAL ILLINOIS DRILLING COMPANY
1909 OAKWOOD AVE.
BLOOMINGTON, ILLINOIS 61704
(309) 662-5968

LOG OF BORING

CONTRACTED WITH Hanson Engineers BORING NO. 743-B-1
PROJECT NAME US 24 CONTRACT NO.
LOCATION Sta. 743 + 25 (Culvert) Sta. 743 + 25 - 50' Rt. (Boring)
DATUM HAMMER WT. 140# HAMMER DROP 30" HOLE DIA. 8"
SURFACE ELEV. 634.9' CORE DIA. CASING
DATE STARTED 7-20-93 COMPLETED 7-20-93 DRILLING METHOD HSA

ELEV.	DESCRIPTION	STRATA DEPTH	DEPTH SCALE	BLOWS FT.	NO.	TYPE	RECOV.	Q_u (tsf)	ω (%)	NOTES
			30							
611.1	till moist	23.8		10-12-17	9	ss	18"	3.71	13	
	Blk. gr. sandy shale		25	23-77/5	10	ss	11	--	20	
607.3	moist	27.6		80-20/½	11	ss	6½	--	18	
	END OF BORING 27.6'		30							
			35							

FILE NAME = miscellaneous_sheets.dgn	USER NAME = jochumsjg	DESIGNED -	REVISED -	STATE OF ILLINOIS DEPARTMENT OF TRANSPORTATION	SOIL BORINGS	F.A.P RTE.	SECTION	COUNTY	TOTAL SHEETS / SHEET NO.
		DRAWN -	REVISED -			317	16W-2,RS-4;17W-1,RS-3	FULTON	240 / 114
	PLOT SCALE = 100.0000 ' / IN.	CHECKED -	REVISED -					CONTRACT NO. 88703	
	PLOT DATE = 2/22/2010	DATE -	REVISED -		SCALE: SHEET NO. OF SHEETS STA. TO STA.	FED. ROAD DIST. NO.	ILLINOIS	FED. AID PROJECT	

RECORD OF SOIL EXPLORATION

Contracted With: IDOT
Project Name: US Route 24
Location: Astoria, Illinois
Station: 743+25 (Culvert) Sta. 743+25 – 40' Lt. (Boring)
Boring Method: Hand Auger
Weather & Temp.: Clear – 50's
Engineer: CEB, RJM

Boring #: 743 – B–2
Job #: 93S3020
Surface Elevation: 631.5
Sampling Method: 2" Shelby Tube
Water Depth: –
Date: Start 11/1/93
Finish 11/1/93

STRATUM DEPTH From	STRATUM DEPTH To	SOIL CLASSIFICATION	SAMPLE NUMBER	SAMPLE DEPTH From	SAMPLE DEPTH To	Qu (TONS/SQ. FT)	ω (%)
0	4.0	Dark gray brown silty clay	1	2.5	3.5	0.29	36
4.0	6.5	Dark gray brown clayey silt	2	4.0	5.0	0.71	30
	6.5	End of boring	3	5.5	6.5	0.25	38

General Remarks: Boring terminated at 6.5 ft because auger hole would not stay open due to wet, sloughing silt soil. Soil sample number 3 appeared to recover the wet soil that sloughed into the hole.

LOG OF BORING

CENTRAL ILLINOIS DRILLING COMPANY
1909 OAKWOOD AVE.
BLOOMINGTON, ILLINOIS 61704
(309) 662-5068

CONTRACTED WITH: Hanson Engineers
BORING NO.: 772-B-1
PROJECT NAME: US 24
CONTRACT NO.:
LOCATION: Sta 772+97 (Culvert) Sta. 773+12 – 33' Rt. (Boring)
DATUM:
HAMMER WT.: 140#
HAMMER DROP: 30"
HOLE DIA.: 8"
SURFACE ELEV.: 655.9'
CORE DIA.:
CASING:
DATE STARTED: 8-12-93
COMPLETED: 8-12-93
DRILLING METHOD: HSA

ELEV.	DESCRIPTION	STRATA DEPTH	DEPTH SCALE	SAMPLES BLOWS FT.	NO.	TYPE	RECOV.	Qu (tsf)	ω (%)	NOTES
655.9	~~Brn. clayey silt, w/tr.~~	0.0	30							
654.9	f. sand, root hairs topsoil moist	1.0								
653.5	Brn. clayey silt, w/ tr. f. sand moist	2.4		4-6-5	1	ss	17"	1.32	19	
	Lt. gr. lt. brn. mottled clayey silt, w/ tr. f. sand, occas. organic fibers		5	1-4-5	2	ss	18	1.20	28	
650.1	moist	5.8								WATER 8-12-93
	Lt. brn.lt. gr. silt, w /f. sand									DD 12.0' 8:10am BAR 26.3' 9:00am AAR 5.7' 9:30am
				3-3-4	3	ss	18	0.33	28	
			~~10~~	3-3-3	4	ss	18	0.58	28	
644.0	moist	11.9								
	Lt. gr.lt. brn. silt, w/f. sand, occas. blk. organic fibers			2-3-2	5	ss	18	0.91	31	
			~~15~~	2-2-2	6	ss	18	0.58	29	
639.1	moist	16.8								
	Brn. clayey silt, w/tr. f.s and, occas. f. gravel silt lenses			2-4-4	7	ss	18	0.87	25	
			20	2-2-5	8	ss	18	0.82	26	

FILE NAME = miscellaneous_sheets.dgn	USER NAME = jachumsjg	DESIGNED –	REVISED –	STATE OF ILLINOIS DEPARTMENT OF TRANSPORTATION	SOIL BORINGS	F.A.P RTE. 317	SECTION 16W-2,RS-4;17W-1,RS-3	COUNTY FULTON	TOTAL SHEETS 240	SHEET NO. 115
		DRAWN –	REVISED –					CONTRACT NO. 88703		
	PLOT SCALE = 100.0000 ' / IN.	CHECKED –	REVISED –		SCALE: SHEET NO. OF SHEETS STA. TO STA.	FED. ROAD DIST. NO.	ILLINOIS	FED. AID PROJECT		
	PLOT DATE = 2/22/2010	DATE –	REVISED –							

CENTRAL ILLINOIS DRILLING COMPANY
1909 OAKWOOD AVE.
BLOOMINGTON, ILLINOIS 61704
(309) 662-5968

LOG OF BORING

CONTRACTED WITH Hanson Engineers BORING NO. 772-B-1
PROJECT NAME US 24 CONTRACT NO.
LOCATION Sta 772+97 (Culvert) Sta. 773+17 - 33' Rt. (Boring)
DATUM HAMMER WT. 140# HAMMER DROP 30" HOLE DIA. 8"
SURFACE ELEV. 655.9' CORE DIA. CASING HSA
DATE STARTED 8-12-93 COMPLETED 8-12-93 DRILLING METHOD

ELEV.	DESCRIPTION	STRATA DEPTH	DEPTH SCALE	SAMPLES BLOWS FT.	NO.	TYPE	RECOV.	Q_u (tsf)	ω (%)	NOTES
			30							
633.2	till moist	22.7		3-8-9	9	ss	18"	1.65	21	
631.5	Lt. gr. lt. brn. silty clay, w/tr. f. sand, occas. f. gravel till moist	24.4	25	2-3-3	10	ss	18	0.95	28	
	Lt. brn. lt. gr. silt, w/clay, f. sand, occas. f. gravel, sandy silt, clay silt seam			3-3-4	11	ss	18	1.24	34	WATER 8-12-93 DD 12.0' 8:10am AR 26.3' 9:00am AAR 5.7' 9:30am
626.5	Brn. silty clay, w/tr. f. sand, occas. f. gravel	29.4	30	10-13-16	12	ss	18	2.68	17	
623.5	till moist	32.4		2-12-20	13	ss	18	2.89	12	
	Gr. silty clay, w/tr. f. sand, occas. f. gravel									
621.1	till moist	34.8	35	5-11-13	14	ss	18	1.65	15	
619.9	Lt. gr. dk. gr. sandy silt, tr. sandstone, tr. shale, layered	36.0								
	END OF BORING 36.0'		40							

CENTRAL ILLINOIS DRILLING COMPANY
1909 OAKWOOD AVE.
BLOOMINGTON, ILLINOIS 61704
(309) 662-5968

LOG OF BORING

CONTRACTED WITH Hanson Engineers BORING NO. 772-B-2
PROJECT NAME US 24 CONTRACT NO.
LOCATION Sta 772+97 (Culvert) Sta. 772+94 - 46' Lt. (Boring)
DATUM HAMMER WT. 140# HAMMER DROP 30" HOLE DIA. 8"
SURFACE ELEV. 653.2' CORE DIA. CASING
DATE STARTED 8-12-93 COMPLETED 8-12-93 DRILLING METHOD HSA

ELEV.	DESCRIPTION	STRATA DEPTH	DEPTH SCALE	SAMPLES BLOWS FT.	NO.	TYPE	RECOV.	Q_u (tsf)	ω (%)	NOTES
653.2	~~Brn. clayey silt, w/tr.~~	0.0	30							
652.0	f. sand, root hairs topsoil moist	1.2								
651.0	Brn. clayey silt, w/ tr. f. sand moist	2.2		3-4-4	1	ss	17"	1.40	27	
648.8	Lt. brn. lt. gr. mottled clayey silt, w/f. sand, occas. organic fibers moist	4.4								WATER 8-12-93
646.3	Lt. gr. lt. brn. silt, w/f. sand moist	6.9	5	1-2-2	2	ss	18	0.41	27	DD 12.0' 10:50am BAR 21.2' 11:30am AAR 5.9' 12:05pm
	Lt. brn. lt. gr. silt, w/f. sand, occas. organic fibers, roots			2-1-2	3	ss	18	0.49	29	
641.3	moist	11.9	10	2-4-4	4	ss	18	0.91	27	
	Lt. gr. lt. brn. silt, w/tr. f. sand, clay			3-3-3	5	ss	18	0.62	28	
638.5	moist	14.7	15	2-3-4	6	ss	18	0.66	29	
	Brn. clayey silt, w/tr. f. sand, occas. silt lenses, f. gravel			2-3-4	7	ss	18	0.91	26	
633.9	till moist	19.3	20	2-3-6	8	ss	18	1.15	28	
	Lt. brn. lt. gr. clayey silt, w/tr. f. sand, silt									

FILE NAME = miscellaneous_sheets.dgn	USER NAME = jochumsjg	DESIGNED -	REVISED -	STATE OF ILLINOIS DEPARTMENT OF TRANSPORTATION	SOIL BORINGS	F.A.P RTE. 317	SECTION 16W-2,RS-4;17W-1,RS-3	COUNTY FULTON	TOTAL SHEETS 240	SHEET NO. 116
		DRAWN -	REVISED -					CONTRACT NO. 88703		
	PLOT SCALE = 100.0000 ' / IN.	CHECKED -	REVISED -		SCALE: SHEET NO. OF SHEETS STA. TO STA.	FED. ROAD DIST. NO.	ILLINOIS	FED. AID PROJECT		
	PLOT DATE = 2/22/2010	DATE -	REVISED -							

CENTRAL ILLINOIS DRILLING COMPANY
1909 OAKWOOD AVE.
BLOOMINGTON, ILLINOIS 61704
(309) 662-5968

LOG OF BORING

CONTRACTED WITH Hanson Engineers BORING NO. 772-B-2
PROJECT NAME US 24 CONTRACT NO.
LOCATION Sta 772+97 (Culvert) Sta. 772 + 94 - 46' Lt. (Boring)
DATUM HAMMER WT. 140# HAMMER DROP 30" HOLE DIA. 8"
SURFACE ELEV. 653.2' CORE DIA. CASING
DATE STARTED 8-12-93 COMPLETED 8-12-93 DRILLING METHOD HSA

ELEV.	DESCRIPTION	STRATA DEPTH	DEPTH SCALE	SAMPLES BLOWS FT.	NO.	TYPE	RECOV.	Q_u (ksf)	w (%)	NOTES
			30							
	occas. f. gravel pockets			2-3-5	9	ss	18"	1.81	24	
628.8	till v. moist	24.4								
	Lt. gr. lt. brn. mottled clayey silt, w/f. sand, occas. f. gravel, silt seams		25	3-4-4	10	ss	18	1.15	25	
626.3		26.9								
	Brn. silty clay, w/tr f. sand, occas. f. gravel, gr. mottling			8-11-13	11	ss	18	2.89	18	
			30	11-21-38	12	ss	18	3.30	13	
622.2	till moist	31.0								
	END OF BORING 31.0'									
			35							

CENTRAL ILLINOIS DRILLING COMPANY
1909 OAKWOOD AVE.
BLOOMINGTON, ILLINOIS 61704
(309) 662-5968

LOG OF BORING

CONTRACTED WITH Hanson Engineers BORING NO. 793-B-1
PROJECT NAME US 24 CONTRACT NO.
LOCATION Sta. 793 + 48 (Culvert) Sta. 793 + 33 - 45' Rt. (Boring)
DATUM HAMMER WT. 140# HAMMER DROP 30" HOLE DIA. 8"
SURFACE ELEV. 643.7' CORE DIA. CASING
DATE STARTED 7-16-93 COMPLETED 7-16-93 DRILLING METHOD HSA

ELEV.	DESCRIPTION	STRATA DEPTH	DEPTH SCALE	SAMPLES BLOWS FT.	NO.	TYPE	RECOV.	Q_u (ksf)	w (%)	NOTES
643.7		0.0	30							#A Dk. brn. clayey silt, w/tr f. sand, root hairs moist
643.2	See #A	0.5								
	Lt. brn. clayey silt, w/tr. f. sand, occas. silt seams			4-3-5	1	ss	18"	.82	27	
			5	3-3-3	2	ss	10	.45	28	WATER 7-16-93
				2-4-7	3	ss	18	.91	25	DD 9.5' 9:50pm BAR 37.2' 11:50a AAR 30.8' 11:55a DWL 9.8' 11:55am 7-17-93
633.9	moist	9.8								
	Lt. brn. lt. gr. clayey silt, w/tr. f. sand, occas. f. gravel		10	4-4-6	4	ss	18	.95	26	
				2-3-5	5	ss	18	.91	23	
628.8	till moist	14.9								
	Lt. gr. lt. brn. clayey silt, w/tr. f. sand, occas. f. gravel		15	4-5-8	6	ss	18	2.27	21	
626.3	till moist	17.4		3-3-4	7	ss	18	.61	22	
625.3	Gr. sandy clay, w/ silt, occas. f. gravel	18.4								
	Gr. clayey silt, w/ tr. f. sand, occas. f. gravel		20	5-7-9	8	ss	18	1.57	15	

FILE NAME = miscellaneous_sheets.dgn	USER NAME = jochumsjg	DESIGNED -	REVISED -	STATE OF ILLINOIS DEPARTMENT OF TRANSPORTATION	SOIL BORINGS	F.A.P RTE. 317	SECTION 16W-2,RS-4;17W-1,RS-3	COUNTY FULTON	TOTAL SHEETS 240 / SHEET NO. 117
		DRAWN -	REVISED -					CONTRACT NO. 88703	
	PLOT SCALE = 100.0000 ' / IN.	CHECKED -	REVISED -		SCALE: SHEET NO. OF SHEETS STA. TO STA.	FED. ROAD DIST. NO.	ILLINOIS	FED. AID PROJECT	
	PLOT DATE = 2/22/2010	DATE -	REVISED -						

CENTRAL ILLINOIS DRILLING COMPANY
1909 OAKWOOD AVE.
BLOOMINGTON, ILLINOIS 61704
(309) 662-5968

LOG OF BORING

CONTRACTED WITH Hanson Engineers BORING NO. 793-B-1
PROJECT NAME US 24 CONTRACT NO.
LOCATION Sta. 793 + 48 (Culvert) Sta. 793 + 33 - 45' Rt. (Boring)
DATUM HAMMER WT. 140# HAMMER DROP 30" HOLE DIA. 8"
SURFACE ELEV. 643.7' CORE DIA. CASING
DATE STARTED 7-16-93 COMPLETED 7-16-93 DRILLING METHOD HSA

ELEV.	DESCRIPTION	STRATA DEPTH	DEPTH SCALE	BLOWS FT.	SAMPLES NO.	TYPE	RECOV.	Q_u (tsf)	w (%)	NOTES
			30							
620.4	till moist	23.3		8-11-18	9	ss	18"	2.27	15	
	Gr. silty clay, w/ tr. f. sand, occas. f. gravel, sandstone, sand lenses		25	7-11-13	10	ss	18	3.09	11	
				13-23-33	11	ss	18	--	14	
			30	11-19-20	12	ss	18	--	12	
				11-13-20	13	ss	18	--	12	
			35	10-17-22	14	ss	18	--	12	
				12-14-26	15	ss	18	2.89	12	
			40	13-22-26	16	ss	18	3.71	12	
602.5	till moist	41.2								
	END OF BORING 41.2'									

CENTRAL ILLINOIS DRILLING COMPANY
1909 OAKWOOD AVE.
BLOOMINGTON, ILLINOIS 61704
(309) 662-5968

LOG OF BORING

CONTRACTED WITH Hanson Engineers BORING NO. 793-B-2
PROJECT NAME US 24 CONTRACT NO.
LOCATION Sta. 793 + 48 (Culvert) Sta. 793 + 28 - 60' Lt. (Boring)
DATUM HAMMER WT. 140# HAMMER DROP 30" HOLE DIA. 8"
SURFACE ELEV. 634.0' CORE DIA. CASING
DATE STARTED 7-19-93 COMPLETED 7-19-93 DRILLING METHOD HSA

ELEV.	DESCRIPTION	STRATA DEPTH	DEPTH SCALE	BLOWS FT.	SAMPLES NO.	TYPE	RECOV.	Q_u (tsf)	w (%)	NOTES
634.0		0.0	30							
	Dk. brn.-brn. silt, w/tr. f. sand, organic fibers			2-2-2	1	ss	18"	.49	30	
630.8	wet	3.2								
	Lt. brn. gr. clayey silt, w/tr. f. sand		5	3-3-3	2	ss	18	.49	31	WATER 7-19-93 DD 0.0' 11:00am BAR 23.4' 12:45pm AAR 17.7' 1:05pm
627.1	moist	6.9								
	Lt. gr. brn. clayey silt, w/tr. f. sand, occas. f. gravel			3-4-6	3	ss	18	2.06	19	DWL Surface 1:05 7-20-93
624.7	moist	9.3								
	Gr. clayey silt, w/ tr. f. sand, occas. f. gravel		10	5-6-8	4	ss	18	1.73	16	
622.1	till moist	11.9								
	Gr. sandy clay, w/ silt, occas. f. gravel, f. sand lenses			9-18-18	5	ss	18	2.06	12	
619.6	moist	14.4								
	Gr. clayey silt, w/f. sand, occas. f. gravel, f. sand lenses		15	6-8-11	6	ss	18	1.65	17	
615.2	till moist	18.8		16-15-23	7	ss	18	3.92	12	
			20	9-16-20	8	ss	18	4.71	12	

CENTRAL ILLINOIS DRILLING COMPANY
1909 OAKWOOD AVE.
BLOOMINGTON, ILLINOIS 61704
(309) 662-5968

LOG OF BORING

CONTRACTED WITH Hanson Engineers BORING NO. 793-B-2
PROJECT NAME US 24 CONTRACT NO.
LOCATION Sta. 793 + 48 (Culvert) Sta. 793 + 28 - 60' Lt. (Boring)
DATUM HAMMER WT. 140# HAMMER DROP 30" HOLE DIA. 8"
SURFACE ELEV. 634.0' CORE DIA. CASING
DATE STARTED 7-19-93 COMPLETED 7-19-93 DRILLING METHOD HSA

ELEV.	DESCRIPTION	STRATA DEPTH	DEPTH SCALE	BLOWS FT.	SAMPLES NO.	TYPE	RECOV.	Qu (tsf)	ω (%)	NOTES
			30							
	Gr. silty clay, w/f. sand, occas. f.m. gravel, f. sand lenses			12-15-18	9	ss	18"	4.72	13	
			25	9-10-16	10	ss	18	3.92	12	
608.0	till moist	26.0								
	END OF BORING 26.0'									
			30							

CENTRAL ILLINOIS DRILLING COMPANY
1909 OAKWOOD AVE.
BLOOMINGTON, ILLINOIS 61704
(309) 662-5968

LOG OF BORING

CONTRACTED WITH Hanson Engineers BORING NO. 828-B-1
PROJECT NAME US 24 CONTRACT NO.
LOCATION Sta. 828+50 (Culvert) Sta. 828+26 - 52' Rt. (Boring)
DATUM HAMMER WT. 140# HAMMER DROP 30" HOLE DIA. 8"
SURFACE ELEV. 653.3' CORE DIA. CASING
DATE STARTED 7-20-93 COMPLETED 7-20-93 DRILLING METHOD HSA

ELEV.	DESCRIPTION	STRATA DEPTH	DEPTH SCALE	BLOWS FT.	SAMPLES NO.	TYPE	RECOV.	Qu (tsf)	ω (%)	NOTES
653.3		0.0	30							
652.5	See #A	0.8								#A Dk. brn. silt w/clay, tr. f. sand, root hairs
	Lt. brn. silt, w/tr. f. sand, organic fibers			2-2-2	1	ss	17"	.41	32	
649.0	moist	4.3								
	Lt. brn. blk. dk. gr. silt, w/clay, tr. f. sand		5	2-2-2	2	ss	14	.33	31	WATER 7-20-93
										DD 1.0' 1:10pm BAR 33.1' 2:40pm AAR 2.2' 3:25pm
				3-2-3	3	ss	17	.87	30	DWL 0.0' 3:25pm 7-21-93
643.9	moist	9.4								
	Lt. brn. lt. gr. clayey silt, w/tr. f. sand, occas. f. gravel		10	3-2-3	4	ss	18	1.24	23	F. sand 19.0'-19.
				2-3-4	5	ss	18	.99	23	
			15	4-5-6	6	ss	18	1.4	23	
636.5	till moist	16.8								
	Lt. gr. silt, w/clay, f. sand, occas. f. gravel			0-2-2	7	ss	18	.29	20	
634.9	moist	18.4								
	Gr. clayey silt, w/f. sand, occas. f. gravel,		20	4-5-7	8	ss	18	1.57	18	

FILE NAME = miscellaneous_sheets.dgn	USER NAME = jschumsjg	DESIGNED -	REVISED -	STATE OF ILLINOIS DEPARTMENT OF TRANSPORTATION	SOIL BORINGS	F.A.P RTE.	SECTION	COUNTY	TOTAL SHEETS	SHEET NO.
		DRAWN -	REVISED -			317	16W-2,RS-4;17W-1,RS-3	FULTON	240	119
	PLOT SCALE = 100.0000 ' / IN.	CHECKED -	REVISED -					CONTRACT NO. 88703		
	PLOT DATE = 2/22/2010	DATE -	REVISED -		SCALE: SHEET NO. OF SHEETS STA. TO STA.	FED. ROAD DIST. NO.	ILLINOIS	FED. AID PROJECT		

CENTRAL ILLINOIS DRILLING COMPANY
1909 OAKWOOD AVE.
BLOOMINGTON, ILLINOIS 61704
(309) 662-5968

LOG OF BORING

CONTRACTED WITH Hanson Engineers BORING NO. 828-B-1
PROJECT NAME US 24 CONTRACT NO.
LOCATION Sta. 828 + 50 (Culvert) Sta. 828+26 - 52' Rt. (Boring)
DATUM HAMMER WT. 140# HAMMER DROP 30" HOLE DIA. 8"
SURFACE ELEV. 653.3' CORE DIA. CASING
DATE STARTED 7-20-93 COMPLETED 7-20-93 DRILLING METHOD HSA

ELEV.	DESCRIPTION	STRATA DEPTH	DEPTH SCALE	SAMPLES BLOWS FT.	NO.	TYPE	RECOV.	Q_u (tsf)	ω (%)	NOTES
			30							
	sand lenses, seams			4-5-9	9	ss	18"	1.48	14	
			25	6-10-13	10	ss	18	2.89	14	
				10-8-10	11	ss	18	1.73	14	
			30	7-8-13	12	ss	18	2.47	12	
621.5	till moist	31.8								
	Gr. silty clay, w/ tr. f. sand, occas. f. gravel			10-13-27	13	ss	18	4.53	11	
619.0	till moist	34.3								
617.6	Lt. gr. sandstone w/weathered shale	35.7	35	30-43-57/2"	14	ss	14	--	13	
	END OF BORING 35.7'									
			40							

CENTRAL ILLINOIS DRILLING COMPANY
1909 OAKWOOD AVE.
BLOOMINGTON, ILLINOIS 61704
(309) 662-5968

LOG OF BORING

CONTRACTED WITH Hanson Engineers BORING NO. 828-B-2
PROJECT NAME US 24 CONTRACT NO.
LOCATION Sta. 828 + 50 (Culvert) Sta. 828 + 61 - 57' Lt. (Boring)
DATUM HAMMER WT. 140# HAMMER DROP 30" HOLE DIA. 8"
SURFACE ELEV. 653.6' CORE DIA. CASING
DATE STARTED 7-20-93 COMPLETED 7-20-93 DRILLING METHOD HSA

ELEV.	DESCRIPTION	STRATA DEPTH	DEPTH SCALE	SAMPLES BLOWS FT.	NO.	TYPE	RECOV.	Q_u (tsf)	ω (%)	NOTES
653.6		0.0	30							
651.9	Dk. brn. clayey silt, w/tr. f. sand, root hairs moist	1.7								
650.8	Brn. clayey silt, w/ f. sand moist	2.8		2-1-2	1	ss	17"	.33	32	
647.9	Lt. brn. lt. gr. silt, w/tr. f. sand, occas. mottling, wood moist	5.7	5	2-1-2	2	ss	18	.29	28	WATER 7-20-93
	Lt. brn. lt. gr. clayey silt, w/tr. f. sand			2-2-3	3	ss	18	.49	35	DD 6.8' 8:45am BAR 21.9' 9:40am AAR 4.0' 10:55am DWL 2.1' 10:55am 7-21-93
643.2	moist	10.4	10	3-3-3	4	ss	18	1.03	23	
	Gr. clayey silt, w/tr. f. sand, occas. f. gravel			4-4-5	5	ss	18	1.48	21	
639.3	till moist	14.3								
	Lt. brn. gr. silty clay, w/tr. f. sand, occas. f. gravel		15	4-6-6	6	ss	18	2.06	24	
636.0	till moist	17.6		2-1-2	7	ss	18	--	20	
	Gr. silty sand									
634.2	wet	19.4	20	2-3-6	8	ss	18	1.24	18	

FILE NAME = miscellaneous_sheets.dgn	USER NAME = joshuma.jg	DESIGNED -	REVISED -
		DRAWN -	REVISED -
	PLOT SCALE = 100.0000 ' / IN.	CHECKED -	REVISED -
	PLOT DATE = 2/22/2010	DATE -	REVISED -

STATE OF ILLINOIS
DEPARTMENT OF TRANSPORTATION

SOIL BORINGS

SCALE: SHEET NO. OF SHEETS STA. TO STA.

F.A.P RTE.	SECTION	COUNTY	TOTAL SHEETS	SHEET NO.
317	16W-2,RS-4;17W-1,RS-3	FULTON	240	120
		CONTRACT NO. 88703		
FED. ROAD DIST. NO.	ILLINOIS	FED. AID PROJECT		

LOG OF BORING

CENTRAL ILLINOIS DRILLING COMPANY
1909 OAKWOOD AVE.
BLOOMINGTON, ILLINOIS 61704
(309) 662-5968

CONTRACTED WITH Hanson Engineers BORING NO. 828-B-2
PROJECT NAME US 24 CONTRACT NO.
LOCATION Sta. 828 + 50 (Culvert) Sta. 828+61-52' Lt. (Boring)
DATUM HAMMER WT. 140# HAMMER DROP 30" HOLE DIA. 8"
SURFACE ELEV. 653.6' CORE DIA. CASING
DATE STARTED 7-20-93 COMPLETED 7-20-93 DRILLING METHOD HSA

ELEV.	DESCRIPTION	STRATA DEPTH	DEPTH SCALE	SAMPLES BLOWS FT.	NO.	TYPE	RECOV.	Q_u (tsf)	ω (%)	NOTES
			30							
	Gr. clayey silt, w/ tr. f. sand, occas. f. gravel			4-4-11	9	ss	18"	1.32	16	
629.5	till moist	24.1								
	Gr. silty clay, w/ f. sand, occas. f. gravel, sand seam		25	5-11-14	10	ss	18	3.09	15	
625.6	till moist	28.0		7-8-9	11	ss	18	1.65	16	
	Gr. silt w/f. sand lenses									
623.7	moist	29.9								
	Gr. clayey silt, w/f. sand, occas. f. gravel, sand seams		30	10-8-13	12	ss	18	1.73	17	
620.7	till moist	32.9		10-20-28	13	ss	18	4.12	12	
	Gr. silty clay, w/tr. f.s and, occas. f. gravel									
617.9	till moist	35.7	35	9-14-20	14	ss	18	3.71	17	
617.6	Gr. silty clay, w/tr. weathered shale	36.0								
	END OF BORING 36.0'									
			40							

FILE NAME = miscellaneous_sheets.dgn	USER NAME = jochuma,jg	DESIGNED -	REVISED -	STATE OF ILLINOIS DEPARTMENT OF TRANSPORTATION	SOIL BORINGS	F.A.P RTE.	SECTION	COUNTY	TOTAL SHEETS	SHEET NO.
		DRAWN -	REVISED -			317	16W-2,RS-4;17W-1,RS-3	FULTON	240	121
	PLOT SCALE = 100.0000 ' / IN.	CHECKED -	REVISED -					CONTRACT NO. 88703		
	PLOT DATE = 2/22/2010	DATE -	REVISED -		SCALE: SHEET NO. OF SHEETS STA. TO STA.	FED. ROAD DIST. NO.	ILLINOIS	FED. AID PROJECT		

TOPSOIL SURVEY

FAP 317 (US 24) From Summum to Astoria

88703 D94-060-95

Sta	Offset*	Depth(in) **	Remarks/Extent
676+00	35 Lt	12	
681+00	35 Rt	9	
685+00	30 Lt	9	
685+00	30 Rt	9	
690+00	31 Rt	9	
690+00	31 Lt	6	
695+00	30 Rt	8	
695+00	32 Lt	8	
719+00	40 Rt	0	
723+00	30 Rt	8	
734+00	35 Rt	4	
740+00	32 Lt	9	
746+50	25 Lt	8	
746+50	30 Rt	6	
755+00	30 Lt	8	
755+00	34 Rt	10	
760+00	30 Lt	18+	Very dark & Clayey
760+00	31 Rt	16	Very dark & Clayey
765+00	31 Lt	16	
765+00	31 Rt	20+	
774+00	37 Lt	6	
774+00	32 Rt	8	
779+00	34 Lt	6	
779+00	31 Rt	6	
785+00	33 Lt	8	
785+00	27 Rt	5	
789+00	35 Lt	5	Brown Clay
792+50	34 Rt	0	
795+00	32 Lt	9	
798+00	60 Lt	5	
806+00	34 Lt	12	
806+00	27 Rt	6	
810+50	30 Lt	4	w/ trace of gravels
810+50	28 Rt	4	w/ trace of gravels
823+00	35 Lt	10	
823+00	32 Rt	12	Dk. Brown SiCL
832+00	35 Lt	8	
832+00	29 Rt	6	
840+00	30 Lt	8	
840+00	30 Rt	6	
845+00	34 Lt	8	
845+00	26 Rt	8	
850+00	32 Lt	9	
850+00	28 Rt	8	
855+00	32 Lt	10	
855+00	28 Rt	7	

* offset measured from centerline

** Depth represents useable topsoil after clearing 2"± of vegetation

FOR INFORMATION ONLY

FILE NAME = miscellaneous_sheets.dgn	USER NAME = jochumsjg	DESIGNED - KJH	REVISED -	STATE OF ILLINOIS DEPARTMENT OF TRANSPORTATION	TOPSOIL SURVEY (FOR INFO ONLY)	F.A.P RTE.	SECTION	COUNTY	TOTAL SHEETS	SHEET NO.
		DRAWN - JGJ	REVISED -			317	16W-2,RS-4;17W-1,RS-3	FULTON	240	122
	PLOT SCALE = 100.0000 ' / IN.	CHECKED - KJH	REVISED -					CONTRACT NO. 88703		
	PLOT DATE = 3/23/2010	DATE -	REVISED -		SCALE: SHEET NO. 1 OF 1 SHEETS STA. TO STA.	FED. ROAD DIST. NO.	ILLINOIS	FED. AID PROJECT		

674+01 UPSTREAM & DOWNSTREAM

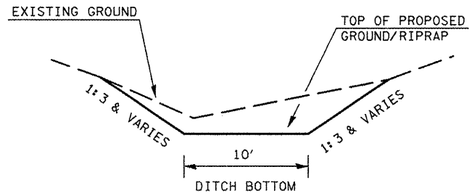

682+90.81 DOWNSTREAM

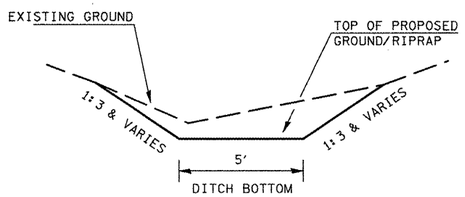

705+03 UPSTREAM & DOWNSTREAM

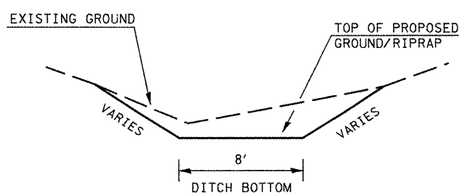

715+46.82 UPSTREAM

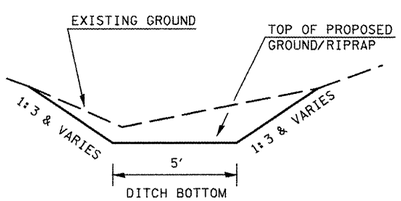

714+81.46 DOWNSTREAM

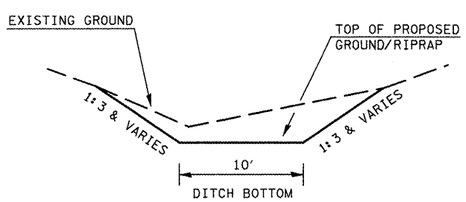

733+64.5 DOWNSTREAM

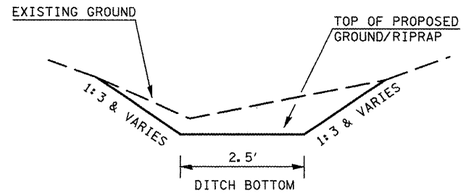

743+43.30 UPSTREAM & DOWNSTREAM

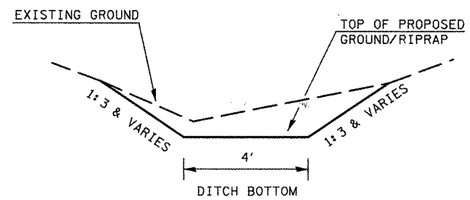

752+63 DOWNSTREAM WATERWAY SECTION

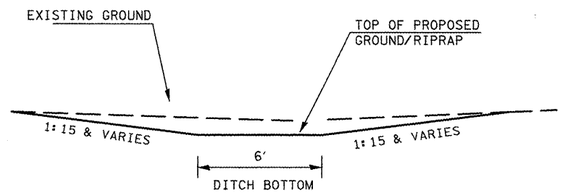

772+96.50 DOWNSTREAM WATERWAY SECTION

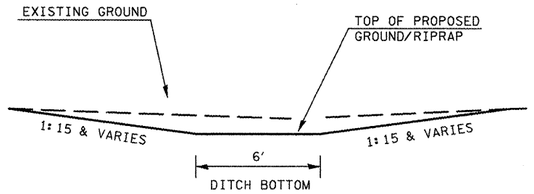

793+46 UPSTREAM & DOWNSTREAM

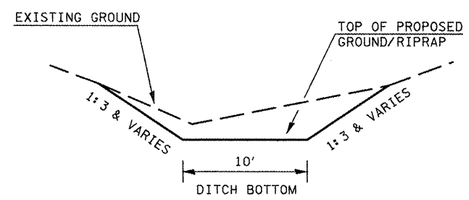

828+50 UPSTREAM & DOWNSTREAM WATERWAY SECTIONS

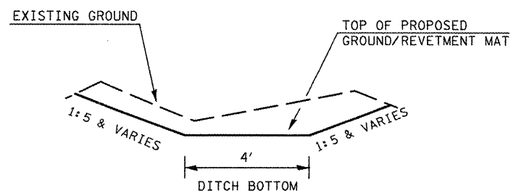

864+33 DOWNSTREAM

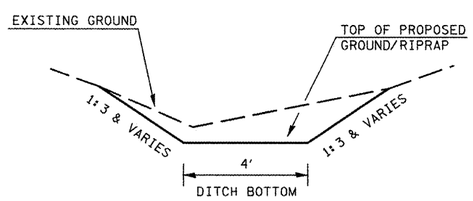

FILE NAME = miscellaneous_sheets.dgn	USER NAME = jochumsjg	DESIGNED - KJH	REVISED -	STATE OF ILLINOIS DEPARTMENT OF TRANSPORTATION	WATERWAY TYPICAL SECTIONS	F.A.P RTE.	SECTION	COUNTY	TOTAL SHEETS / SHEET NO.
		DRAWN - JGJ	REVISED -			317	16W-2,RS-4;17W-1,RS-3	FULTON	240 / 123
	PLOT SCALE = 100.0000 ' / IN.	CHECKED - KJH	REVISED -					CONTRACT NO. 88703	
	PLOT DATE = 2/25/2010	DATE -	REVISED -		SCALE: SHEET NO. 1 OF 1 SHEETS STA. TO STA.	FED. ROAD DIST. NO.	ILLINOIS	FED. AID PROJECT	

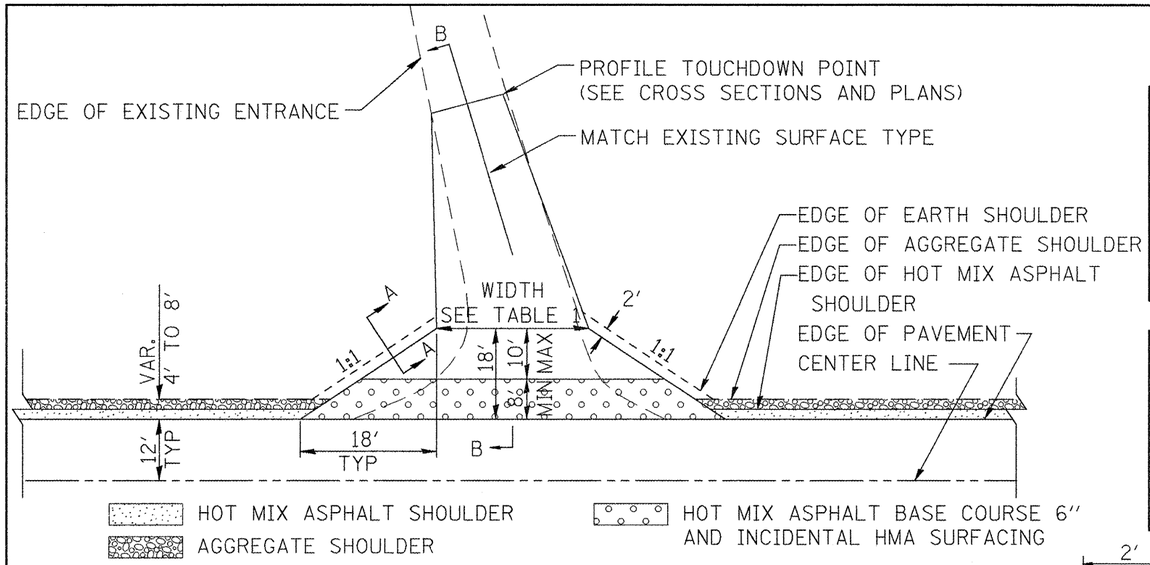

PLAN

COMMERCIAL / FARM-RELATED ENTRANCE

TABLE 1								
RURAL ENTRANCE DESIGN								
ELEMENT	NON-COMMERCIAL		NON-COMMERCIAL W/ LARGE FARM EQUIPMENT		COMMERCIAL			
					1-WAY OPERATION		2-WAY OPERATION	
WIDTH (W)	12'(3.6m) Min.	24'(7.2m) Max.	20' (6.1m)Max.	30' (9.0m)Max.	14'(4.3m) Min.	24'(7.2m) Max.	24'(7.2m) Min.	35'(10.7m) Max.
FLARE	1:1							
MAX. GRADE (G)	12%		12%		10%			
SURFACE TYPE								
HMA BASE COURSE 6" AND INCIDENTAL HOT MIX ASPHALT SURFACING	8"		—		8"			
AGGREGATE SURFACE COURSE, TYPE B	6"		8"		8"			
PCC DRIVEWAY PAVEMENT	6"		—		7"			

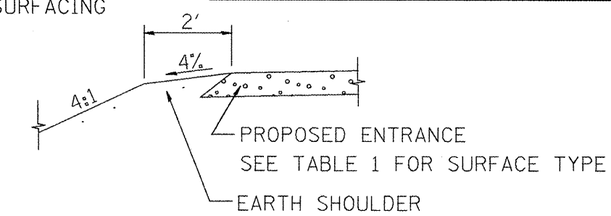

SECTION A-A

SHOULDER TREATMENT FOR RURAL ENTRANCES

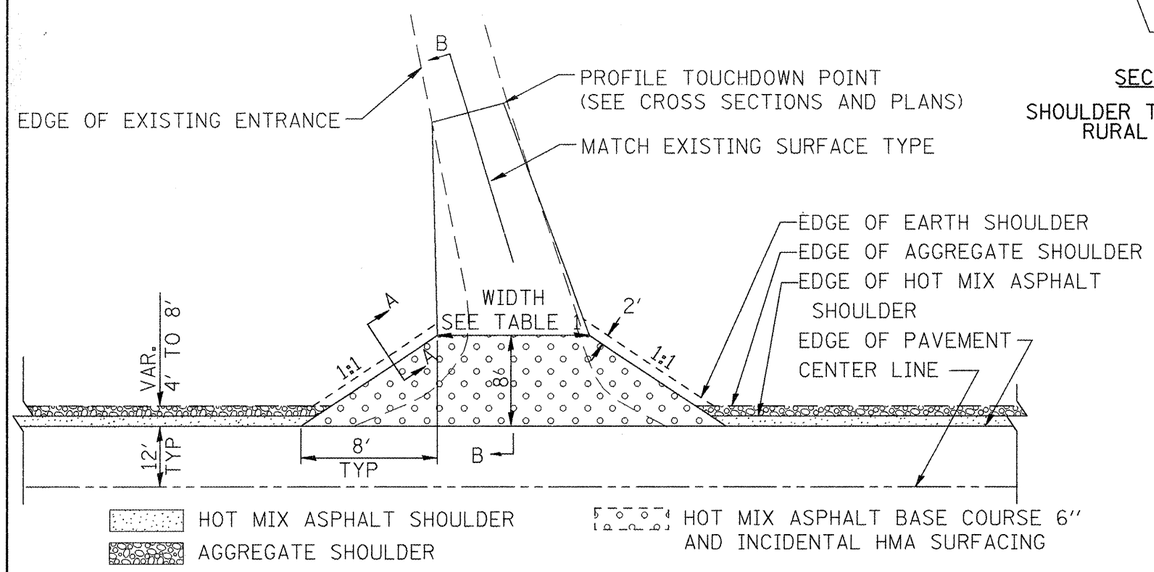

PLAN

PRIVATE ENTRANCE

GENERAL NOTES

1. ENTRANCES SHALL SLOPE AWAY FROM THE PAVEMENT AT A RATE EQUAL TO THE SHOULDER SLOPE FOR A MINIMUM DISTANCE OF 8'.

2. A MINIMUM 8' PAVED SHOULDER SHALL BE CONSTRUCTED BETWEEN LOCATIONS WHERE THE RURAL ENTRANCE IS LESS THAN 50' FROM AN ADJACENT SIDEROAD, ENTRANCE OR MAILBOX TURNOUT.

3. A TAPER RATE OF 5:1 IS DESIRABLE WHEN TRANSITING FROM THE RURAL ENTRANCE WIDTH SHOWN IN TABLE 1, TO THE EXISTING ENTRANCE WIDTH.

All dimensions are in inches (millimeters) unless otherwise noted.

01-01-97	RENUM. C-103.06, NEW REVISION BOX	T.P.	10-16-06	REVISED TO 2007 SPEC.	M.A.
07-01-97	REVISE DESIGNER NOTES	J.A.			
01-17-03	ADJUST DESIGN, CHANGE ENTRANCE	JATR			
09-15-05	RADIUS FOR FLARE	M.M.A.			

STATE OF ILLINOIS
DEPARTMENT OF TRANSPORTATION

RURAL ENTRANCE DETAIL

NOT TO SCALE

SHT. 1 OF 2

F.A.P RTE.	SECTION	COUNTY	TOTAL SHEETS	SHEET NO.
317	16W-2,RS-4;17W-1,RS-3	FULTON	240	124
		CONTRACT NO. 88703		
FED. ROAD DIST. NO.	ILLINOIS	FED. AID PROJECT		

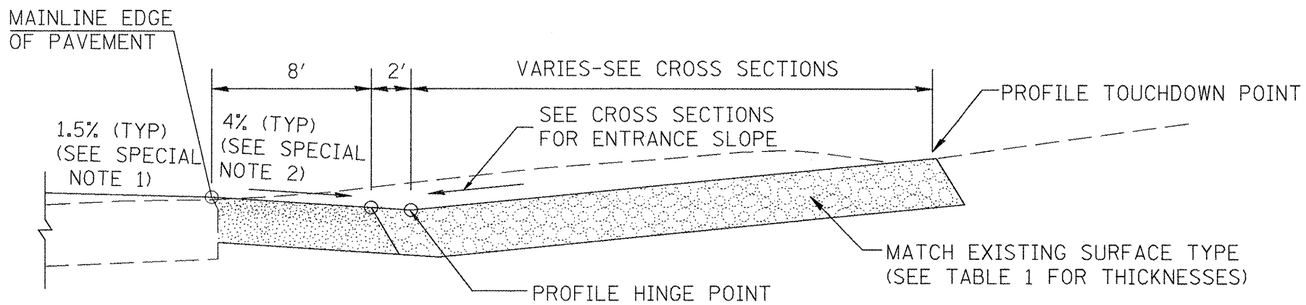

SECTION B-B

RECONSTRUCTED RURAL ENTRANCE
(EXISTING ENTRANCE HIGHER THAN APRON)

SPECIAL NOTES

1. The mainline pavement cross-slope is 1.5% for tangent alignment. See PLANS for cross-slope on superelevated horizontal curves.

2. The shoulder slope shall control the entrance profile for a distance of 10' (3.0m) minimum from the pavement edge. The shoulder cross-slope is 4% for tangent alignment. Through superelevated curves, the maximum pavement-shoulder breakover should not be greater than 10% for shoulders 6' (1.8m) and wider and 12% for shoulders 4' (1.2m) and less. Where 12' paved shoulders are provided, the breakover should be at the edge of the paved shoulder rather than at the pavement edge.

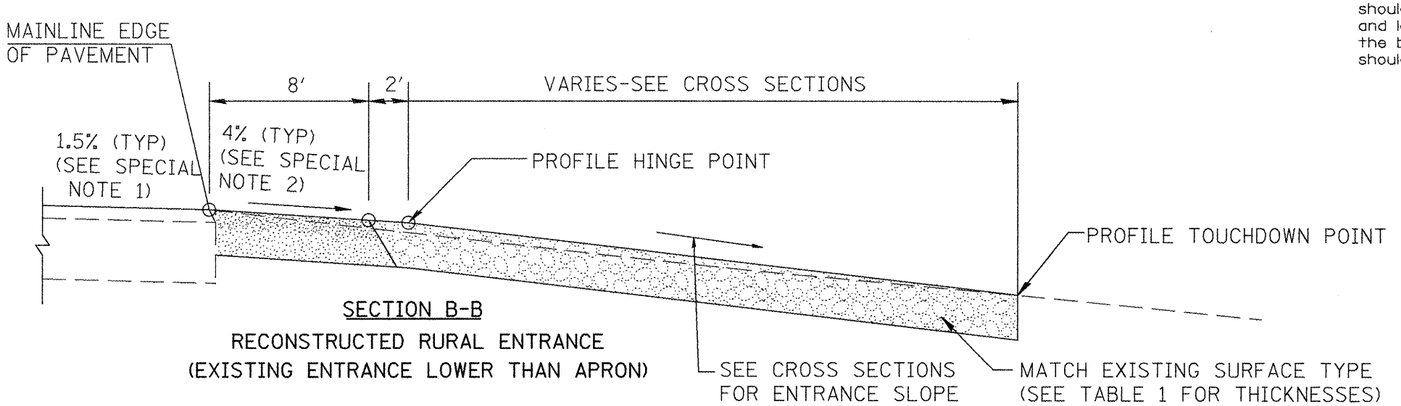

SECTION B-B

RECONSTRUCTED RURAL ENTRANCE
(EXISTING ENTRANCE LOWER THAN APRON)

All dimensions are in inches (millimeters) unless otherwise noted.

STATE OF ILLINOIS DEPARTMENT OF TRANSPORTATION	RURAL ENTRANCE DETAIL NOT TO SCALE	SHT. 2 OF 2	

F.A.P RTE.	SECTION	COUNTY	TOTAL SHEETS	SHEET NO.
317	16W-2,RS-4;17W-1,RS-3	FULTON	240	125
		CONTRACT NO. 88703		
FED. ROAD DIST. NO.	ILLINOIS	FED. AID PROJECT		

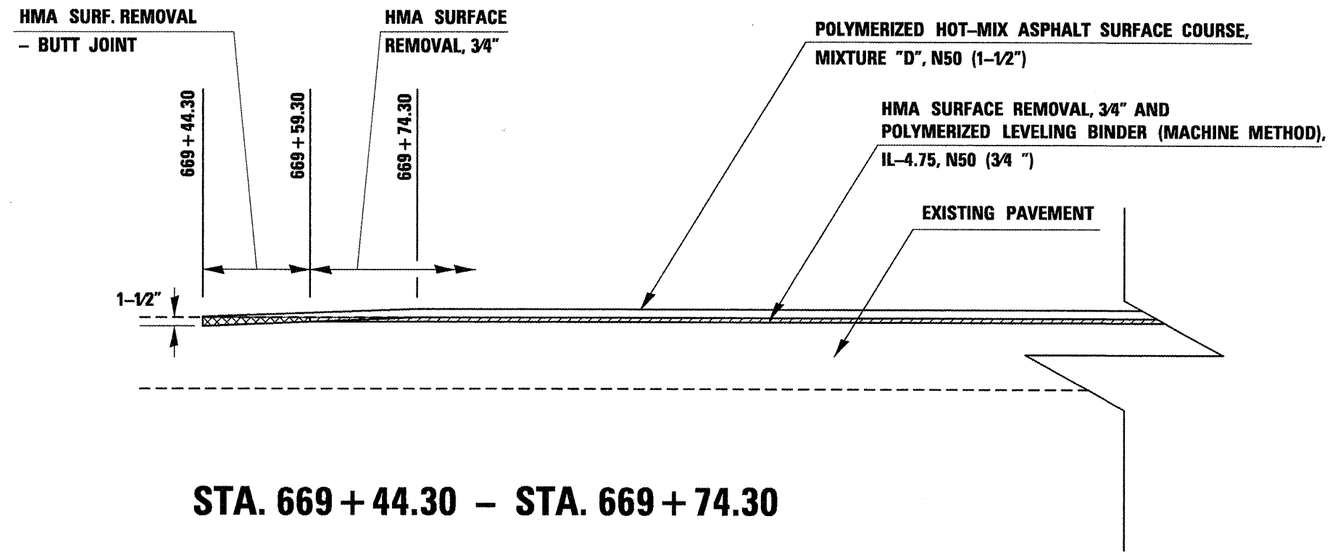

STA. 669 + 44.30 – STA. 669 + 74.30

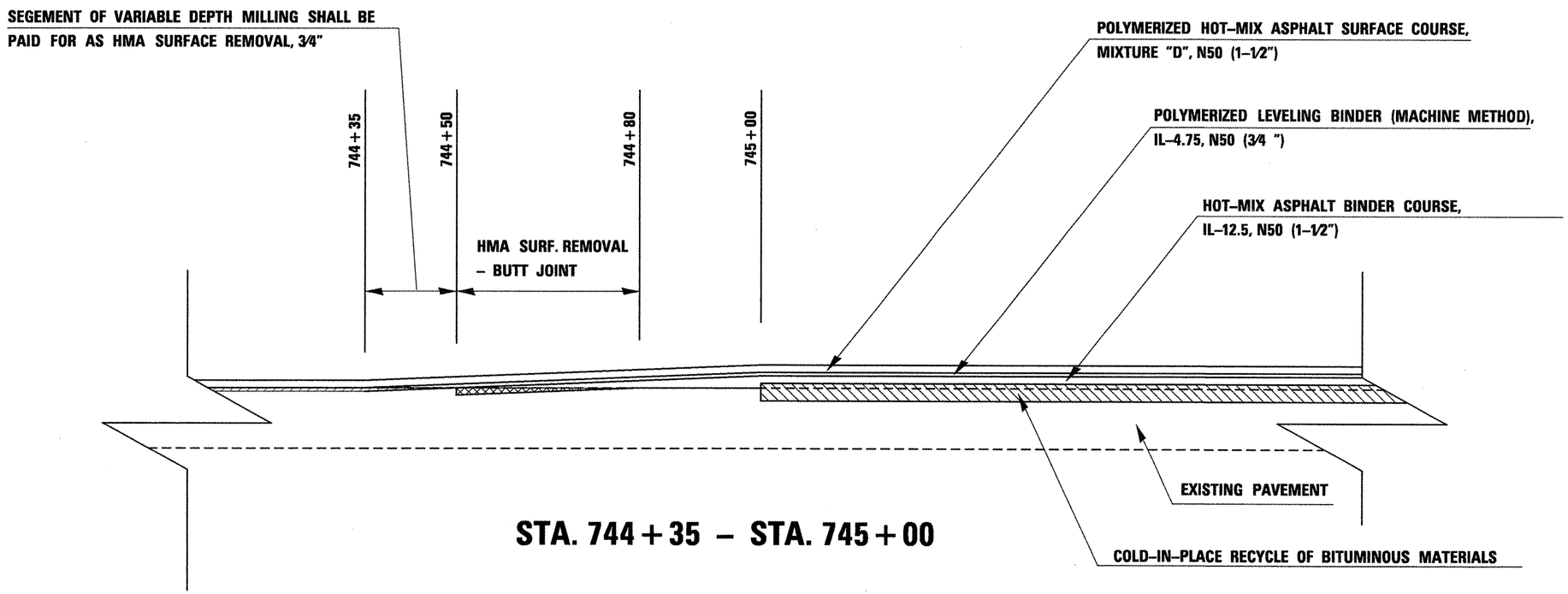

STA. 744 + 35 – STA. 745 + 00

FILE NAME = miscellaneous_sheets.dgn	USER NAME = jochumsjg	DESIGNED - KJH	REVISED -	STATE OF ILLINOIS DEPARTMENT OF TRANSPORTATION	PAVING TRANSITION DETAILS	F.A.P RTE.	SECTION	COUNTY	TOTAL SHEETS	SHEET NO.
		DRAWN - JGJ	REVISED -			317	16W-2,RS-4;17W-1,RS-3	FULTON	240	126
	PLOT SCALE = 100.0000 ' / IN.	CHECKED - KJH	REVISED -					CONTRACT NO. 88703		
	PLOT DATE = 3/10/2010	DATE -	REVISED -		SCALE: SHEET NO. 1 OF 2 SHEETS STA. TO STA.	FED. ROAD DIST. NO.	ILLINOIS	FED. AID PROJECT		

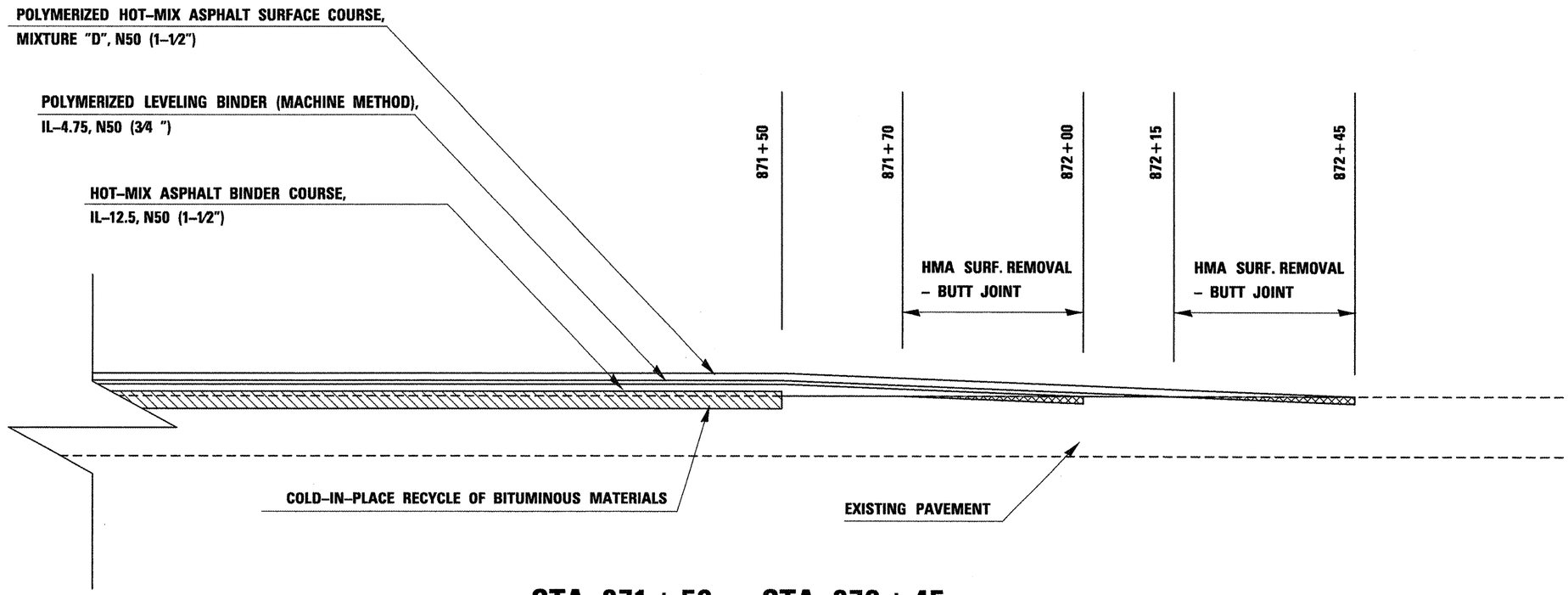

STA. 871+50 – STA. 872+45

FILE NAME = miscellaneous_sheets.dgn	USER NAME = jochumgjg	DESIGNED - KJH	REVISED -	STATE OF ILLINOIS DEPARTMENT OF TRANSPORTATION	PAVING TRANSITION DETAILS	F.A.P RTE.	SECTION	COUNTY	TOTAL SHEETS	SHEET NO.
		DRAWN - JGJ	REVISED -			317	16W-2,RS-4;17W-1,RS-3	FULTON	240	127
	PLOT SCALE = 100.0000 ' / IN.	CHECKED - KJH	REVISED -					CONTRACT NO. 88703		
	PLOT DATE = 3/10/2010	DATE -	REVISED -		SCALE: SHEET NO. 2 OF 2 SHEETS STA. TO STA.	FED. ROAD DIST. NO.	ILLINOIS	FED. AID PROJECT		

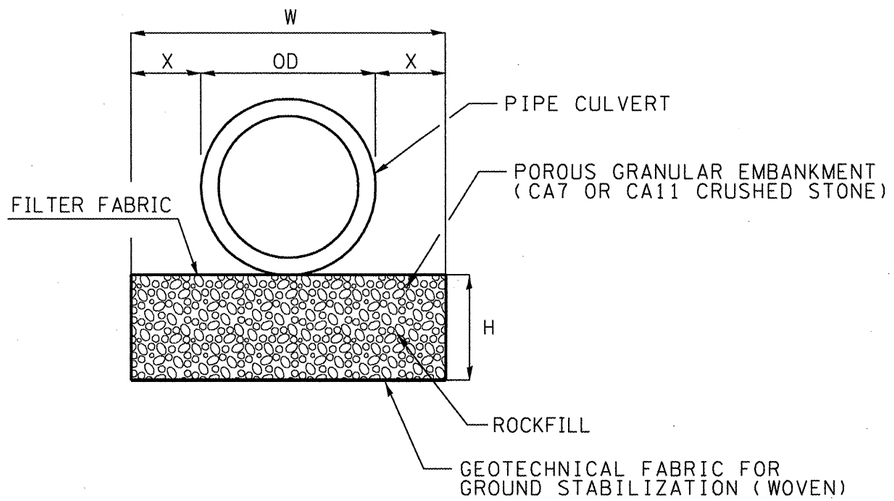

ALTERNATE I: FOR 12" TO 18" UNDERCUT

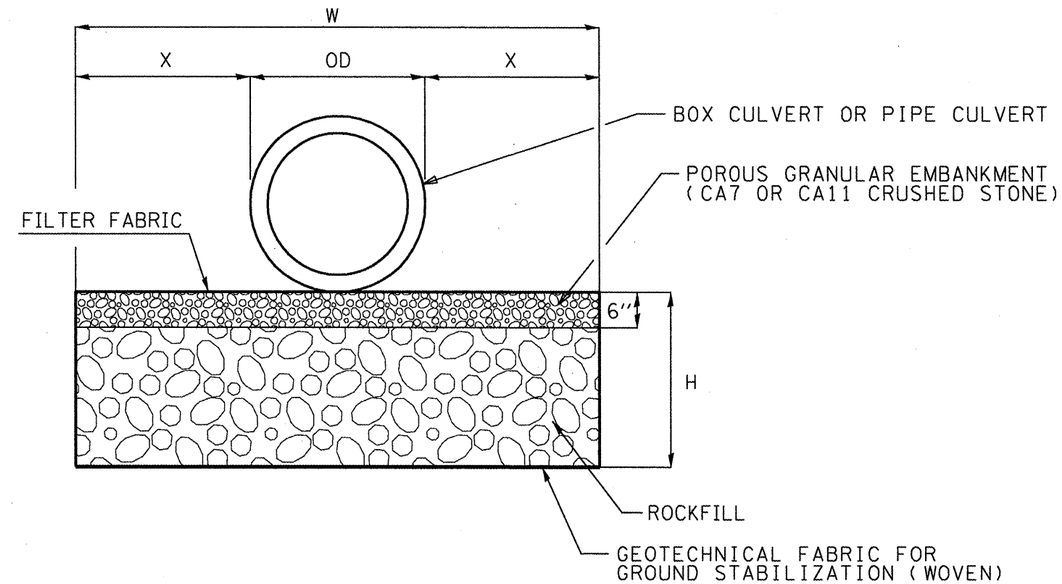

ALTERNATE II: FOR 18" AND GREATER UNDERCUT

CULVERT UNDERCUT QUANTITIES

CULVERT LOCATION	UNDERCUT DIMENSIONS* DEPTH 'h' (FT)	Width 'x' (FT)	Width 'OD' (FT)	Width 'w' (FT)	Length 'L' (FT)	TRENCH BACKFILL (CU. YDS.)	POROUS GRANULAR EMBANKMENT (TON)	ROCK FILL (TON)	GEOTECHNICAL FABRIC (SQ. YDS.)	FILTER FABRIC (SQ. YDS.)	REMOVAL AND DISPOSAL OF UNSUITABLE MATERIAL (CU. YD.)	ROCK EXCAVATION (CU. YD.)
PIPES												
674+01	4	2	4.25	8.25	62.0		19.4	135.9	56.8	111.9	75.8	
683+14	2	2	5.4	9.4	64.7		23.1	69.3	67.6	96.3	45.1	
698+70						10.2						
714+38	1	2	4.3	8.25	79.0		49.5		72.4	90.0		9.0
733+64.5	2	2	3.1	7.1	43.0		11.6	34.8	33.9	53.0	22.6	
743+12	3	2	4.25	8.25	97.0		30.4	151.9	88.9	153.6	88.9	
772+96.5	2	2	3.1	7.1	43.0		11.6	34.8	33.9	53.0	22.6	
864+33						9.9						
TOTAL						**20**	**146**	**427**	**354**	**558**	**255**	**9**

GENERAL NOTES:

1. Undercut if the Dynamic Cone Penetrometer tests indicate soil strength is less than 1 ton/sq ft.

2. DEFINITIONS:
   OD = Outside Diameter or outside width of box culvert
   h = Depth of undercut (for box culverts, the upper 6" shall be included in the cost of the various box culvert pay items).
   x = 2' for pipe culverts
   x = h or minimum 2 feet, which ever is greater for box culverts.
   W = Width of undercut = 2x + OD

3. Wrap porous granular material and rock fill in filter fabric. The fabric shall be according to the requirements of the applicable portions of section 1080 and section 282 with 6 or 8 oz/sy material allowed.

All dimensions are in inches (millimeters) unless otherwise noted.

FILE NAME = undercut_detail.dgn	USER NAME = jochumsjg	DESIGNED -	REVISED -	STATE OF ILLINOIS DEPARTMENT OF TRANSPORTATION	PIPE CULVRT UNDERCUT DETAIL	F.A.P RTE.	SECTION	COUNTY	TOTAL SHEETS	SHEET NO.
		DRAWN -	REVISED -			317	16W-2,RS-4;17W-1,RS-3	FULTON	240	128
	PLOT SCALE = 96.0000 '/ IN.	CHECKED -	REVISED -					CONTRACT NO. 88703		
	PLOT DATE = 3/22/2010	DATE -	REVISED -		SCALE: SHEET NO. OF SHEETS STA. TO STA.	FED. ROAD DIST. NO.	ILLINOIS	FED. AID PROJECT		

SLOPE STEPS DETAIL

TYPICAL CROSS-SECTION EMBANKMENT
CONSTRUCTION ON SIDEHILL

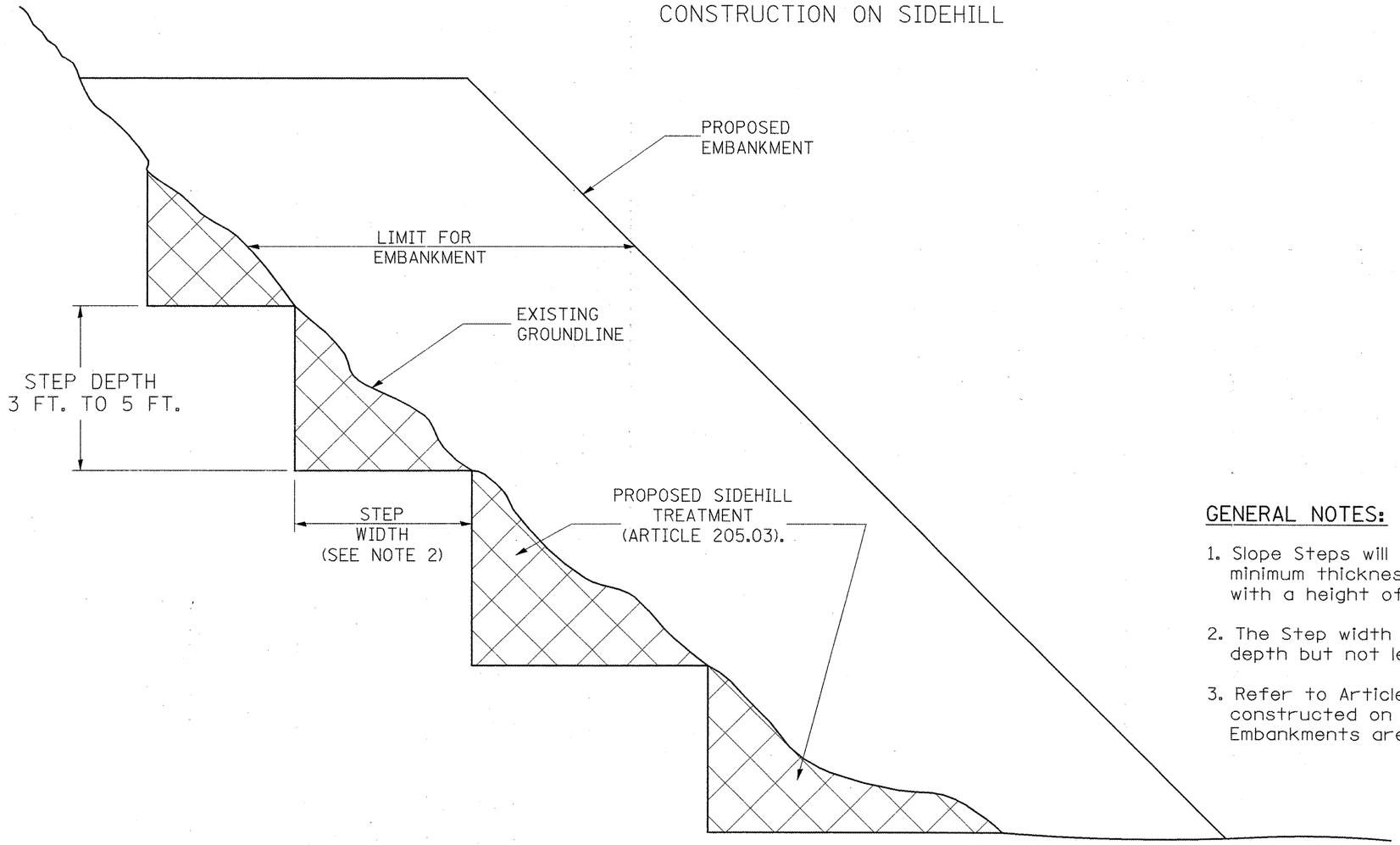

GENERAL NOTES:

1. Slope Steps will be required for all 12(300) minimum thickness "silver fills" and on a fills with a height of 10'(3.0m).
2. The Step width shall be twice the Step depth but not less than 6 feet.
3. Refer to Article 205.03 for Embankment to be constructed on Hillside or Slopes, or if existing Embankments are to be widened.

REPLACEMENT MATERIAL:

STANDARD EMBANKMENT
(IN ACCORDANCE WITH
205 OF THE STANDARD SPECIFACATION).

All dimensions are in inches (millimeters) unless otherwise noted.

1-1-97	RENUM. L-5.03, NEW REVISION BOX, REVISED TITLE	T.P.
	BOX, REVISED GENERAL NOTES.	
10-16-06	REVISED TO 2007 SPEC.	M.A.

STATE OF ILLINOIS
DEPARTMENT OF TRANSPORTATION

SLOPE STEPS DETAIL

NOT TO SCALE

CADD STD. 205001-D4

F.A.P RTE.	SECTION	COUNTY	TOTAL SHEETS	SHEET NO.
317	16W-2,RS-4;17W-1,RS-3	FULTON	240	129
		CONTRACT NO. 88703		
FED. ROAD DIST. NO.	ILLINOIS	FED. AID PROJECT		

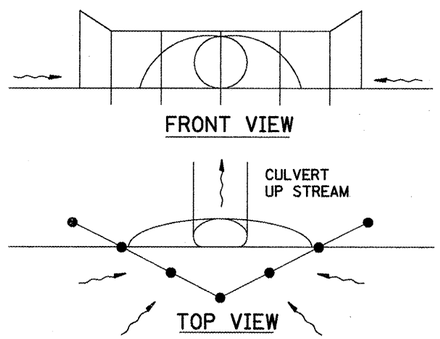

UPSTREAM PIPE CULVERT EROSION CONTROL

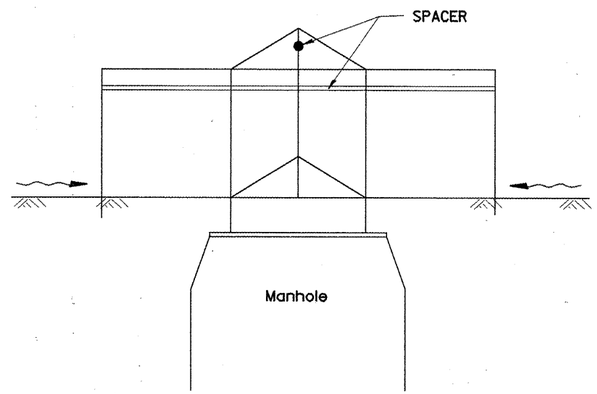

SIDE VIEW
A-A

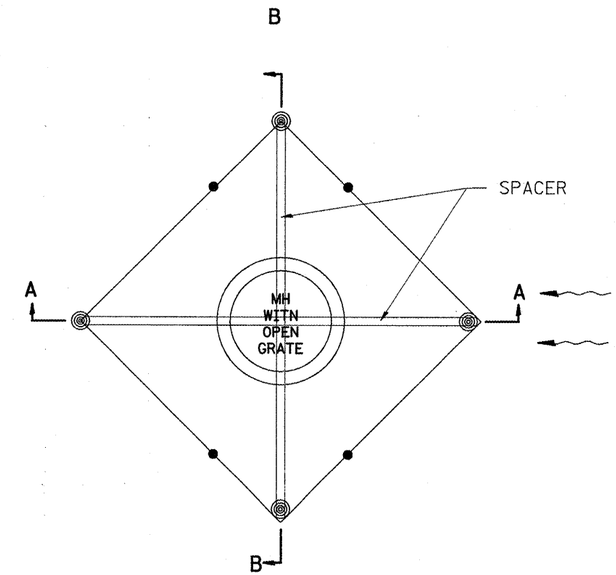

TOP VIEW

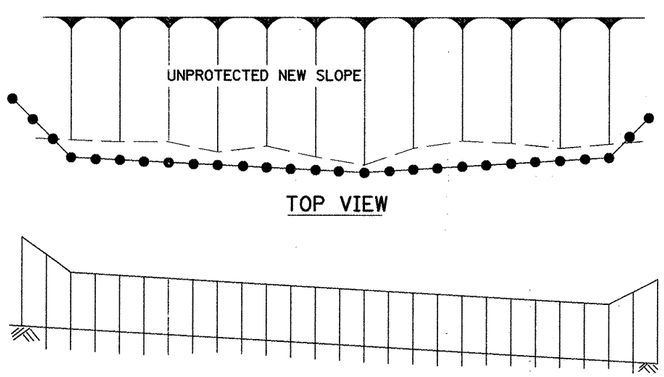

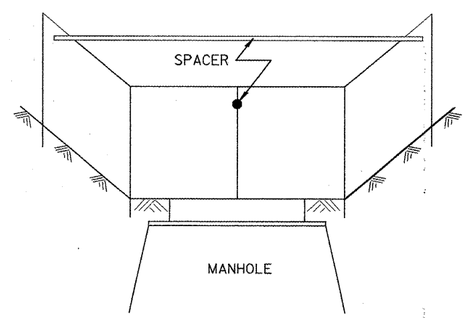

Front View
B-B

EROSION CONTROL
AT
OPEN GRATE MAN HOLE

GENERAL NOTES:

1. This work shall be performed in accordance with Sections 280 & 1081, of the Standard Specifications.
2. Additional Timber or Metal Post shall be installed, as needed.

All dimensions are in inches (millimeters) unless otherwise noted.

1-1-97		T.P.
3-11-03	ELIMINATED SILT FENCE DITCH CHECK	M.A.

STATE OF ILLINOIS
DEPARTMENT OF TRANSPORTATION

TYPICAL APPLICATION OF SILT FILTER FENCE

NOT TO SCALE

CADD STD. 280001-D4

F.A.P RTE.	SECTION	COUNTY	TOTAL SHEETS	SHEET NO.
317	16W-2,RS-4;17W-1,RS-3	FULTON	240	130
		CONTRACT NO. 88703		

FED. ROAD DIST. NO. | ILLINOIS | FED. AID PROJECT

CASE 1
(DITCH)

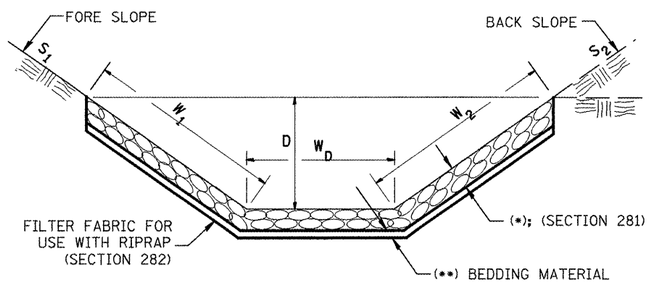

(*)				
LOCATION	WIDTH (1)	LENGTH	RIPRAP	FABRIC
STA TO STA	lin ft (m)	lin ft (m)	tons (m tons)	sq yds (m^2)
TOTAL				

(1) WIDTH = $W_1 + W_2 + W_D$

CASE 2
(CULVERT & SLOPE)

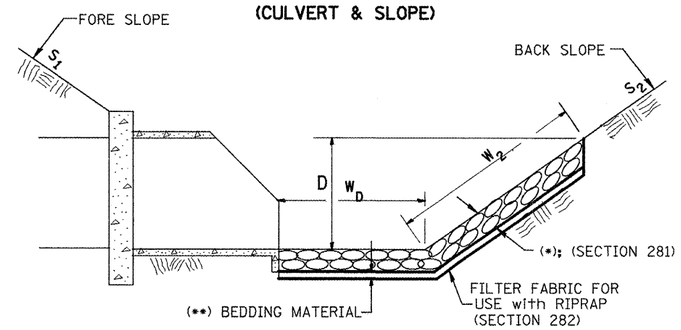

(*)				
LOCATION	WIDTH (1)	LENGTH	RIPRAP	FABRIC
STA TO STA	lin ft (m)	lin ft (m)	tons (m tons)	sq yds (m^2)
TOTAL				

(1) WIDTH = $W_2 + W_D$

CASE 3
(CULVERT)

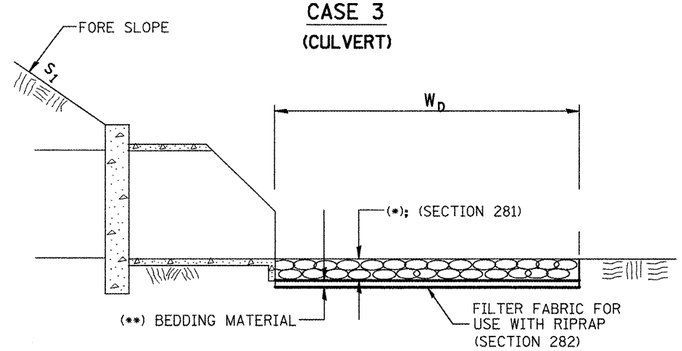

(*)				
LOCATION	WIDTH (1)	LENGTH	RIPRAP	FABRIC
STA TO STA	lin ft (m)	lin ft (m)	tons (m tons)	sq yds (m^2)
TOTAL				

(1) WIDTH = W_D

All slope ratios are expressed as units of vertical displacement to units of horizontal displacement (V:H).

All dimensions are in inches (millimeters) unless otherwise noted.

1-1-97	RENUM. A-12.02. NEW REVISION BOX	T.P.
12-1-97	CORRECT FILTER FABRIC LEADER ARROW	J.A.
10-16-06	REVISED TO 2007 SPEC.	M.A.

STATE OF ILLINOIS
DEPARTMENT OF TRANSPORTATION

RIPRAP DITCH FOR EROSION PROTECTION

NOT TO SCALE

CADD STD. 281001-D4

F.A.P RTE.	SECTION	COUNTY	TOTAL SHEETS	SHEET NO.
317	16W-2,RS-4;17W-1,RS-3	FULTON	240	131
		CONTRACT NO. 88703		

FED. ROAD DIST. NO. | ILLINOIS | FED. AID PROJECT

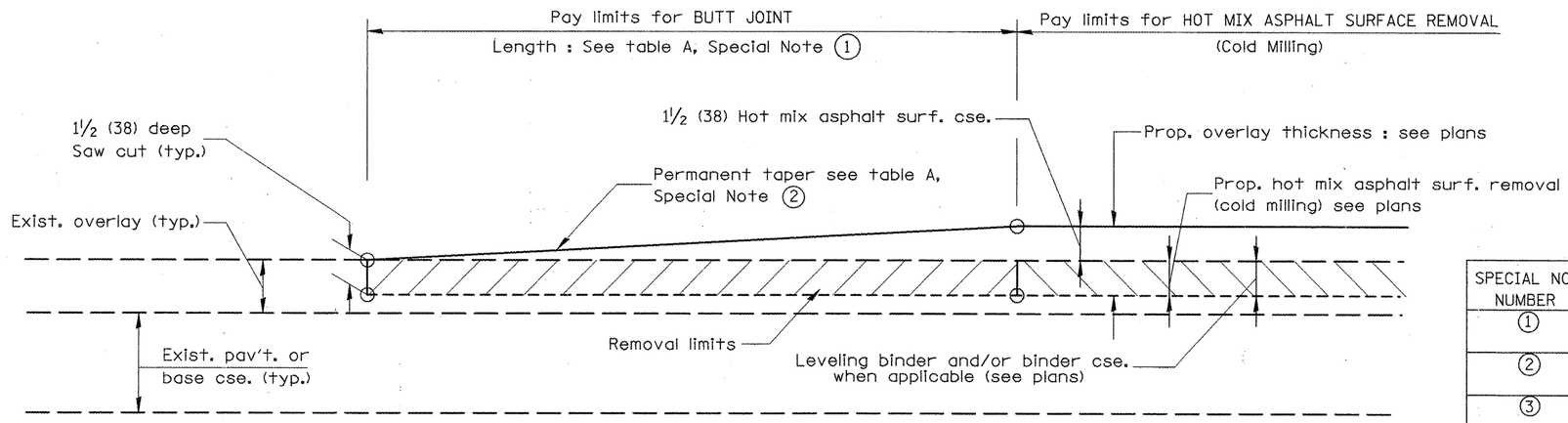

CASE 1 : WITH HOT MIX ASPHALT SURFACE REMOVAL (COLD MILLING)

TABLE A

(LENGTHS AND TAPER RATES)

SPECIAL NOTE NUMBER	ELEMENT	MAINLINE INTERSTATES & 4-LANE EXPRESSWAYS	ALL OTHERS
1	LENGTH OF BUTT JOINT	60'(18.0 m)	30'(9.0 m)
2	PERMANENT TAPER RATE	1:480	1:240
3	TEMPORARY RAMP TAPER RATE	1:80	1:40
4	TEMPORARY RAMP LENGTH	10'(3.0 m)	5'(1.5 m)
5	LENGTH OF BUTT JOINT	10'(3.0 m)	10'(3.0 m)

GENERAL NOTES

1. The work shall be done in accordance with Article 406.08 and the Special Provision for Butt Joints.
2. The pavement surface to be removed may be either bituminous or P.C. concrete. The work shall be performed in accordance with Article 440.04 and the Special Provisions for Butt Joints.
3. The saw cut joints shall be primed just prior to the placing of bituminous material. The work will be in accordance with the applicable portions of Article 406.05.

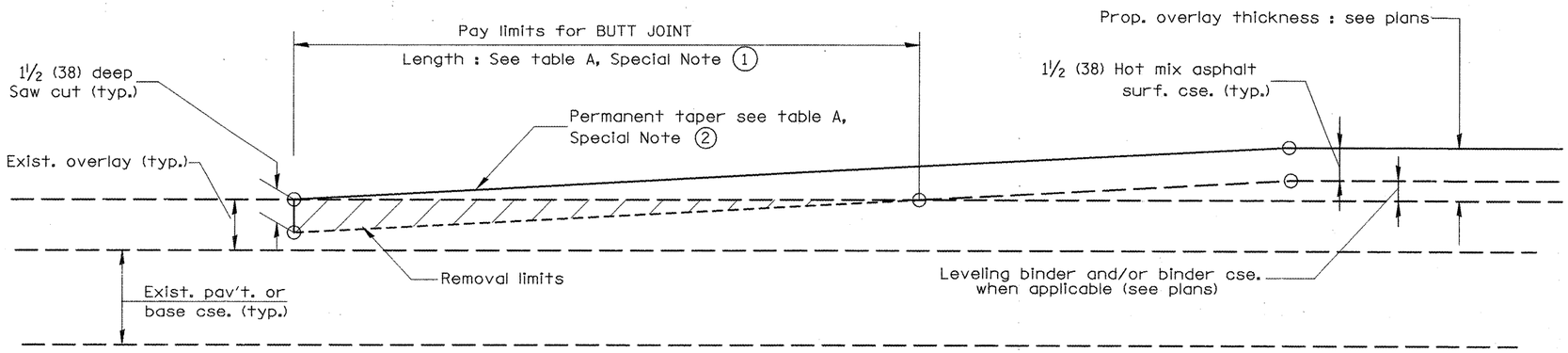

CASE 2 : NO HOT MIX ASHALT SURFACE REMOVAL (COLD MILLING)

All dimensions are in inches (millimeters) unless otherwise noted.

01-01-97	RENUM. C-23.01, NEW REVISION BOX	T.P.
04-01-97	CORRECTION TO DEPTH	J.A.
09-15-05	REVISED DESIGNER NOTE	M.M.A.
10-16-06	REVISED TO 2007 SPEC.	M.A.

STATE OF ILLINOIS
DEPARTMENT OF TRANSPORTATION

BUTT JOINTS

NOT TO SCALE

SHT. 1 OF 3
CADD STD. 406101-D4

F.A.P RTE.	SECTION	COUNTY	TOTAL SHEETS	SHEET NO.
317	16W-2,RS-4;17W-1,RS-3	FULTON	240	132
		CONTRACT NO. 88703		

FED. ROAD DIST. NO. | ILLINOIS | FED. AID PROJECT

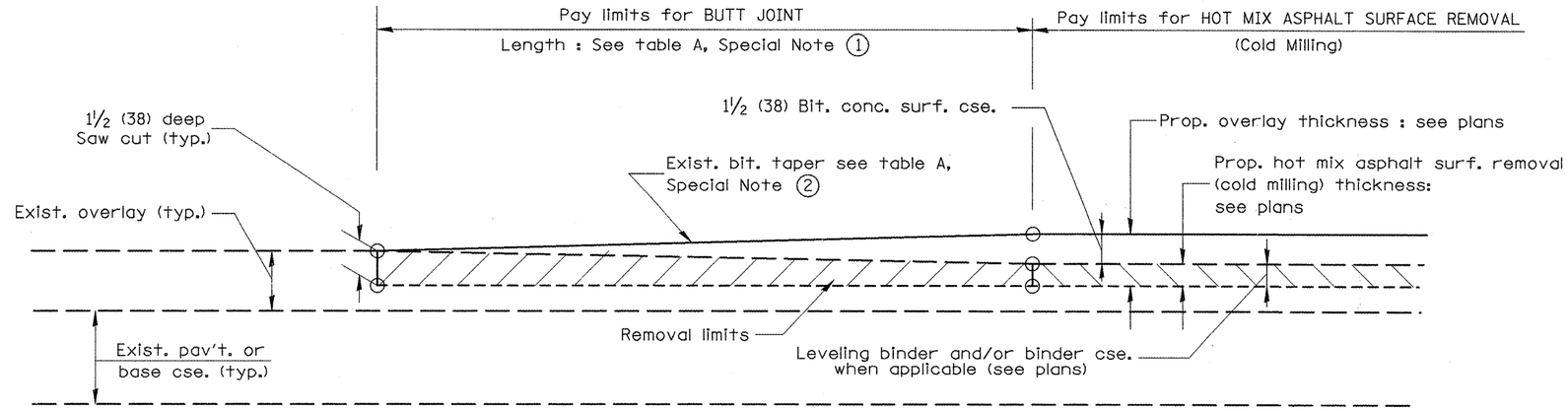

CASE 3 : WITH HOT MIX ASPHALT SURFACE REMOVAL (COLD MILLING)
TIE-IN TO EXISTING BITUMINOUS TAPER

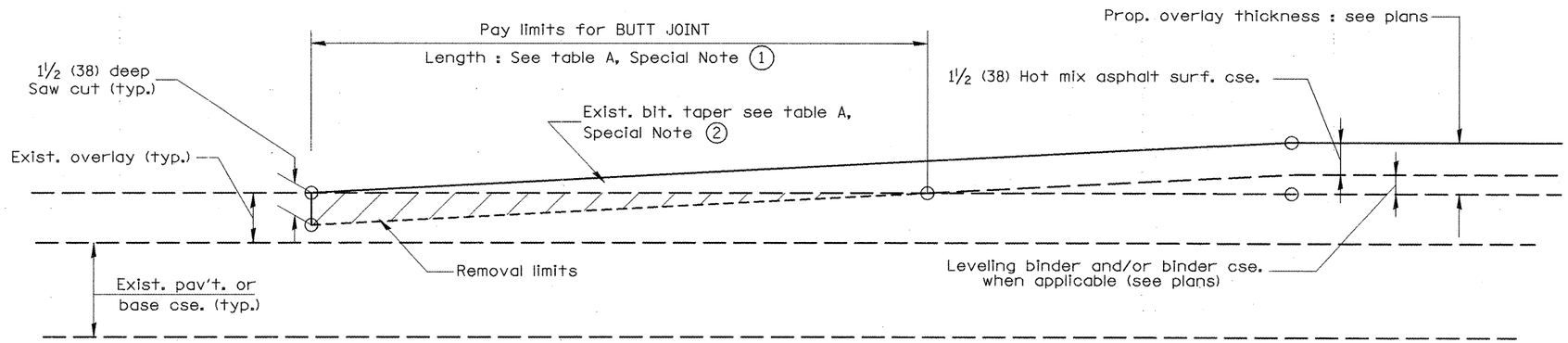

CASE 4 : NO HOT MIX ASPHALT SURFACE REMOVAL (COLD MILLING)
TIE-IN TO EXISTING BITUMINOUS TAPER

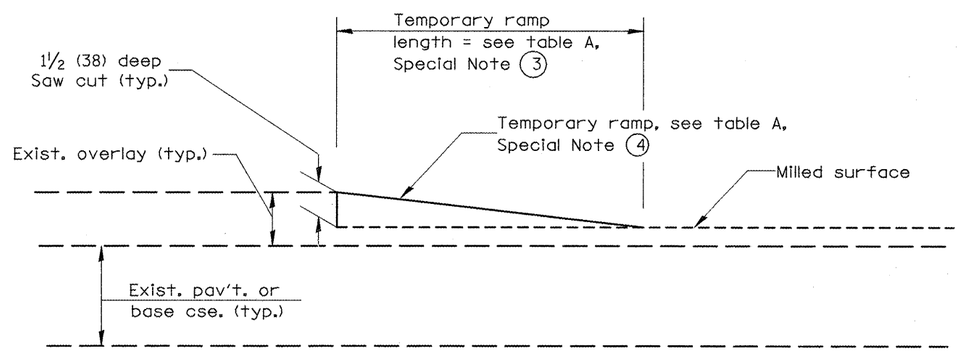

DETAIL TEMPORARY RAMP

All dimensions are in inches (millimeters) unless otherwise noted.

				STATE OF ILLINOIS DEPARTMENT OF TRANSPORTATION	BUTT JOINTS	F.A.P RTE.	SECTION	COUNTY	TOTAL SHEETS / SHEET NO.
						317	16W-2,RS-4;17W-1,RS-3	FULTON	240 / 133
								CONTRACT NO. 88703	
					NOT TO SCALE / SHT. 2 OF 3 / CADD STD. 406101-D4	FED. ROAD DIST. NO.	ILLINOIS	FED. AID PROJECT	

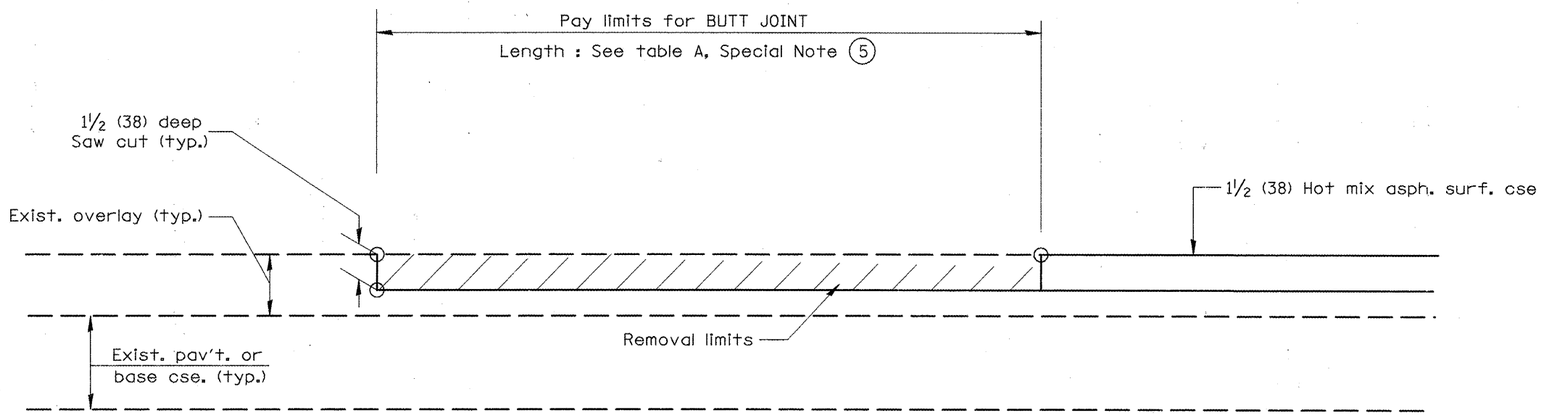

CASE 5 : WITH HOT MIX ASPHALT SURFACE REMOVAL (COLD MILLING)
TIE-IN TO EXISTING BITUMINOUS TAPER

All dimensions are in inches (millimeters) unless otherwise noted.

					STATE OF ILLINOIS DEPARTMENT OF TRANSPORTATION	BUTT JOINTS	F.A.P RTE.	SECTION	COUNTY	TOTAL SHEETS	SHEET NO.
							317	16W-2,RS-4;17W-1,RS-3	FULTON	240	134
						NOT TO SCALE SHT. 3 OF 3 CADD STD. 406101-D4			CONTRACT NO. 88703		
							FED. ROAD DIST. NO.	ILLINOIS	FED. AID PROJECT		

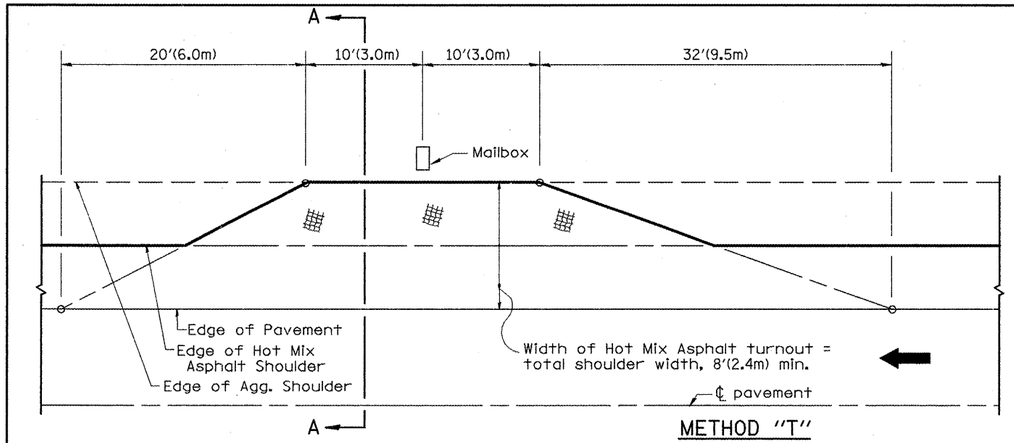

METHOD "T"

Typical Application

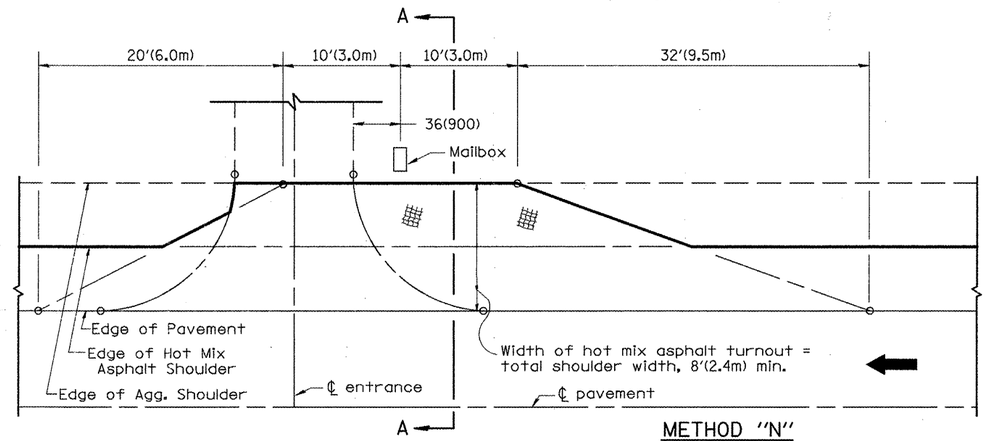

METHOD "N"

Mailbox on near side of entrance

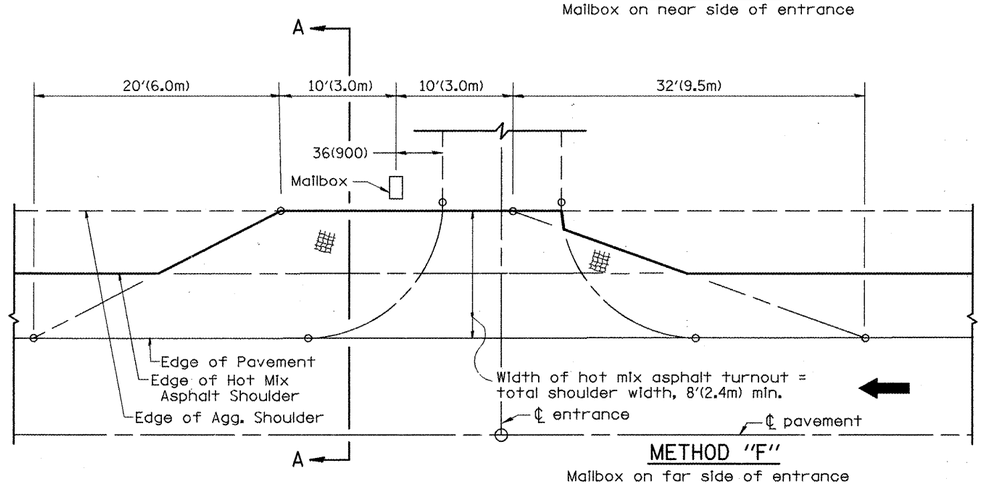

METHOD "F"

Mailbox on far side of entrance

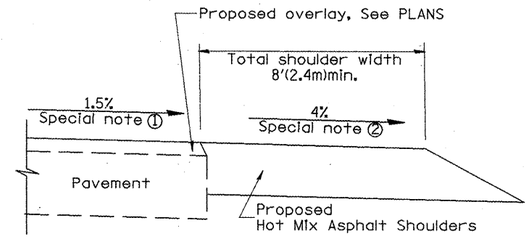

SECTION A-A

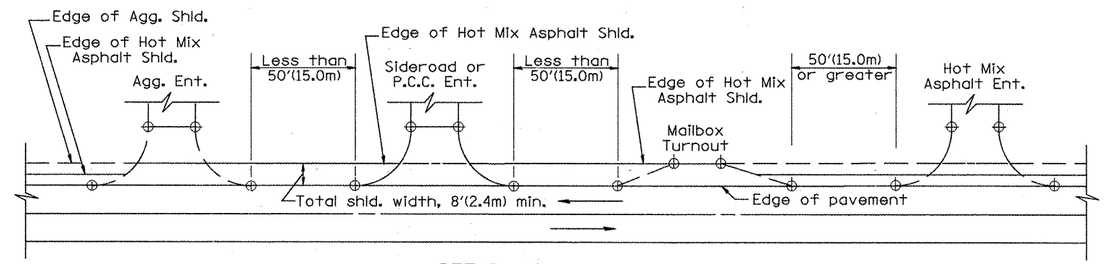

DETAIL A

SHOULDER TREATMENT FOR CLOSELY SPACED SIDEROADS, ENTRANCES, AND/OR MAILBOX TURNOUTS

GENERAL NOTES

1. Mailbox turnouts shall slope away from the pavement edge at a rate equal to the shoulder slope. See SECTION A-A.
2. The total shoulder width, 8'(2.4m) minimum, shall be paved between sideroads entrances and/or mailbox turnouts at locations where the distance between radius or taper control points is less than 50'(15.0m). See DETAIL A.
3. Mailboxes shall be mounted such that the face of the mailbox is 6(150) to 12(300) and the post a minimum of 24(600) from the edge of the turnout surfacing.

SPECIAL NOTES

① The mainline pavement cross-slope is 1.5% for tangent alignment. See PLANS for cross-slope on superelevated horizontal curves.

② The shoulder slope shall control the turnout slope. The standard cross-slope is 4% for tangent alignment. Through superelevated curves, the maximum pavement-shoulder breakover should not be greater than 10% for shoulders 6'(1.8m) and wider and 12% for shoulders 4'(1.2m) and less. Where 12(300) paved shoulders are provided, the breakover should be at the edge of the paved shoulder rather than at the pavement edge.

All dimensions are in inches (millimeters) unless otherwise noted.

01-01-97	RENUM. C-90.01, NEW REVISION BOX	T.P.
07-01-97	REVISE DESIGNER NOTES	J.A.
09-15-05	REVISED DESIGNER NOTE	M.M.A.
10-16-06	REVISED TO 2007 SPEC.	M.A.

STATE OF ILLINOIS
DEPARTMENT OF TRANSPORTATION

MAILBOX TURNOUTS FOR "3R" PROJECTS

NOT TO SCALE

CADD STD. 406201-D4

F.A.P RTE.	SECTION	COUNTY	TOTAL SHEETS	SHEET NO.
317	16W-2,RS-4;17W-1,RS-3	FULTON	240	135
		CONTRACT NO. 88703		
FED. ROAD DIST. NO.	ILLINOIS	FED. AID PROJECT		

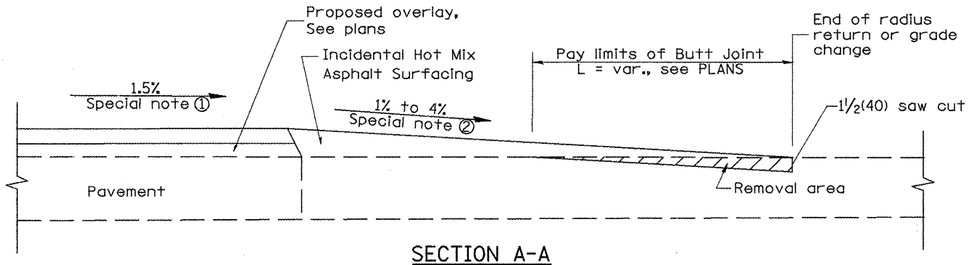

SECTION A-A
EXISTING PCC OR HOT MIX ASPHALT SIDEROAD

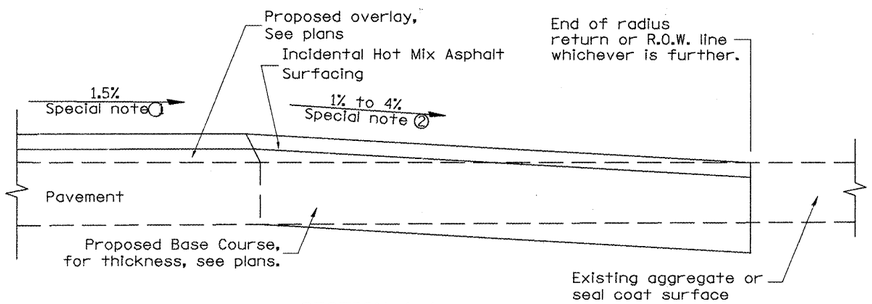

SECTION A-A
EXISTING AGGREGATE OR SEAL COAT SIDEROAD

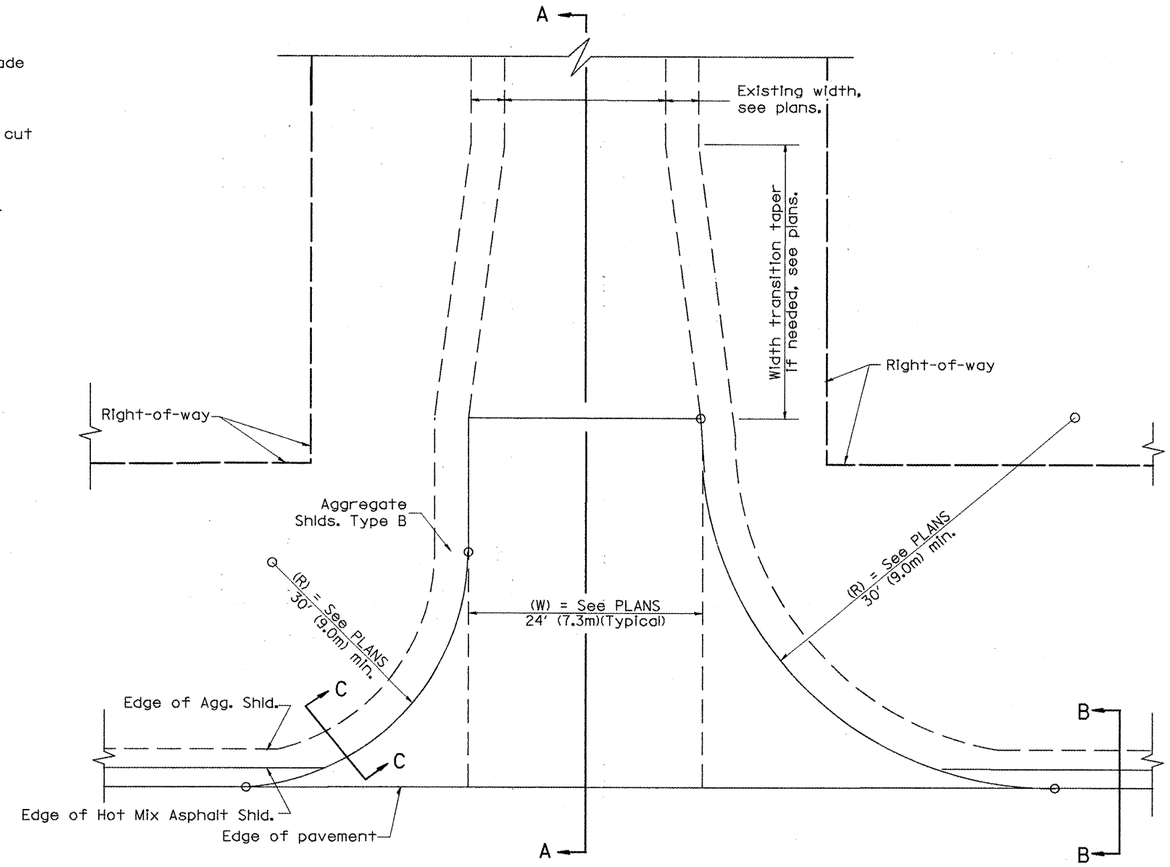

PLAN

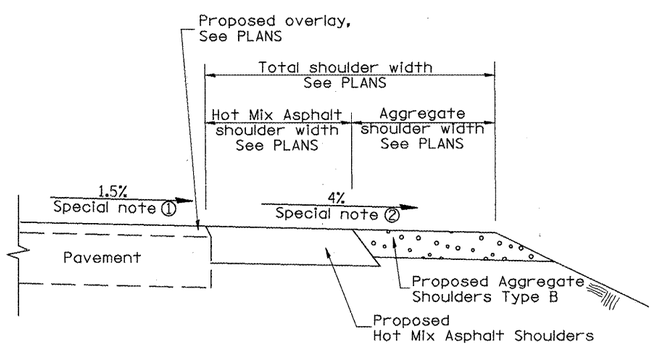

SECTION B-B
MAINLINE SHOULDER TREATMENT

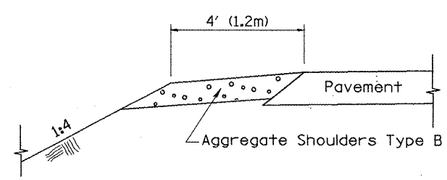

SECTION C-C
SIDEROAD SHOULDER TREATMENT

SPECIAL NOTES

① The mainline pavement cross-slope is 1.5% for tangent alignment. See Plans for cross-slope on superelevated horizontal curves.

② The sideroad profile should drain away from the mainline at 1% to 4% for 50' (15.0m) to 100' (30.0m), or as a minimum to the end of the radius return. When the sideroad is on the high side of a mainline superelevated curve, - 2% maximum should be provided in order to minimize breakover at the pavement edge. See plans for sideroad profiles.

All dimensions are in inches (millimeters) unless otherwise noted.

01-01-97	RENUM. C-105.02, NEW REVISION BOX	T.P.
07-01-97	REVISE DESIGNER NOTES	J.A.
09-15-05	REVISED DESIGNER NOTE	M.M.A.
10-16-06	REVISED TO 2007 SPEC.	M.A.

STATE OF ILLINOIS
DEPARTMENT OF TRANSPORTATION

RURAL SIDEROADS FOR "3R" PROJECTS

NOT TO SCALE

CADD STD. 406401-D4

F.A.P RTE.	SECTION	COUNTY	TOTAL SHEETS	SHEET NO.
317	16W-2,RS-4;17W-1,RS-3	FULTON	240	136
		CONTRACT NO. 88703		
FED. ROAD DIST. NO.	ILLINOIS	FED. AID PROJECT		

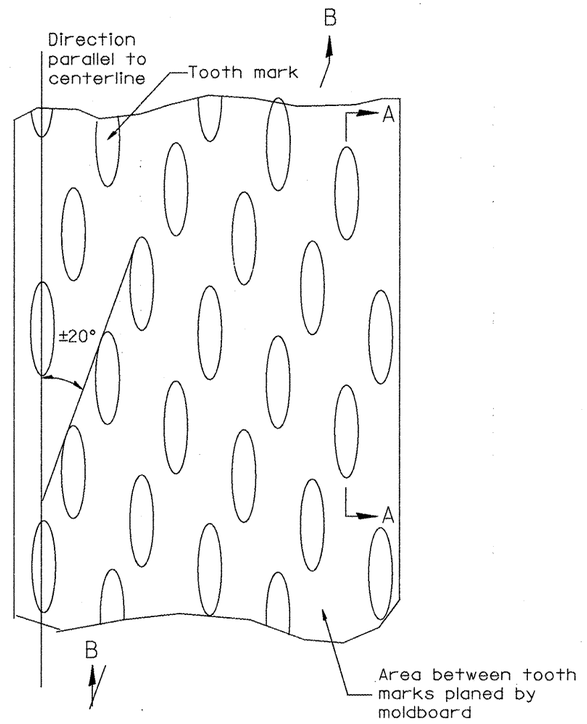

PLAN

General notes:

1. Coldmilling shall consist of two processes: Cutting with carbide teeth mounted on a rotating drum, and planing with a moldboard mounted immediately behind the cutting drum.
2. Other similar patterns will be acceptable if they consist of a smooth, flat, planed surface interspersed with a pattern of discontinuous longitudinal striations.

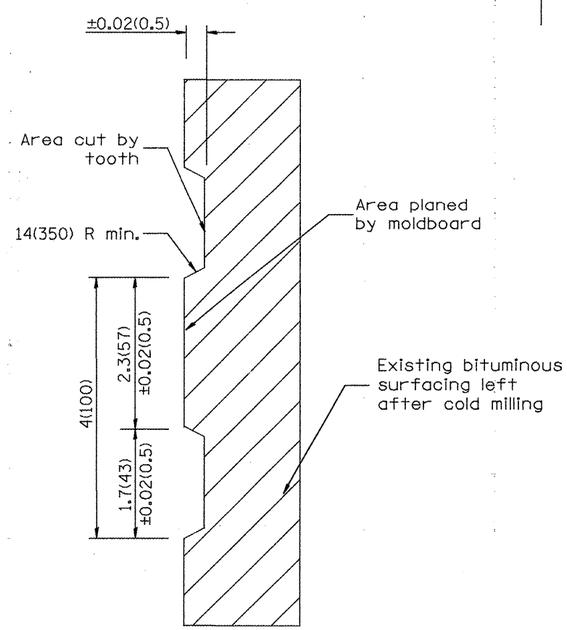

SECTION A-A

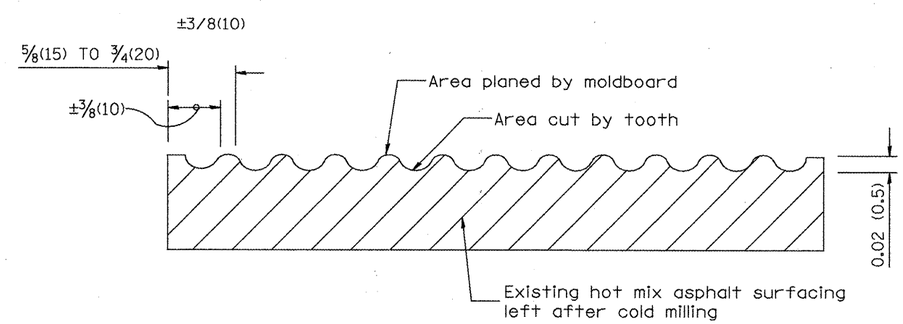

SECTION B-B PROJECTED
PERPENDICULAR TO CENTERLINE

All dimensions are in inches (millimeters) unless otherwise noted.

01-01-97	RENUM. C-104.01, NEW REVISION BOX	T.P.
04-20-98	REMOVED MILLING DETAIL FROM STANDARD	J.A.
09-08-98	CORRECT NOTE LEADER PLACEMENT	R.W.
10-16-06	REVISED TO 2007 SPEC.	M.A.

STATE OF ILLINOIS
DEPARTMENT OF TRANSPORTATION

HOT MIX ASPHALT SURFACE REMOVAL (COLD MILLING)

NOT TO SCALE

CADD STD. 440001-D4

F.A.P RTE.	SECTION	COUNTY	TOTAL SHEETS	SHEET NO.
317	16W-2,RS-4;17W-1,RS-3	FULTON	240	137

CONTRACT NO. 88703

FED. ROAD DIST. NO. | ILLINOIS | FED. AID PROJECT

* MINIMUM 1' LAP ON U BARS

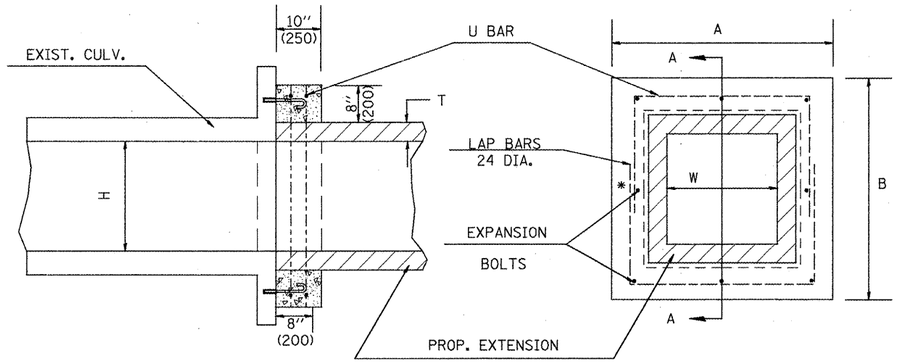

SECTION A - A

END VIEW

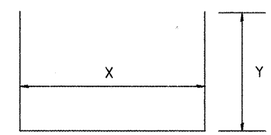

#4 U BAR
FOUR REQUIRED
PER COLLAR

GENERAL NOTES

1. The collar shall be constructed entirely of CLASS SI CONCRETE and in accordance with the applicable portions of section 503 of the Standard Specifications. REINFORCEMENT BARS shall conform to section 508.

2. Expansion bolts shall consist of approved expansions anchors, and 3/4" (M20) hook bolts which conform to Section 1006.09. These bolts shall extend at least 8"(200) into the new concrete.

* Dimensions for ASTM C789.

DIMENSIONS

EXISTING BOX		A	B	T *	EACH COLLAR				
					CL SI	REINFORCEMENT BARS			EXPANSION BOLTS
W ft (mm)	H ft (mm)				CU YD (m^3)	X	Y	POUNDS (kg)	NO.
2 (600)	2 (600)	4'-0" (1.22m)	4'-0" (1.22m)	4(100)	0.27(0.21)	3'-4" (1.02m)	26(660)	20 (9)	8
3 (900)	2 (600)	5'-0" (1.52m)	4'-0" (1.22m)	4(100)	0.32(0.24)	4'-4" (1.32m)	26(660)	23 (10.5)	8
3 (900)	2.5 (750)	5'-0" (1.52m)	4'-6" (1.37m)	4(100)	0.34(0.26)	4'-4" (1.32m)	29(737)	24.5 (11)	8
3 (900)	3 (900)	5'-0" (1.52m)	5'-0" (1.52m)	4(100)	0.36(0.28)	4'-4" (1.32m)	32(813)	26 (12)	8
3 (900)	4 (1200)	5'-2" (1.57m)	6'-2" (1.88m)	5(125)	0.41(0.31)	4'-6" (1.37m)	39(991)	29 (13)	10
4 (1200)	3 (900)	6'-2" (1.88m)	5'-2" (1.57m)	5(125)	0.41(0.31)	5'-6" (1.68m)	33(838)	29 (13)	10
4 (1200)	4 (1200)	6'-2" (1.88m)	6'-2" (1.88m)	5(125)	0.45(0.34)	5'-6" (1.68m)	39(991)	32 (14.5)	12
4 (1200)	5 (1500)	6'-4" (1.93m)	7'-4" (2.24m)	6(150)	0.51(0.39)	5'-8" (1.73m)	3'-10" (1.17m)	36 (16)	14
5 (1500)	4 (1200)	7'-4" (2.24m)	6'-4" (1.93m)	6(150)	0.51(0.39)	6'-8" (2.03m)	3'-4" (1.02m)	35 (16)	14
5 (1500)	5 (1500)	7'-4" (2.24m)	7'-4" (2.24m)	6(150)	0.55(0.42)	6'-8" (2.03m)	3'-10" (1.17m)	38 (17)	16
5 (1500)	6 (1800)	7'-6" (2.29m)	8'-6" (2.59m)	7(175)	0.60(0.46)	6'-10" (2.08m)	4'-5" (1.35m)	42 (19)	16
6 (1800)	4 (1200)	8'-6" (2.59m)	6'-6" (1.98m)	7(175)	0.56(0.43)	7'-10" (2.39m)	3'-5" (1.04m)	39 (18)	14
6 (1800)	5 (1500)	8'-6" (2.59m)	7'-6" (2.29m)	7(175)	0.60(0.46)	7'-10" (2.39m)	3'-11" (1.19m)	42 (19)	16
6 (1800)	6 (1800)	8'-6" (2.59m)	8'-6" (2.59m)	7(175)	0.64(0.49)	7'-10" (2.39m)	4'-5" (1.35m)	44.5 (20)	16
6 (1800)	8 (2400)	8'-8" (2.64m)	10'-8" (3.25m)	8(200)	0.74(0.57)	8'-0" (2.44m)	5'-6" (1.68m)	51 (23)	18
8 (2400)	8 (2400)	10'-8" (3.25m)	10'-8" (3.25m)	8(200)	0.82(0.63)	10'-0" (3.05m)	5'-6" (1.68m)	56 (25.5)	20

QUANTITIES

CALC. BY: _____ DATE:

CHECKED BY: _____ DATE:

QUANTITY CALCULATIONS ARE ON FILE AT THE DISTRICT 4 OFFICE; BUREAU OF PROJECT IMPLEMENTATION; DOCUMENTATION SECTION

All dimensions are in inches (millimeters) unless otherwise noted.

01-01-97	RENUM. J-12.01, METRICS, NEW REVISION BOX, REVISED TITLE BOX, ADDED QUANTITY CALCULATION BOX	T.P.
10-16-06	REV. TO 2007 SPEC., REINF. BARS COL.	M.A.

STATE OF ILLINOIS
DEPARTMENT OF TRANSPORTATION

COLLAR FOR BOX CULVERT EXTENSIONS

NOT TO SCALE

CADD STD. 540001-D4

F.A.P RTE.	SECTION	COUNTY	TOTAL SHEETS	SHEET NO.
317	16W-2,RS-4;17W-1,RS-3	FULTON	240	138

CONTRACT NO. 88703

FED. ROAD DIST. NO. | ILLINOIS | FED. AID PROJECT

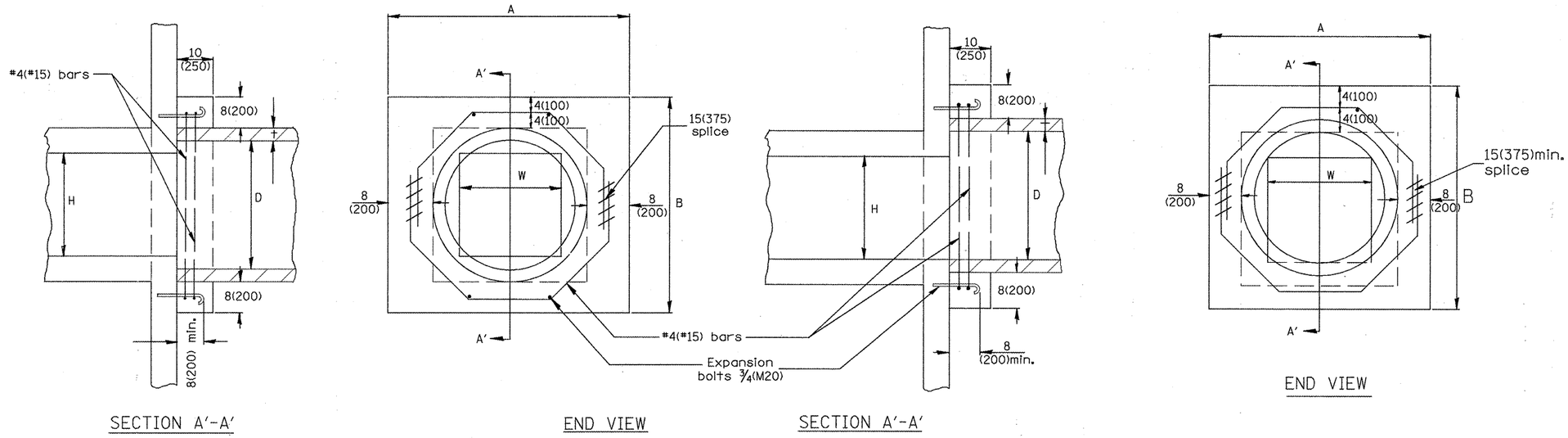

DOWN STREAM

UP STREAM

EXISTING BOX W	EXISTING BOX H	A	B	D	t	EACH COLLAR: CONC. COLLAR CU. YD. (m³)	REINFORCEMENT BARS G	REINFORCEMENT BARS L	REINFORCEMENT BARS LBS. (KG)	EXPANSION BOLT EACH
12(300) PIPE		32 (810)	32 (810)	12 (300)	2(50)	0.18(0.14)	10 (254)	4'-7" (1.40m)	12(5.5)	4
18(450) PIPE		39 (990)	39 (990)	18 (450)	2½(65)	0.24(0.18)	12¾ (324)	5'-6" (1.68m)	15(7)	4
24(600) PIPE		3'-10" (1.17m)	3'-10" (1.17m)	24 (600)	3(75)	0.30(0.23)	15¾ (400)	6'-6" (1.98m)	17(8)	4
24(600)	24(600)	4'-5" (1.35m)	4'-5" (1.35m)	30 (750)	3½(90)	0.37(0.28)	18¾ (416)	7'-6" (2.29m)	20(9)	4
30(750)	30(750)	5'-0" (1.52m)	5'-0" (1.52m)	36 (900)	4(100)	0.45(0.34)	21½ (546)	8'-5" (2.57m)	22.5(10)	8
36(900)	36(900)	5'-7" (1.7m)	5'-7" (1.7m)	42 (1050)	4½(115)	0.50(0.38)	24½ (622)	9'-5" (2.87m)	25(11)	10
42(1050)	42(1050)	6'-2" (1.88m)	6'-2" (1.88m)	48 (1200)	5(125)	0.61(0.47)	27¼ (692)	10'-4" (3.15m)	28(12.5)	10
48(1200)	48(1200)	6'-9" (2.06m)	6'-9" (2.06m)	54 (1350)	5½(140)	0.80(0.61)	30¼ (768)	11'-4" (3.45m)	30(14)	10
42" PIPE		5'-8"	5'-8"	42	5	0.53	25	9'-7"	26	10
30" PIPE		4'-6"	4'-6"	30	4	0.38	19	7'-7"	20	8

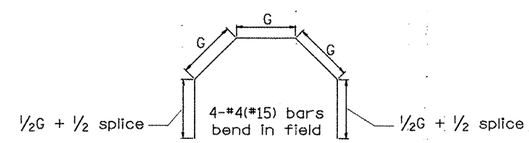

GENERAL NOTES

1. The collar shall be constructed entirely of CLASS SI CONCRETE and in accordance with the applicable portions of Section 503 of the Standard Specifications. Reinforcement Bars shall conform to Section 508.
2. Expansion Bolts shall consist of approved Expansion Anchors, and ¾(M20) Hook Bolts which conform to Section 1006.09. These Bolts shall extend at least 8(200) into the new Concrete.

QUANTITIES

CALC. BY: _____ DATE:

CHECKED BY: _____ DATE:

QUANTITY CALCULATIONS ARE ON FILE AT THE DISTRICT 4 OFFICE; BUREAU OF PROJECT IMPLEMENTATION; DOCUMENTATION SECTION

All dimensions are in inches (millimeters) unless otherwise noted.

01-01-97	RENUM. J-11.02, NEW REVISION BOX, REVISED TITLE BOX, ADDED QUANTITY CALCULATION BOX	T.P.
10-16-06	REV. TO 2007 SPEC., REINF. BATS COL.	M.A.

STATE OF ILLINOIS
DEPARTMENT OF TRANSPORTATION

PIPE CULVERT EXTENSION COLLAR (WITH END SECTION)

NOT TO SCALE

CADD STD. 542001-D4

F.A.P RTE.	SECTION	COUNTY	TOTAL SHEETS	SHEET NO.
317	16W-2,RS-4;17W-1,RS-3	FULTON	246	139
		CONTRACT NO. 88703		

FED. ROAD DIST. NO. | ILLINOIS | FED. AID PROJECT

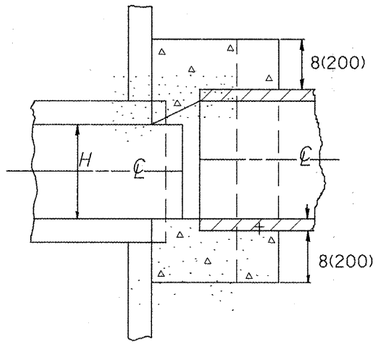

SECTION A-A

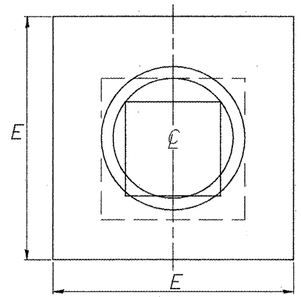

END VIEW

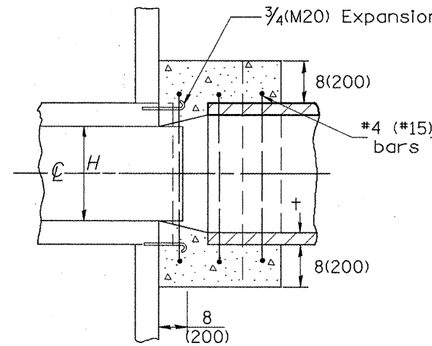

SECTION A-A

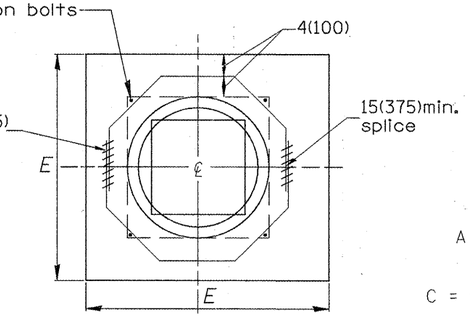

END VIEW

$$A = B = \frac{\frac{D - W}{2} + t + 8(200)}{\cos \theta}$$

$$C = t \tan \theta \, [D + 2t + 16(410)] + 10(250)$$

$$G = \frac{D + 2t + 8(200)}{2.4142 \, [\cos \theta]}$$

(Note: 'G' is based upon maximum skewed length)

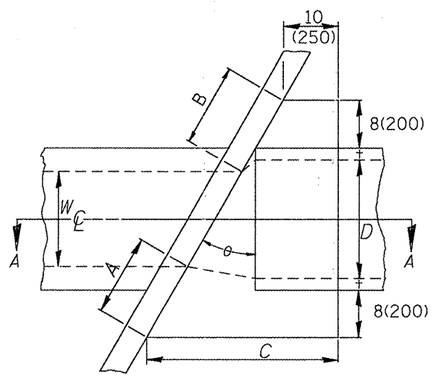

PLAN VIEW
UP STREAM

NOTE:
Dimensions are shown in Plan View of Up Stream End while Reinforcement is shown in plan view of Down Stream End.

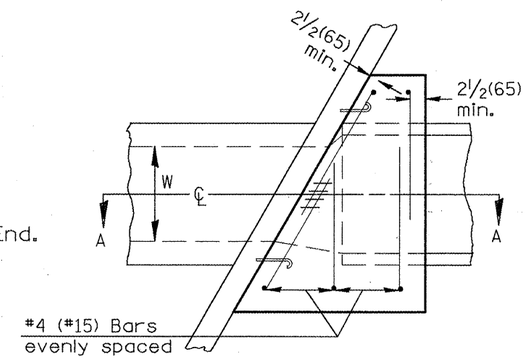

PLAN VIEW
DOWN STREAM

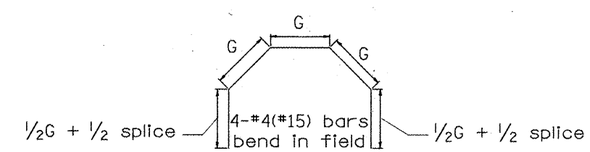

GENERAL NOTES

1. The collar shall be constructed entirely of CLASS SI CONCRETE and in accordance with the applicable portions of section 503 of the Standard Specifications. Reinforcement bars shall conform to section 508.
2. Expansion bolts shall consist of approved expansion anchors, and 3/4 (M20) hook bolts which conform to section 1006.09. These bolts shall extend at least 8(200) into the new concrete.

EXISTING BOX								EACH COLLAR				
								CONCRETE	REINFORCEMENT BARS			EXPAN. BOLTS
W	H	θ	A	B	C	D	E	t	CU. YD. (m^3)	G	L	KG(LBS.)	EACH
42" PIPE		44°	18"	18"	76"	42"	68"	5"	2.3	35"	16 @ 12'-11"	138	10
42" PIPE		14°	14"	14"	27"	42"	68"	5"	1.0	26"	6 @ 9'-11"	40	10

QUANTITIES

CALC. BY: _____ DATE:

CHECKED BY: _____ DATE:

QUANTITY CALCULATIONS ARE ON FILE AT THE DISTRICT 4 OFFICE; BUREAU OF PROJECT IMPLEMENTATION; DOCUMENTATION SECTION

All dimensions are in inches (millimeters) unless otherwise noted.

01-01-97	RENUM. J-11.03, NEW REVISION BOX, REVISED	T.P.
	TITLE BOX, ADDED QUANTITY CALCULATION BOX	
10-16-06	REVISED TO 2007 SPEC.	M.A.

STATE OF ILLINOIS
DEPARTMENT OF TRANSPORTATION

SKEWED PIPE CULVERT EXTENSION COLLAR (WITH END SECTION)

NOT TO SCALE

CADD STD. 542011-D4

F.A.P RTE.	SECTION	COUNTY	TOTAL SHEETS	SHEET NO.
317	16W-2,RS-4;17W-1,RS-3	FULTON	240	140
		CONTRACT NO. 88703		
FED. ROAD DIST. NO.	ILLINOIS	FED. AID PROJECT		

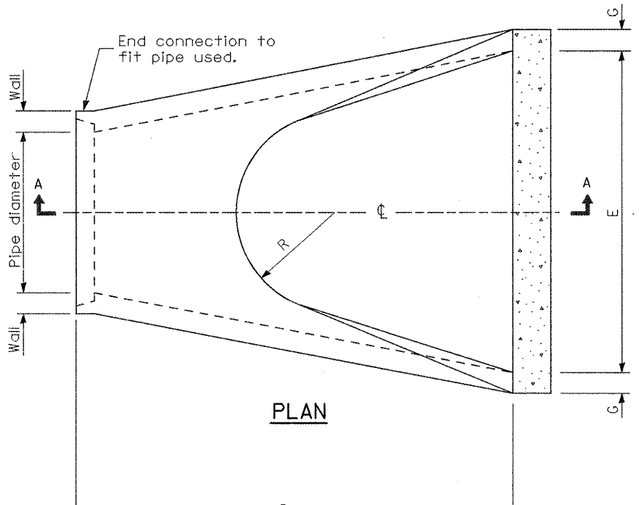

PLAN

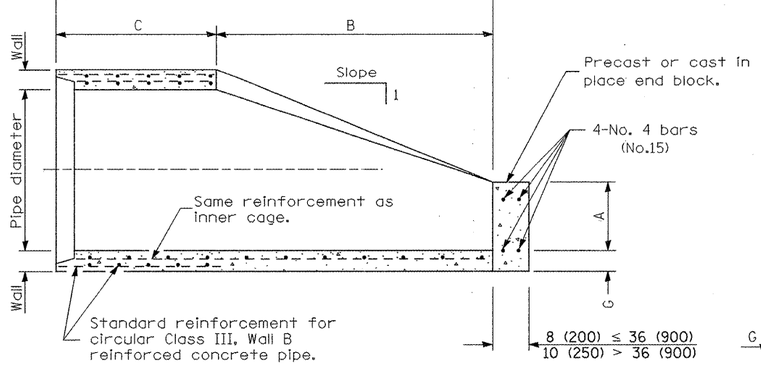

SECTION A-A

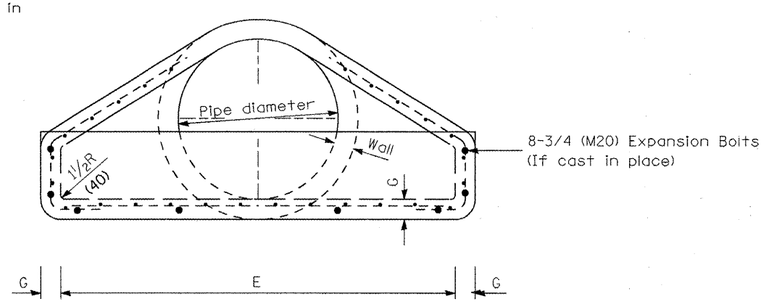

END VIEW

PIPE DIA.	APPROX. QTY. lbs (kg)	WALL	A	B	C	D	E	G	R	APPROX. SLOPE
12 (300)	530 (240)	2 (51)	4 (102)	24 (610)	4′-0 7/8″ (1.241 m)	6′-0 7/8″ (1.851 m)	24 (610)	2 (51)	9 (229)	1:2.4
15 (375)	740 (335)	2 1/4 (57)	6 (152)	27 (686)	3′-10″ (1.168 m)	6′-1″ (1.854 m)	30 (762)	2 1/4 (57)	11 (280)	1:2.4
18 (450)	990 (450)	2 1/2 (64)	9 (229)	27 (686)	3′-10″ (1.168 m)	6′-1″ (1.854 m)	36 (914)	2 1/2 (64)	12 (305)	1:2.4
21 (525)	1280 (580)	2 3/4 (70)	9 (229)	35 (889)	38 (965)	6′-1″ (1.854 m)	3′-6″ (1.067 m)	2 3/4 (70)	13 (330)	1:2.4
24 (600)	1520 (690)	3 (76)	9 1/2 (241)	3′-7 1/2″ (1.105 m)	30 (762)	6′-1 1/2″ (1.867 m)	4′-0″ (1.219 m)	3 (76)	14 (356)	1:2.5
27 (675)	1930 (875)	3 1/4 (83)	10 1/2 (267)	4′-0″ (1.219 m)	25 1/2 (648)	6′-1 1/2″ (1.867 m)	4′-6″ (1.372 m)	3 1/4 (83)	14 1/2 (368)	1:2.4
30 (750)	2190 (995)	3 1/2 (89)	12 (305)	4′-6″ (1.375 m)	19 3/4 (502)	6′-1 3/4″ (1.874 m)	5′-0″ (1.524 m)	3 1/2 (89)	15 (381)	1:2.5
33 (825)	3200 (1450)	3 3/4 (95)	13 1/2 (343)	4′-10 1/2″ (1.486 m)	39 1/4 (997)	8′-1 3/4″ (2.483 m)	5′-6″ (1.676 m)	3 3/4 (95)	17 1/2 (445)	1:2.5
36 (900)	4100 (1860)	4 (102)	15 (381)	5′-3″ (1.6 m)	34 3/4 (883)	8′-1 3/4″ (2.483 m)	6′-0″ (1.829 m)	4 (102)	20 (508)	1:2.5
42 (1050)	5380 (2440)	4 1/2 (114)	21 (533)	5′-3″ (1.6 m)	35 (889)	8′-2″ (2.489 m)	6′-6″ (1.981 m)	4 1/2 (114)	22 (559)	1:2.5
48 (1200)	6550 (2970)	5 (127)	24 (610)	6′-0″ (1.829 m)	26 (660)	8′-2″ (2.489 m)	7′-0″ (2.134 m)	5 (127)	22 (559)	1:2.5
54 (1350)	8240 (3740)	5 1/2 (140)	27 (686)	5′-5″ (1.651 m)	35 (889)	8′-4″ (2.54 m)	7′-6″ (2.286 m)	5 1/2 (140)	24 (610)	1:2.0
60 (1500)	8730 (3960)	6 (152)	35 (889)	5′-0″ (1.524 m)	39 (991)	8′-3″ (2.515 m)	8′-0″ (2.438 m)	5 (127)	*	1:1.9
66 (1650)	10710 (4860)	6 1/2 (165)	30 (762)	6′-0″ (1.829 m)	27 (686)	8′-3″ (2.515 m)	8′-6″ (2.591 m)	5 1/2 (140)	*	1:1.7
72 (1800)	12520 (5680)	7 (178)	36 (914)	6′-6″ (1.981 m)	21 (533)	8′-3″ (2.514 m)	9′-0″ (2.743 m)	6 (152)	*	1:1.8
78 (1950)	14770 (6700)	7 1/2 (191)	36 (914)	7′-6″ (2.286 m)	21 (533)	9′-3″ (2.819 m)	9′-6″ (2.896 m)	6 1/2 (165)	*	1:1.8
84 (2100)	18160 (8240)	8 (203)	36 (914)	7′-6 1/2″ (2.299 m)	21 (533)	9′-3 1/2″ (2.832 m)	10′-0″ (3.048 m)	6 1/2 (165)	*	1:1.6

* Radius as furnished by manufacturer

GENERAL NOTES

All slope ratios are expressed as units of vertical displacement to units of horizontal displacement (V:H).

All dimensions are in inches (millimeters) unless otherwise noted.

10-16-06	REVISED TO 2007 SPEC.	M.A.	

STATE OF ILLINOIS
DEPARTMENT OF TRANSPORTATION

PRECAST REINFORCED CONCRETE FLARED DROP BOX END SECTION

NOT TO SCALE

CADD STD. 542301-D4

F.A.P RTE.	SECTION	COUNTY	TOTAL SHEETS	SHEET NO.
317	16W-2,RS-4;17W-1,RS-3	FULTON	240	141
		CONTRACT NO. 88703		
FED. ROAD DIST. NO.	ILLINOIS	FED. AID PROJECT		

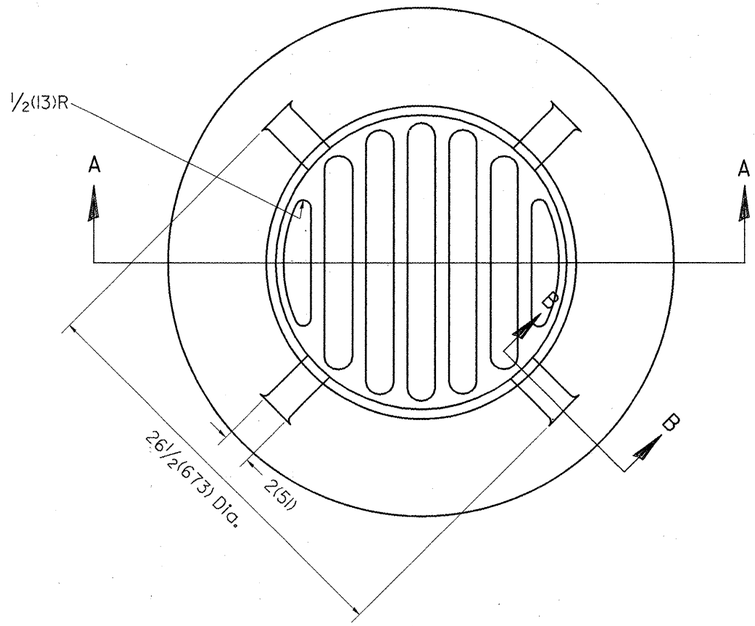

PLAN

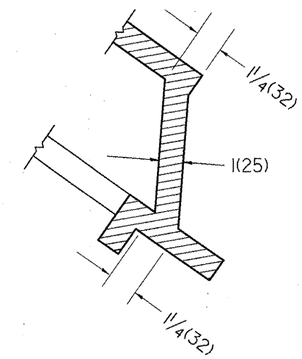

SECTION B - B

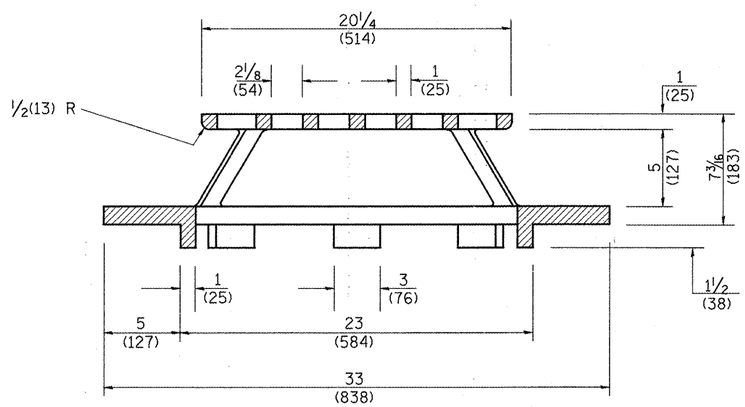

SECTION A - A

GENERAL NOTES

1. MATERIAL - Cast Gray Iron
   Weight 209 lbs (95 kg)

All dimensions are in inches (millimeters) unless otherwise noted.

01-01-97	RENUM. B-10.02, NEW REVISION BOX	T.P.
10-16-06	REVISED TO 2007 SPEC.	M.A.

STATE OF ILLINOIS
DEPARTMENT OF TRANSPORTATION

TYPE 37 GRATE

NOT TO SCALE

CADD STD. 604301-D4

F.A.P RTE.	SECTION	COUNTY	TOTAL SHEETS	SHEET NO.
317	16W-2,RS-4;17W-1,RS-3	FULTON	240	142
		CONTRACT NO. 88703		
FED. ROAD DIST. NO.	ILLINOIS	FED. AID PROJECT		

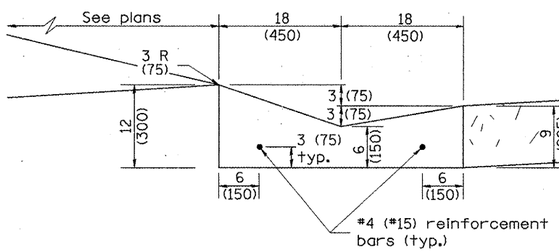

SHOULDER EDGE GUTTER

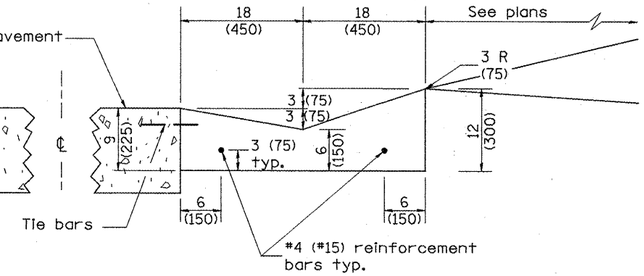

PAVEMENT EDGE GUTTER

TYPE A GUTTER (MODIFIED)

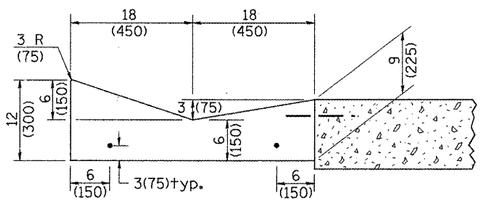

SECTION A-A

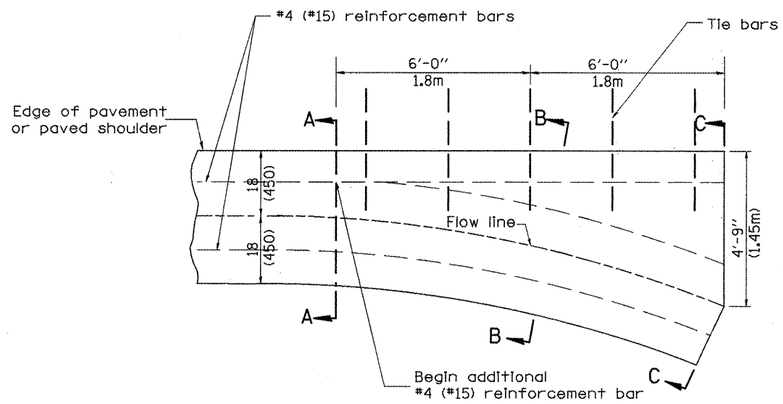

PLAN

QUANTITY

Section C-C to A-A= 1.2 cu. yd. (0.92 m^3) concrete.

GENERAL NOTES:

1. TYPE A GUTTER (MODIFIED) shall conform to the the applicable portions of Section 606.
2. Tie bars shall be No. 6 (No. 20) at 24" (600mm) centers unless otherwise shown.
3. Gutter, gutter inlets, gutter outlets, and gutter entrances shall be tied to rigid pavement in accordance with details shown on Standard 420001.
4. Joints shall be constructed in accordance with Article 606.06.
5. Welded wire fabric shall conform to Article 1006.10(c)(1), and shall not be less than 58 lbs/100 sq.ft. (2.83 kg/m^2).

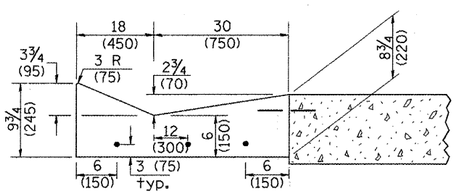

SECTION B-B

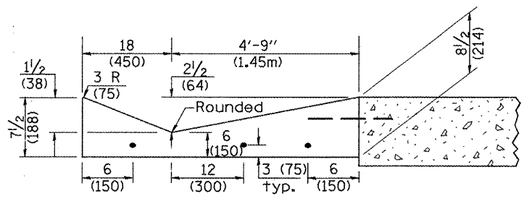

SECTION C-C

INLET

QUANTITIES	
CALC. BY:	DATE:
CHECKED BY:	DATE:

QUANTITY CALCULATIONS ARE ON FILE AT THE DISTRICT 4 OFFICE; BUREAU OF PROJECT IMPLEMENTATION; DOCUMENTATION SECTION

All dimensions are in inches (millimeters) unless otherwise noted.

01-01-97	RENUM. A-1.02, NEW REVISION BOX, ELIMINATED	T.P.	01-10-07	REVISED QUANTITY	M.A.
	EXPANSION ANCHOR TIES		11-16-07	REVISED QUANTITY	M.A.
02-28-02	ENTRANCE TYPICALS REVISED	M.A.			
10-16-06	REVISED TO 2007 SPEC.	M.A.			

STATE OF ILLINOIS
DEPARTMENT OF TRANSPORTATION

NOT TO SCALE

TYPE A GUTTER, (MODIFIED)
(INLET, OUTLET & ENTRANCE)

SHT. 1 OF 3
CADD STD. 606101-D4

F.A.P RTE.	SECTION	COUNTY	TOTAL SHEETS	SHEET NO.
317	16W-2,RS-4;17W-1,RS-3	FULTON	240	143
		CONTRACT NO. 88703		

FED. ROAD DIST. NO. | ILLINOIS | FED. AID PROJECT

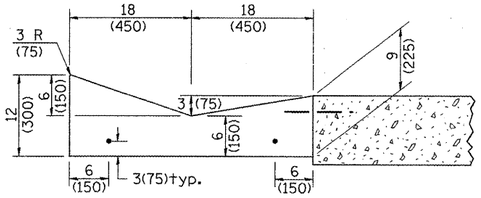

SECTION A-A

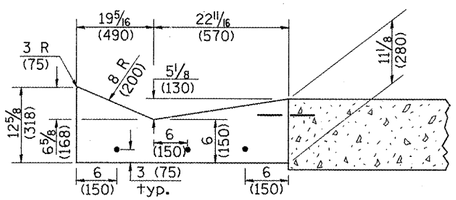

SECTION B-B

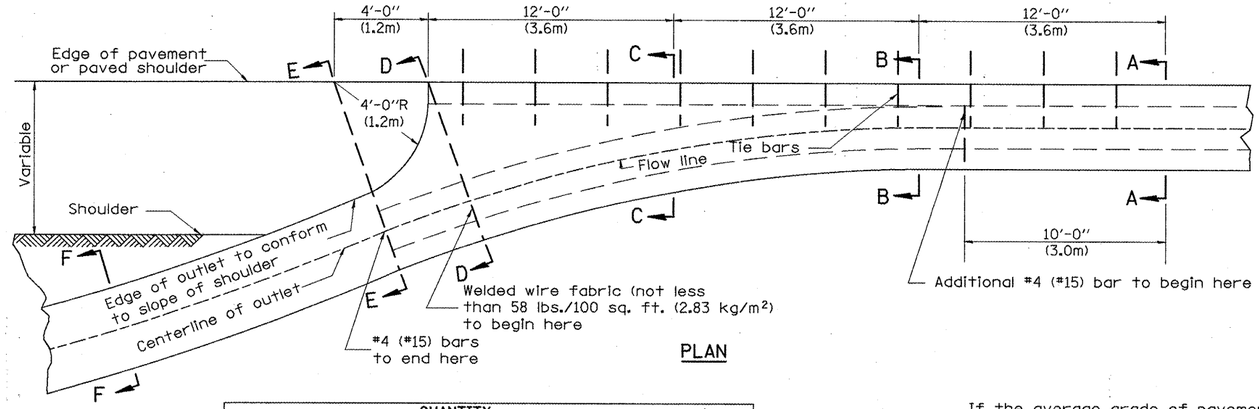

PLAN

QUANTITY

Section A-A to E-E= 4.5 cu. yd. (3.36 m³) concrete.
Section E-E to F-F= 0.10 cu. yd./ft. (0.26 m³/m) concrete.

If the average grade of pavement for the distance from section A-A to section D-D exceeds 2%, this distance shall be increased 6 ft. (1.8 m) for each 1% increase in grade. A quantity adjustment is required.

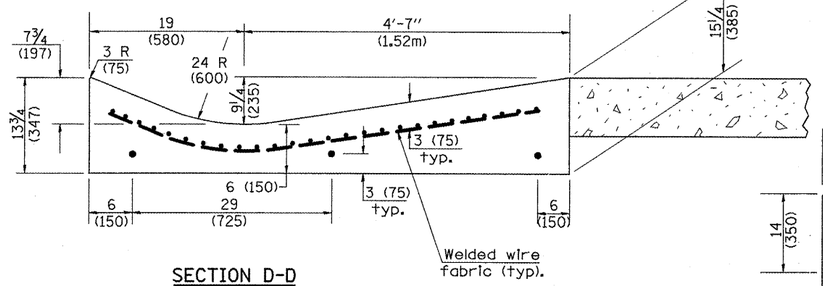

SECTION D-D

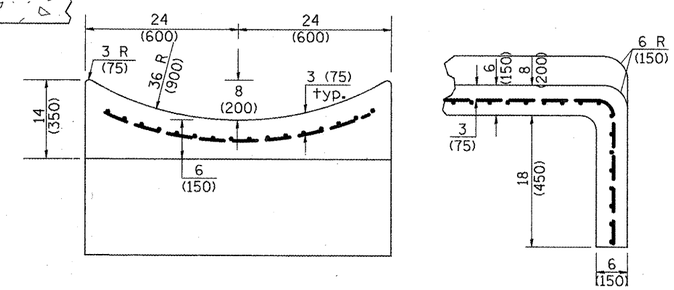

SECTIONS AT END OF OUTLET
(CURTAIN WALL)

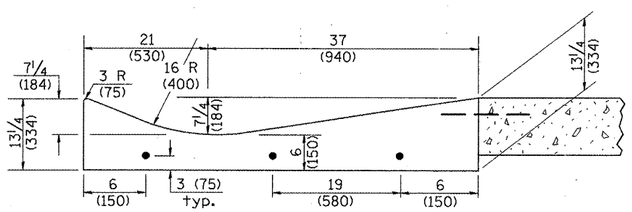

SECTION C-C

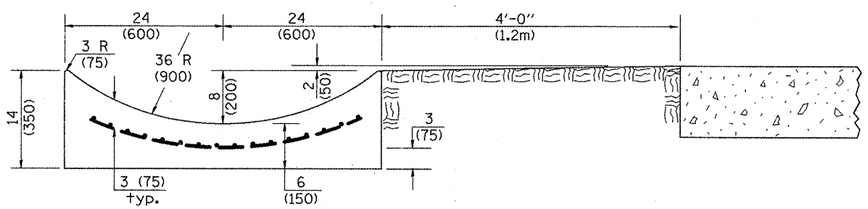

SECTION E-E

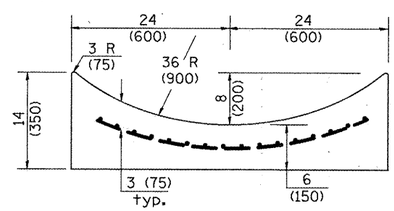

SECTION F-F

QUANTITY

Curtain Wall = 0.1 cu. yd. (0.08 m³) concrete.

QUANTITIES

CALC. BY: _____ DATE:
CHECKED BY: _____ DATE:

QUANTITY CALCULATIONS ARE ON FILE AT THE DISTRICT 4 OFFICE; BUREAU OF PROJECT IMPLEMENTATION; DOCUMENTATION SECTION

OUTLET

All dimensions are in inches (millimeters) unless otherwise noted.

STATE OF ILLINOIS
DEPARTMENT OF TRANSPORTATION

NOT TO SCALE

TYPE A GUTTER, (MODIFIED)
(INLET, OUTLET & ENTRANCE)

SHT. 2 OF 3
CADD STD. 606101-D4

F.A.P RTE.	SECTION	COUNTY	TOTAL SHEETS	SHEET NO.
317	16W-2,RS-4;17W-1,RS-3	FULTON	240	144
		CONTRACT NO. 88703		
FED. ROAD DIST. NO.	ILLINOIS	FED. AID PROJECT		

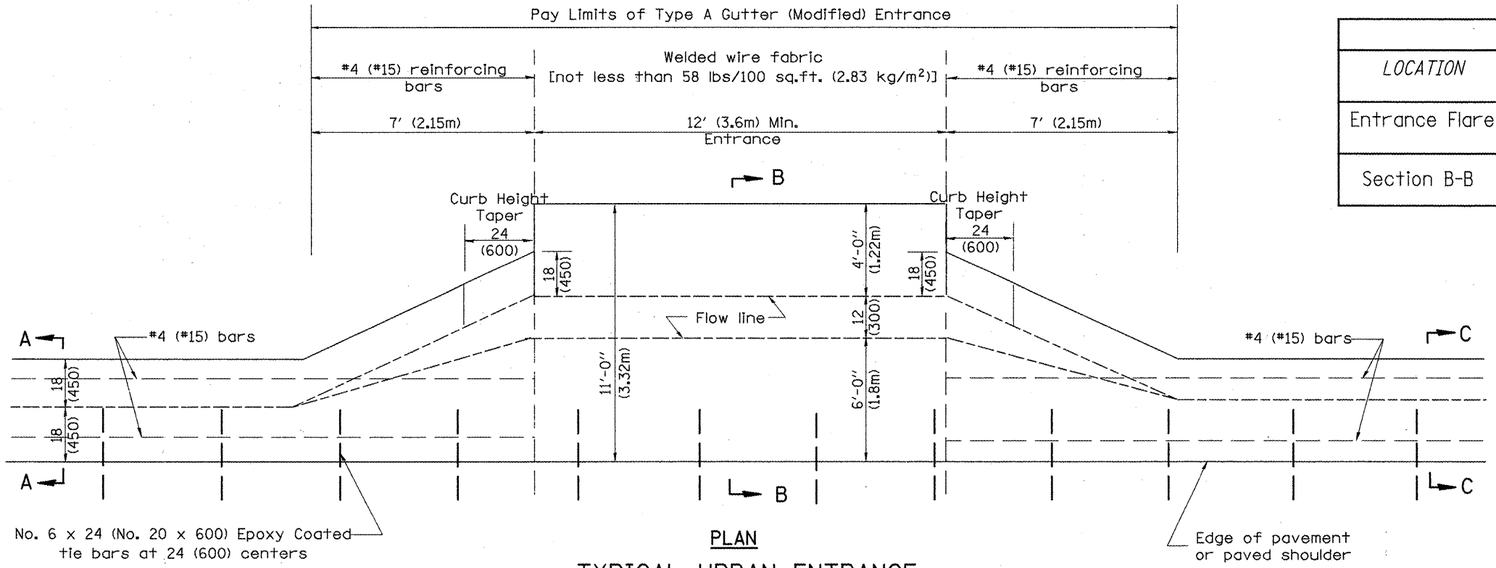

PLAN

TYPICAL URBAN ENTRANCE

QUANTITY CALCULATION			
LOCATION	*LENGTH*	*NON-COMMERCIAL 6 (150)*	*COMMERCIAL ENTRANCE 8 (200)*
Entrance Flare	7 Ft (2.15 m) Urban 14 Ft (4.30 m) Rural	0.15 Cu Yd / Ft (0.37 Cu M / M)	0.18 Cu Yd / Ft (0.45 Cu M / M)
Section B-B	See Plans	0.23 Cu Yd / Ft (0.57 Cu M / M)	0.28 Cu Yd / Ft (0.70 Cu M / M)

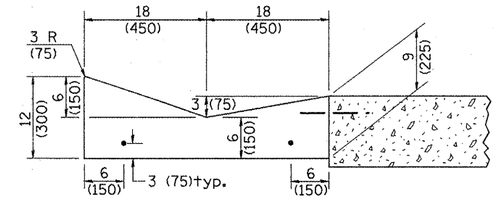

SECTION A-A & C-C

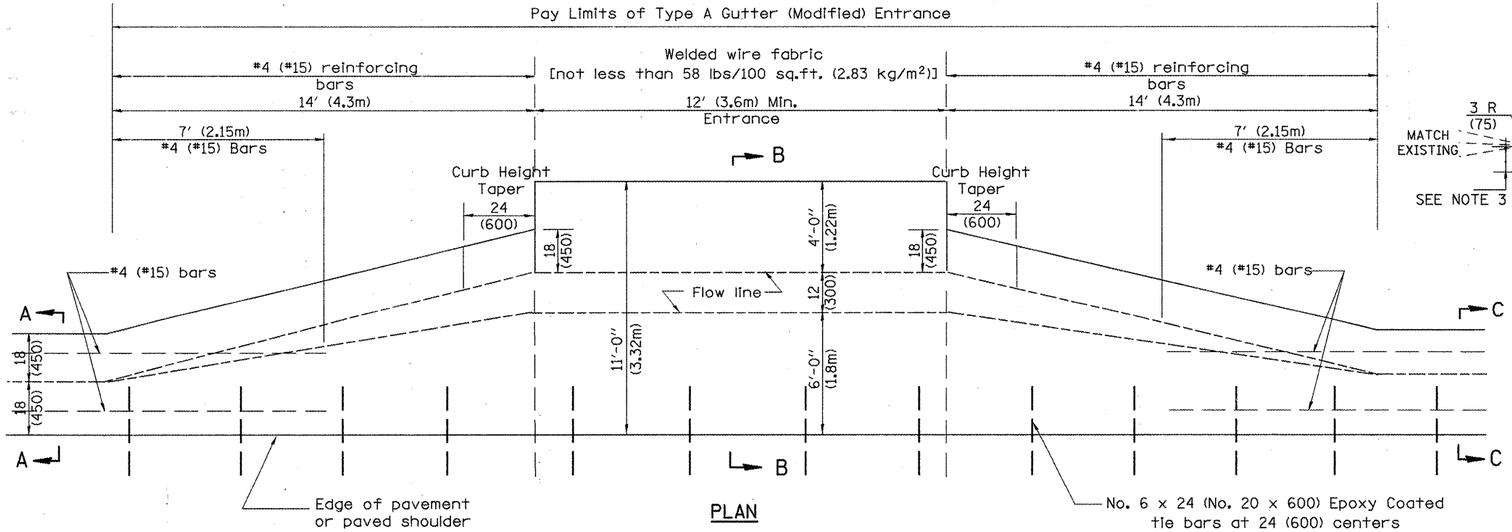

PLAN

TYPICAL RURAL ENTRANCE

ENTRANCE

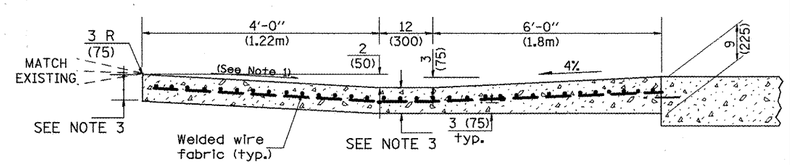

SECTION B-B

GENERAL NOTES

1.) Slope may be increased from 4% (min.) to 6% (max.) in order to match the existing.

2.) The cross-slope is to be constructed as given in the plans from back turnout to where driveway matches existing.

3.) For Non-Commercial Entrances the driveway thickness shall be 6 (150). For Commercial Entrances the driveway thickness shall be 8 (200).

QUANTITIES

CALC. BY: _____ DATE:

CHECKED BY: _____ DATE:

QUANTITY CALCULATIONS ARE ON FILE AT THE DISTRICT 4 OFFICE; BUREAU OF PROJECT IMPLEMENTATION; DOCUMENTATION SECTION

All dimensions are in inches (millimeters) unless otherwise noted.

STATE OF ILLINOIS
DEPARTMENT OF TRANSPORTATION

NOT TO SCALE

TYPE A GUTTER, (MODIFIED)
(INLET, OUTLET & ENTRANCE)

SHT. 3 OF 3
CADD STD. 606101-D4

F.A.P RTE.	SECTION	COUNTY	TOTAL SHEETS	SHEET NO.
317	16W-2,RS-4;17W-1,RS-3	FULTON	240	145
		CONTRACT NO. 88703		

FED. ROAD DIST. NO. | ILLINOIS | FED. AID PROJECT

PERMANENT SURVEY TIES

○ Permanent Survey Tie
□ Section Corner, 1/4 Corner, or other land corner.

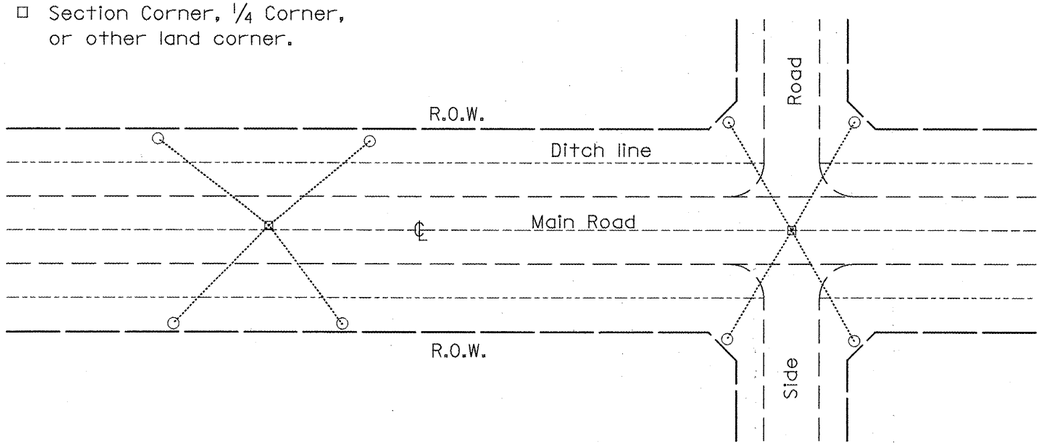

TYPICAL APPLICATION

GENERAL NOTES

1. The marker shall be cast in place of Class SI Concrete.
2. Tie marker shall be installed after the final seeding has been completed unless otherwise specified by the Engineer.
3. The tie distances to the section corner shall be measured and recorded by the IDOT Chief of Surveys.

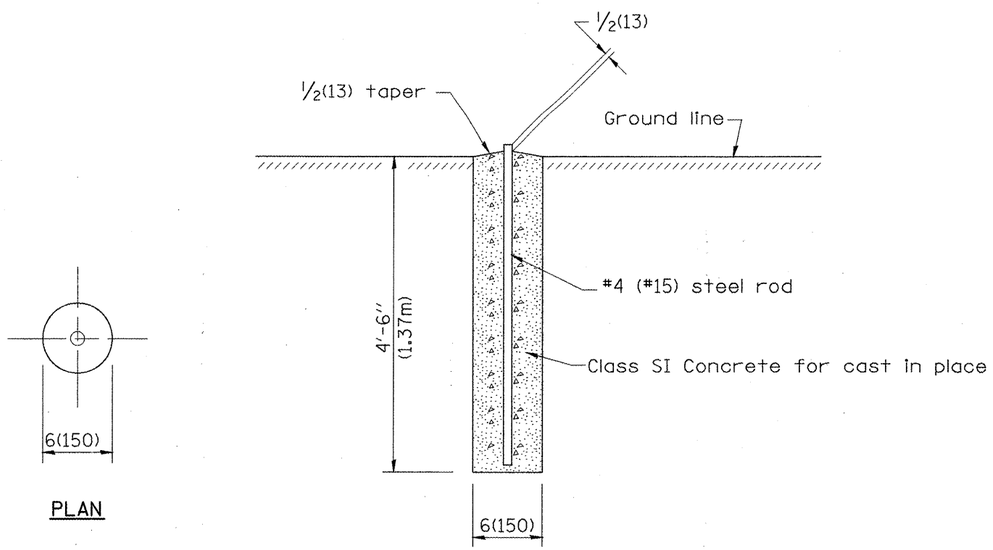

PLAN

SECTION

PERMANENT SURVEY MARKERS

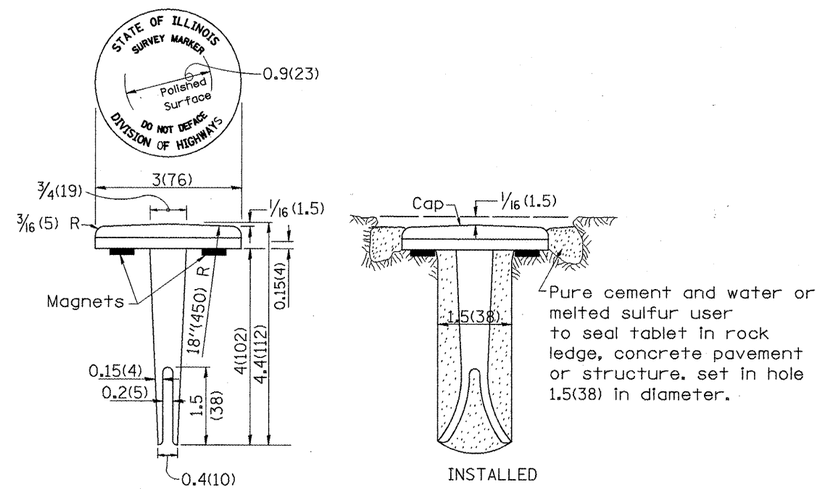

BRONZE TABLET - No Scale
TYPE I

GENERAL NOTES

1. All type II markers shall be cast in place, and precast markers will not be allowed.
2. Two permanent magnets, each having a diameter of 3/4 (19) and a thickness of 1/4 (6), or equivalent, shall beattached to the underside of the tablet with an approved epoxy bonding agent.
3. The location of the markers shall be in accordance with the plans in general, the markers will be placed at the P.T.'s and P.C.'s of horizontal curves and spaces along the tangents in a way that a minimum of two markers are alway inter-visible, and not to exceed 1000' (300m).
4. The markers shall be placed under the direction of the Engineer and shall be installed in a workmanlike manner in order that there will be no further settlement or horizontal shifting. The monuments shall be placed in a way that the survey point will fall within the portion of the plaque provided for that purpose.
5. The project designation, the centerline station, the survey point, and the elevation shall be permanently marked by the use of metal dies after marker has been installed.

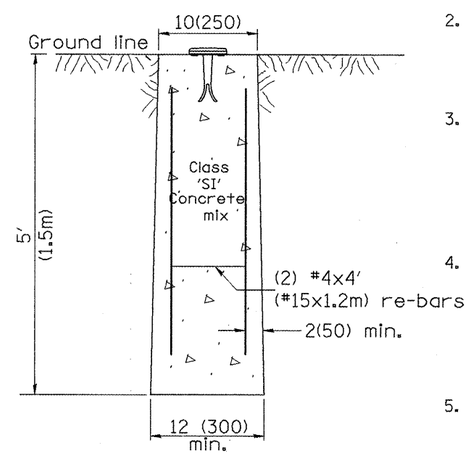

MARKER CAST IN PLACE
TYPE II

All dimensions are in inches (millimeters) unless otherwise noted.

01-01-97	RENUM. D-3.01, NEW REVISION BOX, REVISED	T.P.	10-16-06	REVISED TO 2007 SPEC.	M.A.
	TITLE BOX, ADD DESIGNER NOTE				
07-07-98	ADD DESIGNER NOTE	J.A.			
05-24-06	REMOVED GEN. NOTE UNDER TIES	M.A.			

STATE OF ILLINOIS
DEPARTMENT OF TRANSPORTATION

PERMANENT SURVEY TIE &
PERMANENT SURVEY MARKERS TY.I - TY.II

NOT TO SCALE

CADD STD. 667101-D4

F.A.P RTE.	SECTION	COUNTY	TOTAL SHEETS	SHEET NO.
317	16W-2,RS-4;17W-1,RS-3	FULTON	240	146
		CONTRACT NO. 88703		

FED. ROAD DIST. NO. | ILLINOIS | FED. AID PROJECT

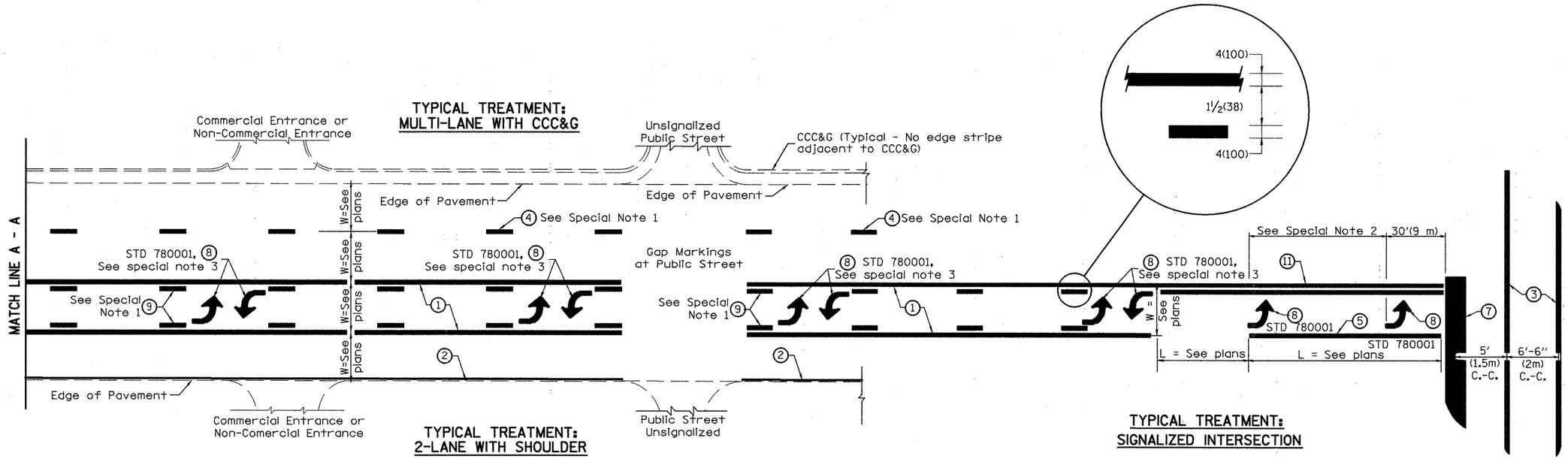

FLUSH PAVED MEDIAN: TWO-WAY LEFT TURN LANE WITH ONE-WAY LEFT TURN LANE AT SIGNALIZED INTERSECTION

TYPICAL PAVEMENT MARKING LEGEND

(Note: This is a District Standard Legend. Some elements may not apply to specific project.)

1. 4(100) Solid (Yellow)
2. 4(100) Solid (White)
3. 2-6(150) Crosswalk @ 6'-6" (2m)min C.-C. (White)
   2-8(200) Crosswalk @ 6'-6" (2m)min C.-C. (White) (When traffic signals are present.)
4. 6(150) Skip-Dash (White) — 10' (3.05m) / 30' (9.14m) / 10' (3.05m) (See Special Note 1)
5. 8(200) Solid (White)
6. 12(300) Diagonal (White) (Item 6 is shown on Std. 780001)
7. 24(600) Stop Bar (White)
8. Letters & Arrows — 33' (10m) (See Std. 780001 and Special Notes 2 & 3)
9. 4(100) Skip-Dash (Yellow) — 10' (3.05m) / 30' (9.14m) / 10' (3.05m) (See Special Note 1)
10. 12(300) Diagonal (Yellow) (See Table A)
11. 4(100) Double Solid (Yellow)

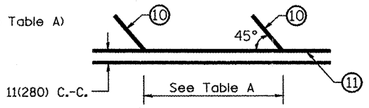

SPECIAL NOTES

1. Skip-Dash markings will be centered between both ends of city blocks and shall be placed in alignment transversly across the pavement.
2. The following shall apply to arrows located in one-way left turn lanes:
   A. A minimum of two (2) arrows is required.
   B. The maximum spacing between arrows is 80' (24 m).
   C. Arrows shall be evenly spaced if three (3) or more are required.
3. The following shall apply to arrow pairs located in two-way left turn lanes:
   A. A minimum of two (2) arrow pairs is required.
   B. The maximum spacing between arrow pairs is 200' (61 m).
   C. Arrow pairs shall be evenly spaced if three (3) or more are required.
   D. The spacing between Bi Directional Left Turn Arrows is 33' (10 m).

GENERAL NOTES

1. Refer to State Standard 780001 for additional Pavement Markings including letters & arrows.
2. See Plans for Pavement Markings adjacent to curbed islands and medians, and through lane reductions.

01-01-97	RENUM. F-8.03, NEW REVISION BOX	T.P.	10-16-06	REVISED TO 2007 SPEC.	
02-07-97	ADD BI DIRECTIONAL DIMENSION	J.A.			
10-97	CORRECT BI DIRECTIONAL DIMENSION	J.A.			
08-02	ADD CROSSWALK DMNS. WITH T.S.	M.A.			

STATE OF ILLINOIS
DEPARTMENT OF TRANSPORTATION

TYPICAL PAVEMENT MARKINGS

NOT TO SCALE

SHT. 1 OF 2
CADD STD. 780001-D4

F.A.P RTE.	SECTION	COUNTY	TOTAL SHEETS	SHEET NO.
317	16W-2,RS-4;17W-1,RS-3	FULTON	240	147
		CONTRACT NO. 88703		
FED. ROAD DIST. NO.	ILLINOIS	FED. AID PROJECT		

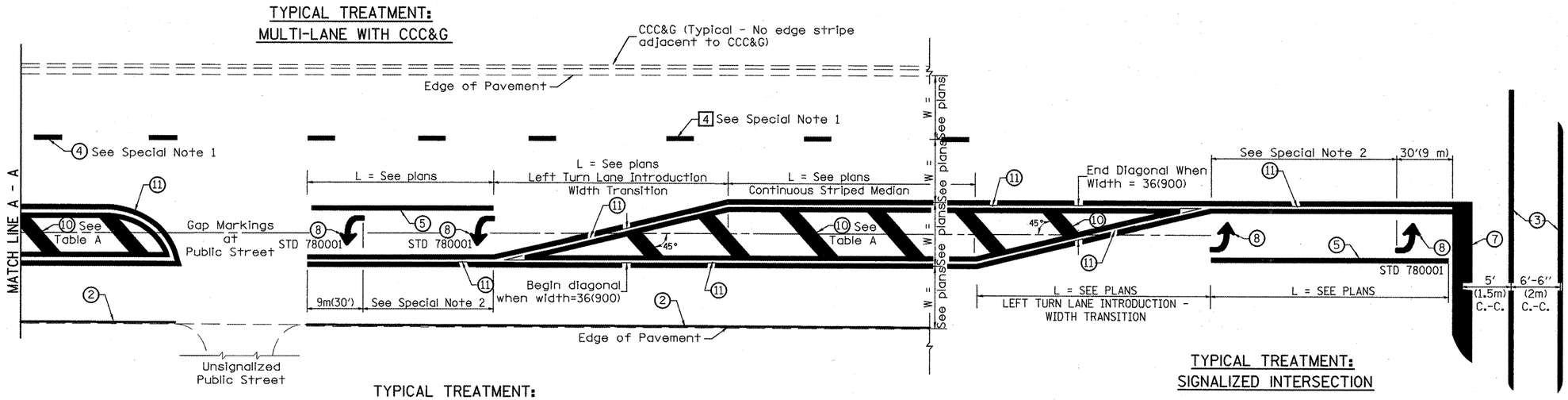

FLUSH PAVED MEDIAN: RESTRICTED LEFT TURN LANE

TABLE A

RECOMMENDED SPACING BETWEEN DIAGONAL LINES

SPEED LIMIT RANGE	CONTINUOUS	INTERSECTION CHANNELIZATION (Includes Width Transitions for Median and Left Turn Lane Introductions)
Less Than 30 mph (50 km/h)	50' (15m)	15' (5m)
30 - 45 mph (50 - 70 km/h)	75' (23m)	20' (6m)
Over 45 mph (70 km/h)	150' (46m)	30' (9m)

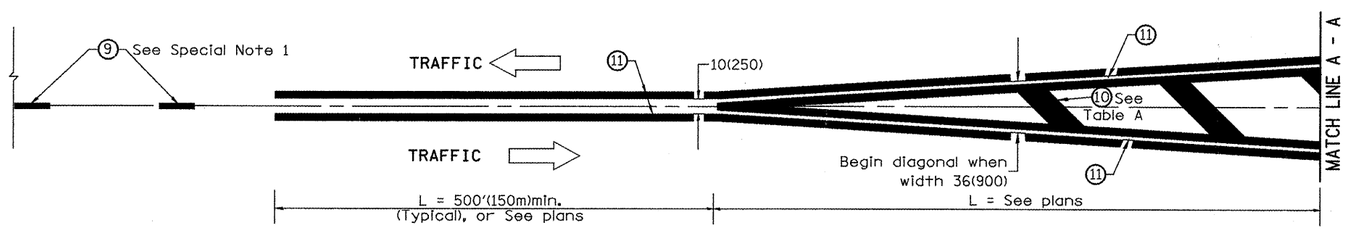

MEDIAN INTRODUCTION - WIDTH TRANSITIONS

All dimensions are in inches (millimeters) unless otherwise noted.

STATE OF ILLINOIS
DEPARTMENT OF TRANSPORTATION

TYPICAL PAVEMENT MARKINGS

NOT TO SCALE

SHT. 2 OF 2
CADD STD. 780001-D4

F.A.P RTE.	SECTION	COUNTY	TOTAL SHEETS	SHEET NO.
317	16W-2,RS-4;17W-1,RS-3	FULTON	240	148
		CONTRACT NO. 88703		
FED. ROAD DIST. NO.	ILLINOIS	FED. AID PROJECT		

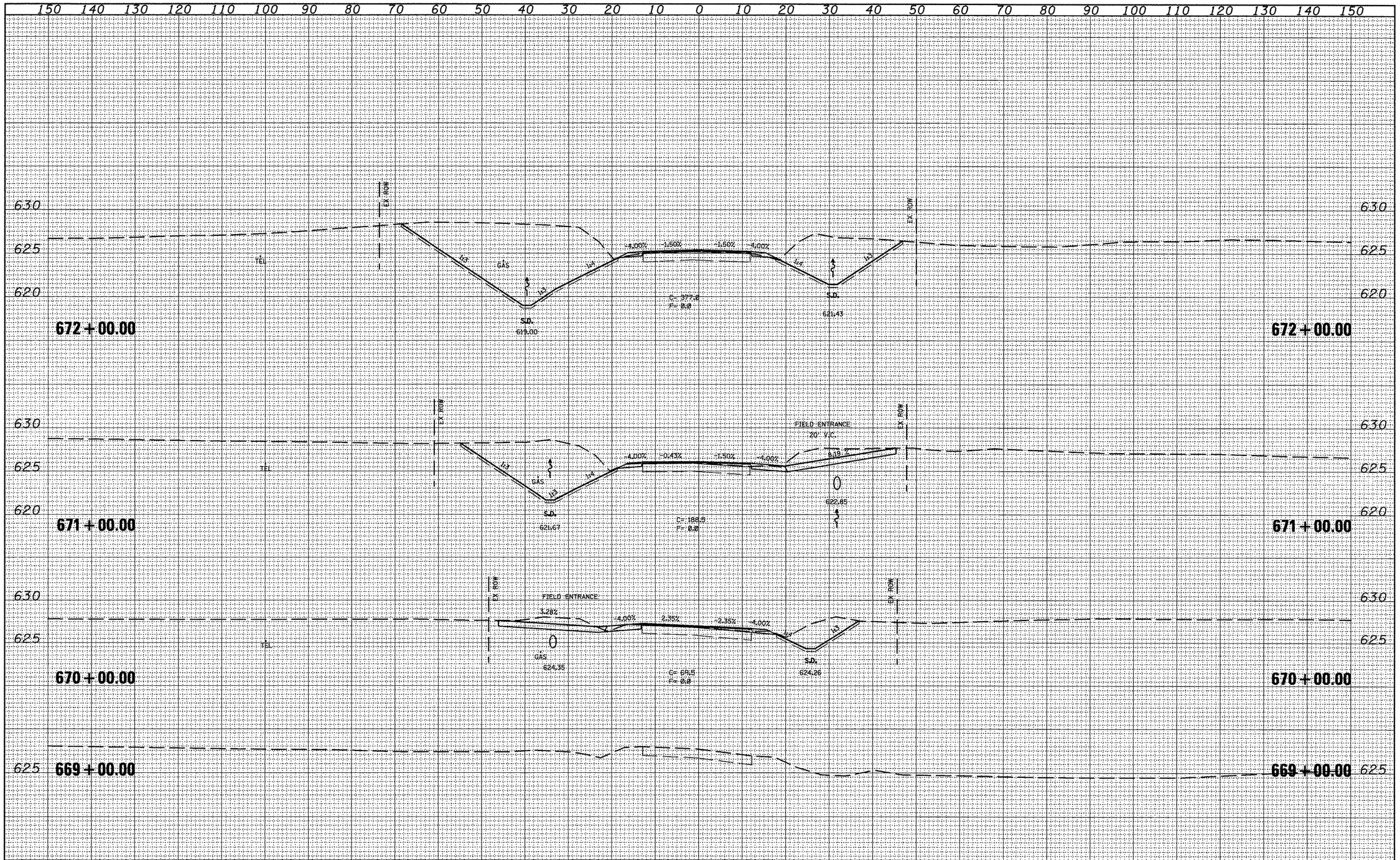

FINAL SURVEY		DATE
SURVEYED		
PLOTTED		
TEMPLATE		
AREAS		
AREAS CHECKED		
NOTE BOOK		BY
NO.		

ORIGINAL SURVEY		DATE
SURVEYED		
PLOTTED		
TEMPLATE		
AREAS		
AREAS CHECKED		
NOTE BOOK		BY
NO.		

FILE NAME = xsec_sheet.dgn	USER NAME = jochumsjg	DESIGNED -	REVISED -
		DRAWN -	REVISED -
	PLOT SCALE = 20.0000 ' / IN.	CHECKED -	REVISED -
	PLOT DATE = 3/11/2010	DATE -	REVISED -

STATE OF ILLINOIS
DEPARTMENT OF TRANSPORTATION

CROSS SECTIONS

SCALE: | SHEET NO. OF SHEETS | STA. 669+00.00 TO STA. 672+00.00

F.A.P. RTE.	SECTION	COUNTY	TOTAL SHEETS	SHEET NO.
317	16W-2,RS-4;17W-1,RS-3	FULTON	240	149

CONTRACT NO. 88703

ILLINOIS FED. AID PROJECT

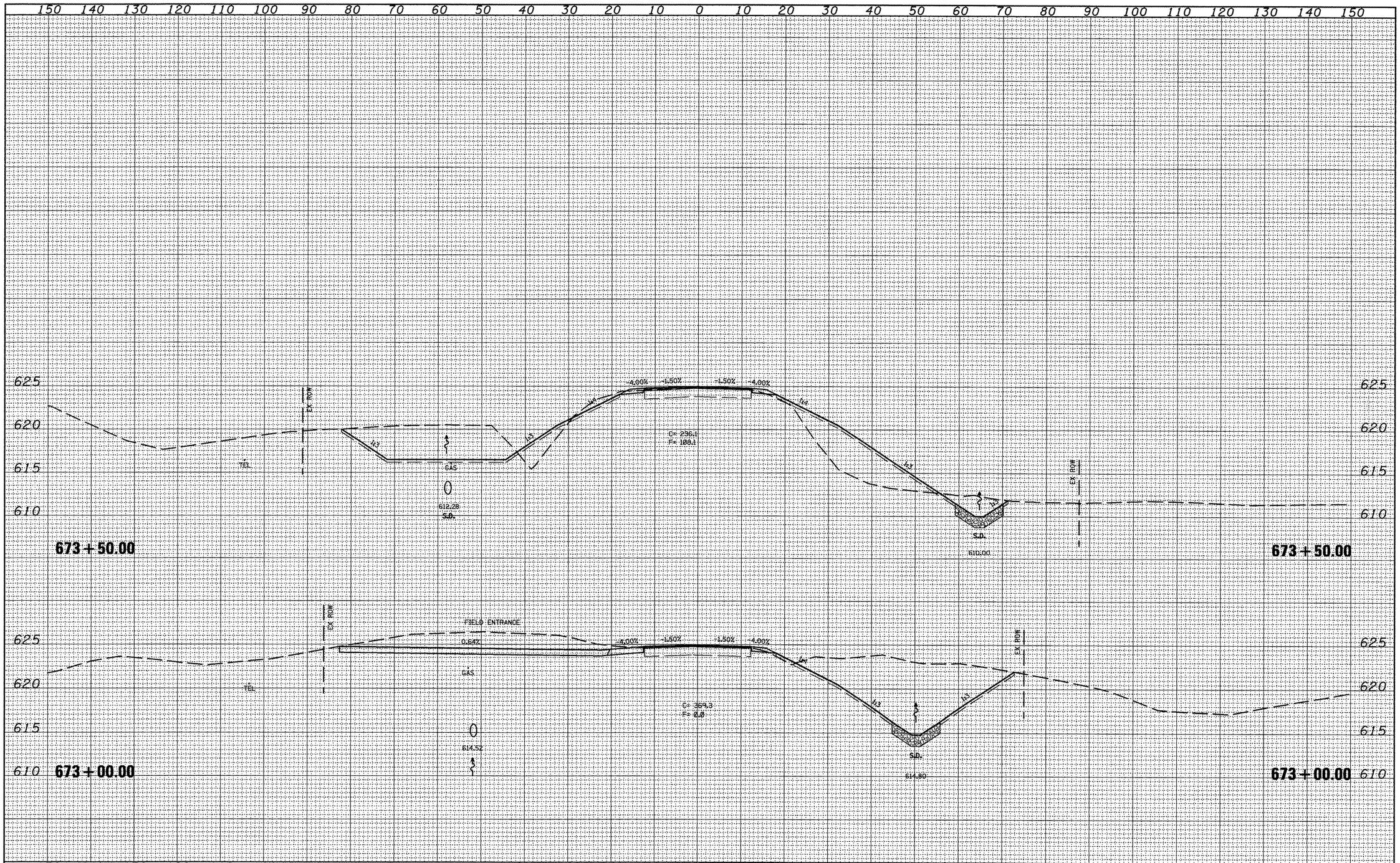

FILE NAME = xsec_sheet.dgn	USER NAME = jochums.jg	DESIGNED -	REVISED -
		DRAWN -	REVISED -
	PLOT SCALE = 20.0000 ' / IN.	CHECKED -	REVISED -
	PLOT DATE = 3/11/2010	DATE -	REVISED -

STATE OF ILLINOIS
DEPARTMENT OF TRANSPORTATION

CROSS SECTIONS

SCALE: | SHEET NO. OF SHEETS | STA. 673+00.00 TO STA. 673+50.00

F.AEAP RTE.	SECTION	COUNTY	TOTAL SHEETS	SHEET NO.
317	16W-2,RS-4;17W-1,RS-3	FULTON	240	150

CONTRACT NO. 88703

ILLINOIS FED. AID PROJECT

FINAL SURVEY		BY	DATE
NOTE BOOK	SURVEYED		
	PLOTTED		
	TEMPLATE		
NO.	AREAS		
	AREAS CHECKED		

ORIGINAL SURVEY		BY	DATE
NOTE BOOK	SURVEYED		
	PLOTTED		
	TEMPLATE		
NO.	AREAS		
	AREAS CHECKED		

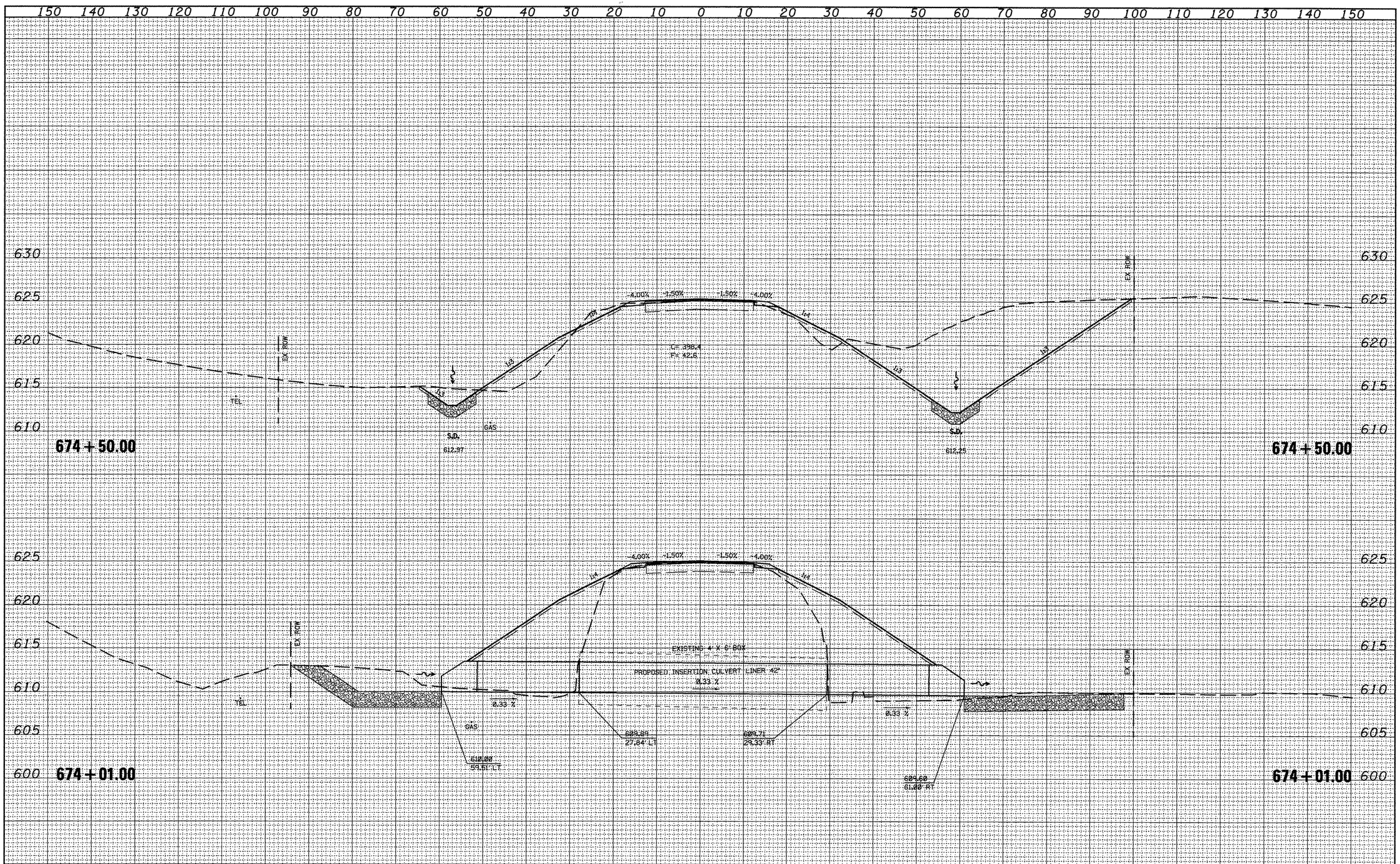

FILE NAME = xsec_sheet.dgn	USER NAME = jochumsjg	DESIGNED -	REVISED -
		DRAWN -	REVISED -
	PLOT SCALE = 20.0000 ' / IN.	CHECKED -	REVISED -
	PLOT DATE = 3/11/2010	DATE -	REVISED -

STATE OF ILLINOIS
DEPARTMENT OF TRANSPORTATION

CROSS SECTIONS

SCALE: | SHEET NO. OF SHEETS | STA. 674+01.00 TO STA. 674+50.00

F.A.P. RTE.	SECTION	COUNTY	TOTAL SHEETS	SHEET NO.
317	16W-2,RS-4;17W-1,RS-3	FULTON	240	151

CONTRACT NO. 88703

ILLINOIS FED. AID PROJECT

FINAL SURVEY		BY	DATE
	SURVEYED		
	PLOTTED		
	TEMPLATE		
NOTE BOOK	AREAS		
	AREAS CHECKED		
NO.			

ORIGINAL SURVEY		BY	DATE
	SURVEYED		
	PLOTTED		
	TEMPLATE		
NOTE BOOK	AREAS		
	AREAS CHECKED		
NO.			

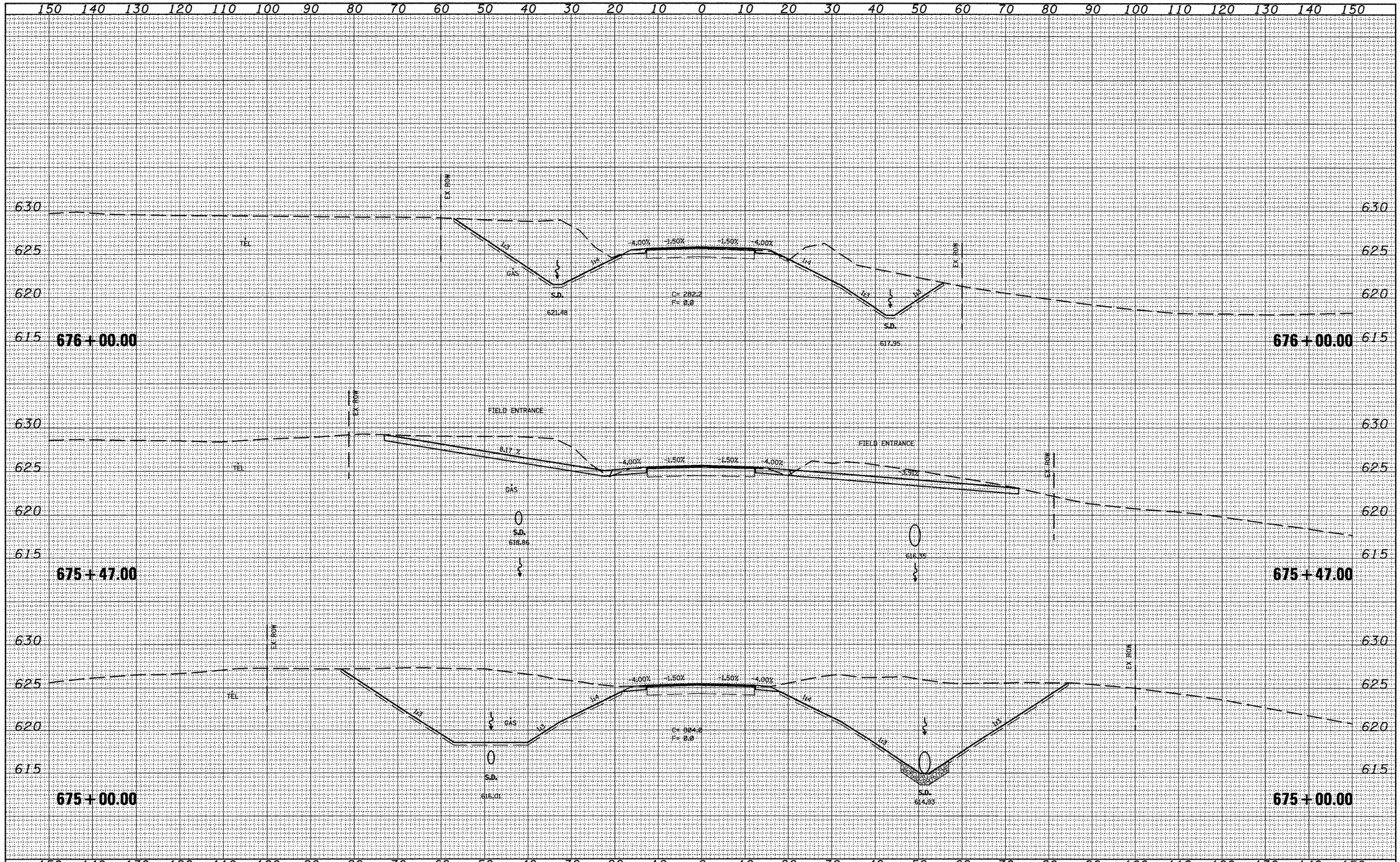

FILE NAME = xsec_sheet.dgn	USER NAME = jochums,jg	DESIGNED -	REVISED -
		DRAWN -	REVISED -
	PLOT SCALE = 20.0000 ' / IN.	CHECKED -	REVISED -
	PLOT DATE = 3/11/2010	DATE -	REVISED -

STATE OF ILLINOIS
DEPARTMENT OF TRANSPORTATION

CROSS SECTIONS

SCALE: | SHEET NO. OF SHEETS | STA. 675+00.00 TO STA. 676+00.00

F.AP RTE.	SECTION	COUNTY	TOTAL SHEETS	SHEET NO.
317	16W-2,RS-4;17W-1,RS-3	FULTON	240	152

CONTRACT NO. 88703

ILLINOIS FED. AID PROJECT

FINAL SURVEY		BY	DATE
	SURVEYED		
	PLOTTED		
NOTE BOOK	TEMPLATE		
	AREAS		
NO.	AREAS CHECKED		

ORIGINAL SURVEY		BY	DATE
	SURVEYED		
	PLOTTED		
NOTE BOOK	TEMPLATE		
	AREAS		
NO.	AREAS CHECKED		

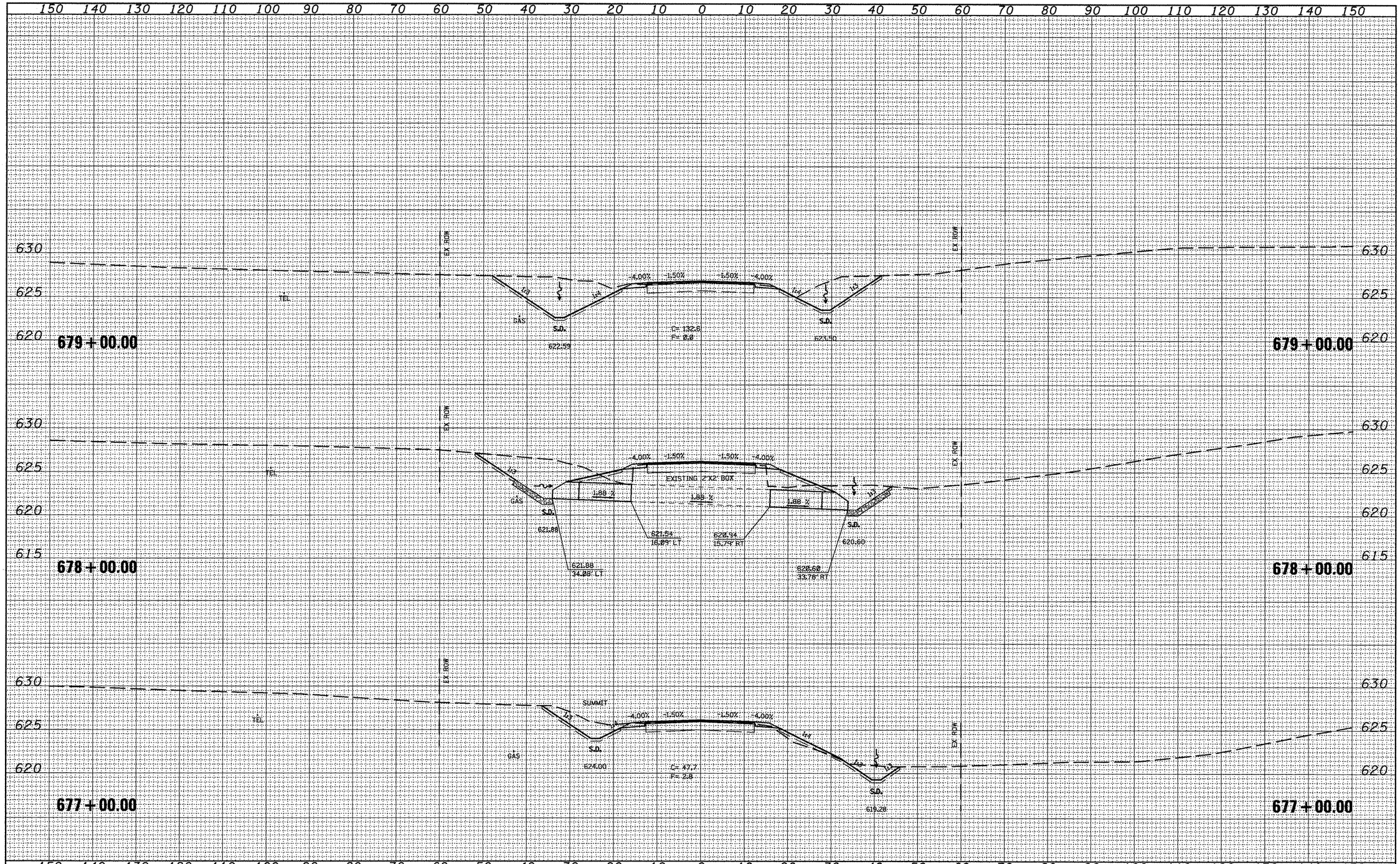

FILE NAME = xsec_sheet.dgn	USER NAME = jochumsjg	DESIGNED -	REVISED -
		DRAWN -	REVISED -
	PLOT SCALE = 20.0000 ' / IN.	CHECKED -	REVISED -
	PLOT DATE = 3/11/2010	DATE -	REVISED -

STATE OF ILLINOIS
DEPARTMENT OF TRANSPORTATION

CROSS SECTIONS

SCALE: | SHEET NO. OF SHEETS | STA. 677+00.00 TO STA. 679+00.00

F.A.P. RTE.	SECTION	COUNTY	TOTAL SHEETS	SHEET NO.
317	16W-2,RS-4;17W-1,RS-3	FULTON	240	153

CONTRACT NO. 88703

ILLINOIS FED. AID PROJECT

ORIGINAL SURVEY		DATE
NOTE BOOK	SURVEYED	
	PLOTTED	
	TEMPLATE	
	AREAS	
NO.	AREAS CHECKED	

FINAL SURVEY		DATE
NOTE BOOK	SURVEYED	
	PLOTTED	
	TEMPLATE	
	AREAS	
NO.	AREAS CHECKED	

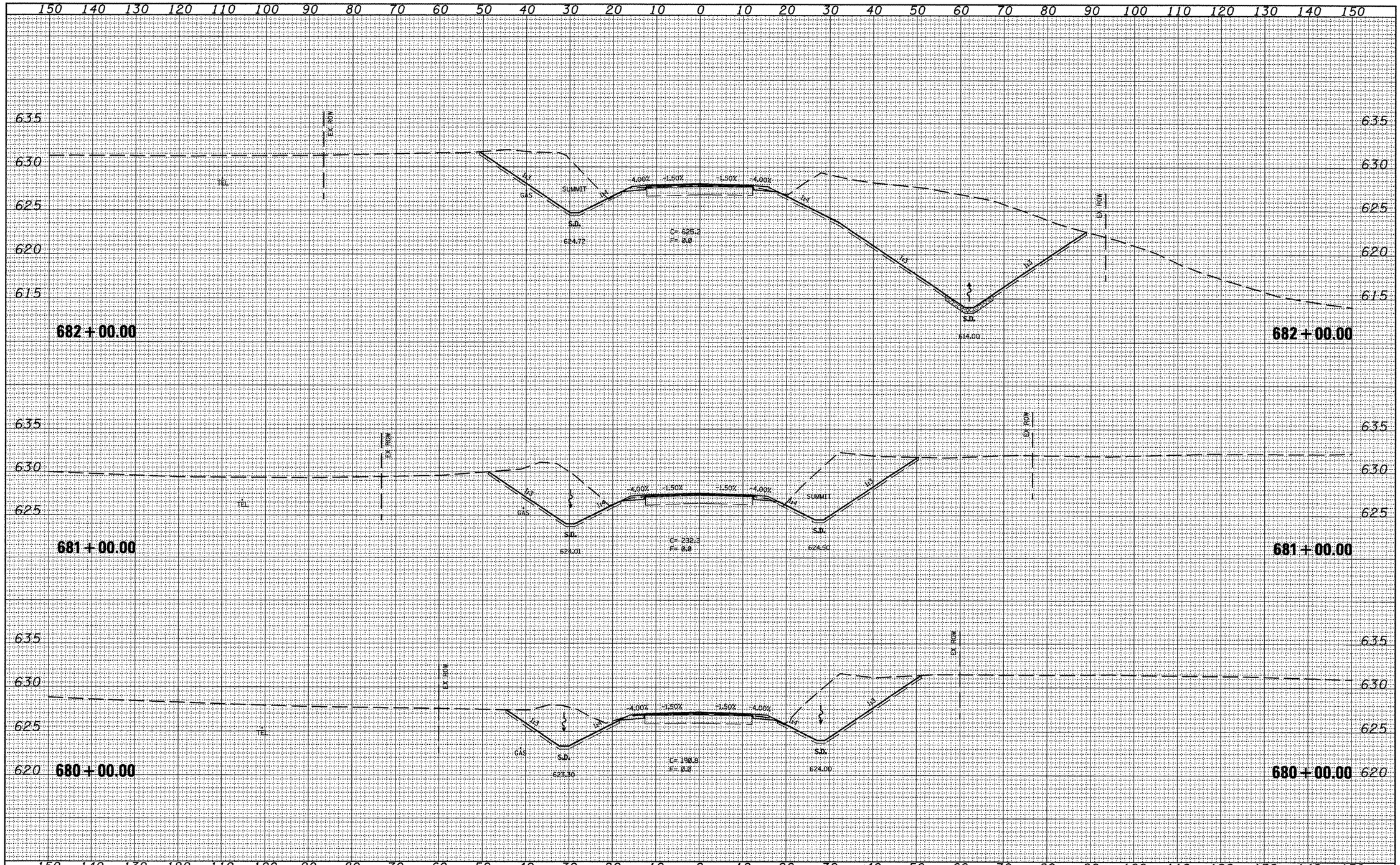

FINAL SURVEY		BY	DATE
	SURVEYED		
	PLOTTED		
	TEMPLATE		
NOTE BOOK	AREAS		
NO.	AREAS CHECKED		

ORIGINAL SURVEY		BY	DATE
	SURVEYED		
	PLOTTED		
	TEMPLATE		
NOTE BOOK	AREAS		
NO.	AREAS CHECKED		

FILE NAME = xsec_sheet.dgn	USER NAME = jochumsjg	DESIGNED -	REVISED -
		DRAWN -	REVISED -
	PLOT SCALE = 20.0000 ' / IN.	CHECKED -	REVISED -
	PLOT DATE = 3/11/2010	DATE -	REVISED -

STATE OF ILLINOIS
DEPARTMENT OF TRANSPORTATION

CROSS SECTIONS

SCALE: | SHEET NO. OF SHEETS | STA. 680+00.00 TO STA. 682+00.00

F.A.P. RTE.	SECTION	COUNTY	TOTAL SHEETS	SHEET NO.
317	16W-2,RS-4;17W-1,RS-3	FULTON	240	154

CONTRACT NO. 88703

ILLINOIS FED. AID PROJECT

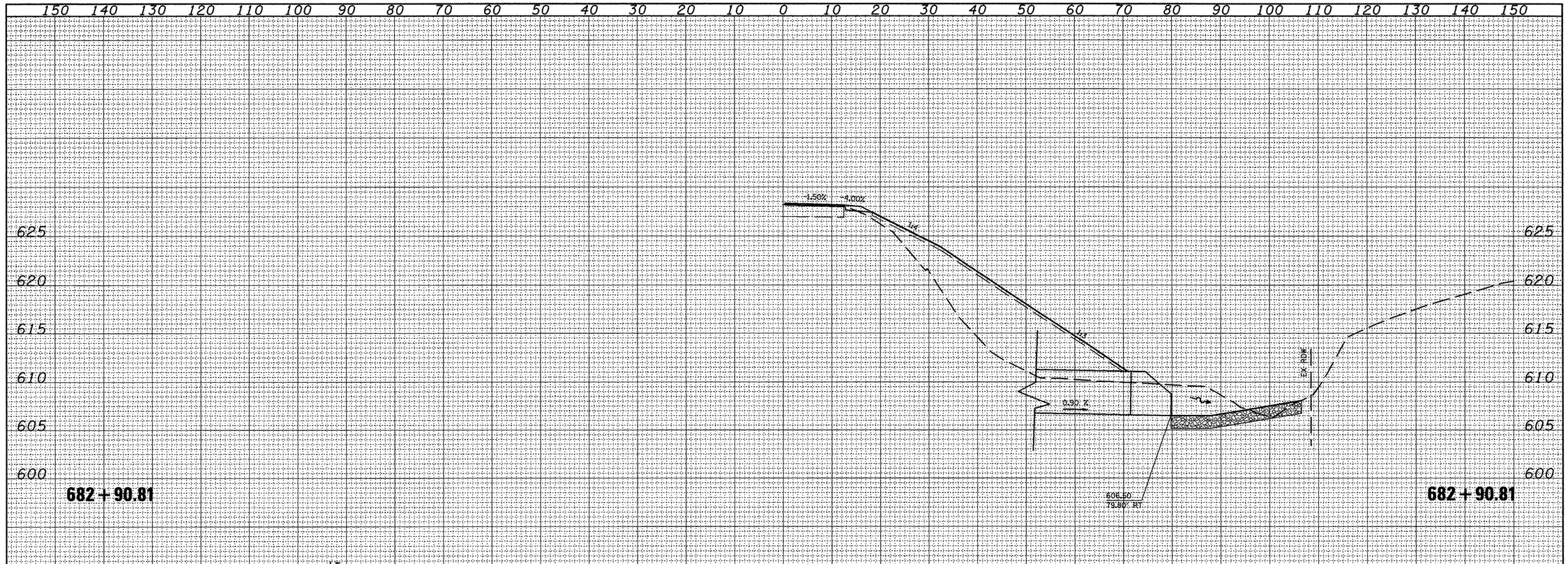

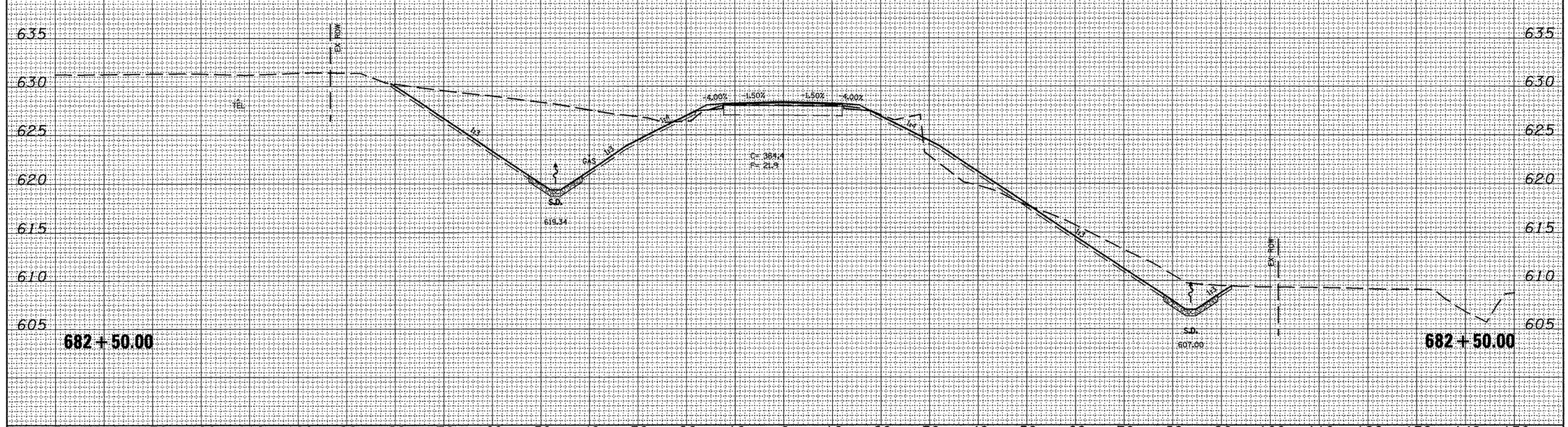

FILE NAME = xsec_sheet.dgn	USER NAME = jochums,jg	DESIGNED -	REVISED -
		DRAWN -	REVISED -
	PLOT SCALE = 20.0000 ' / IN.	CHECKED -	REVISED -
	PLOT DATE = 3/11/2010	DATE -	REVISED -

STATE OF ILLINOIS
DEPARTMENT OF TRANSPORTATION

CROSS SECTIONS

SCALE: | SHEET NO. OF SHEETS | STA. 682+50.00 TO STA. 682+90.81

F.A.P. RTE.	SECTION	COUNTY	TOTAL SHEETS	SHEET NO.
317	16W-2,RS-4;17W-1,RS-3	FULTON	240	155

CONTRACT NO. 88703

ILLINOIS FED. AID PROJECT

FINAL SURVEY: NOTE BOOK NO. | SURVEYED | PLOTTED | TEMPLATE | AREAS | AREAS CHECKED | BY | DATE

ORIGINAL SURVEY: NOTE BOOK NO. | SURVEYED | PLOTTED | TEMPLATE | AREAS | AREAS CHECKED | BY | DATE

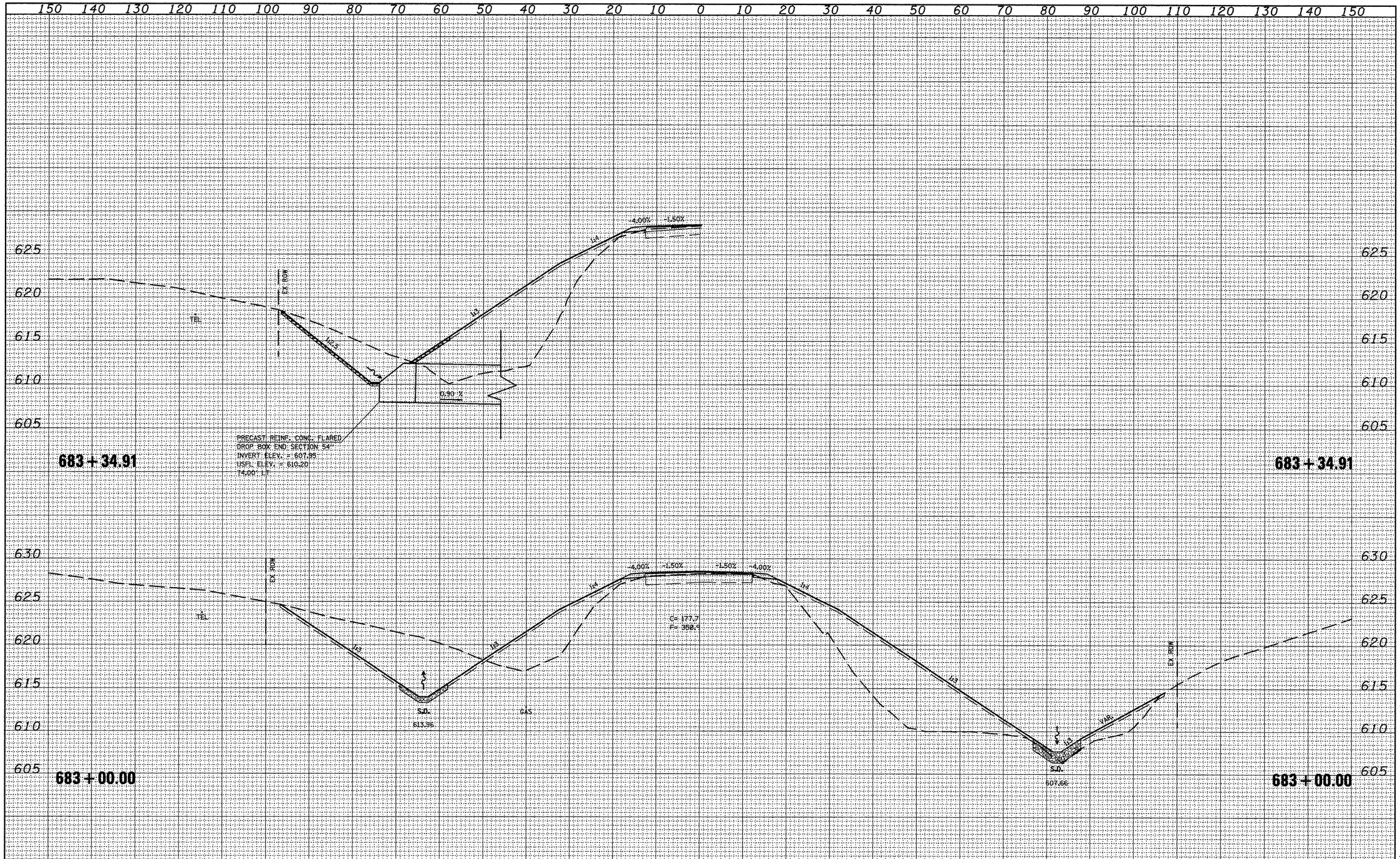

FINAL SURVEY		BY	DATE
NOTE BOOK	SURVEYED		
	PLOTTED		
	TEMPLATE		
NO.	AREAS		
	AREAS CHECKED		

ORIGINAL SURVEY		BY	DATE
NOTE BOOK	SURVEYED		
	PLOTTED		
	TEMPLATE		
NO.	AREAS		
	AREAS CHECKED		

FILE NAME = xsec_sheet.dgn	USER NAME = jochums.jg	DESIGNED -	REVISED -
		DRAWN -	REVISED -
	PLOT SCALE = 20.0000 ' / IN.	CHECKED -	REVISED -
	PLOT DATE = 3/11/2010	DATE -	REVISED -

STATE OF ILLINOIS
DEPARTMENT OF TRANSPORTATION

CROSS SECTIONS

SCALE: | SHEET NO. OF SHEETS | STA. 683+00.00 TO STA. 683+34.91

F.A.P. RTE.	SECTION	COUNTY	TOTAL SHEETS	SHEET NO.
317	16W-2,RS-4;17W-1,RS-3	FULTON	240	156

CONTRACT NO. 88703

ILLINOIS FED. AID PROJECT

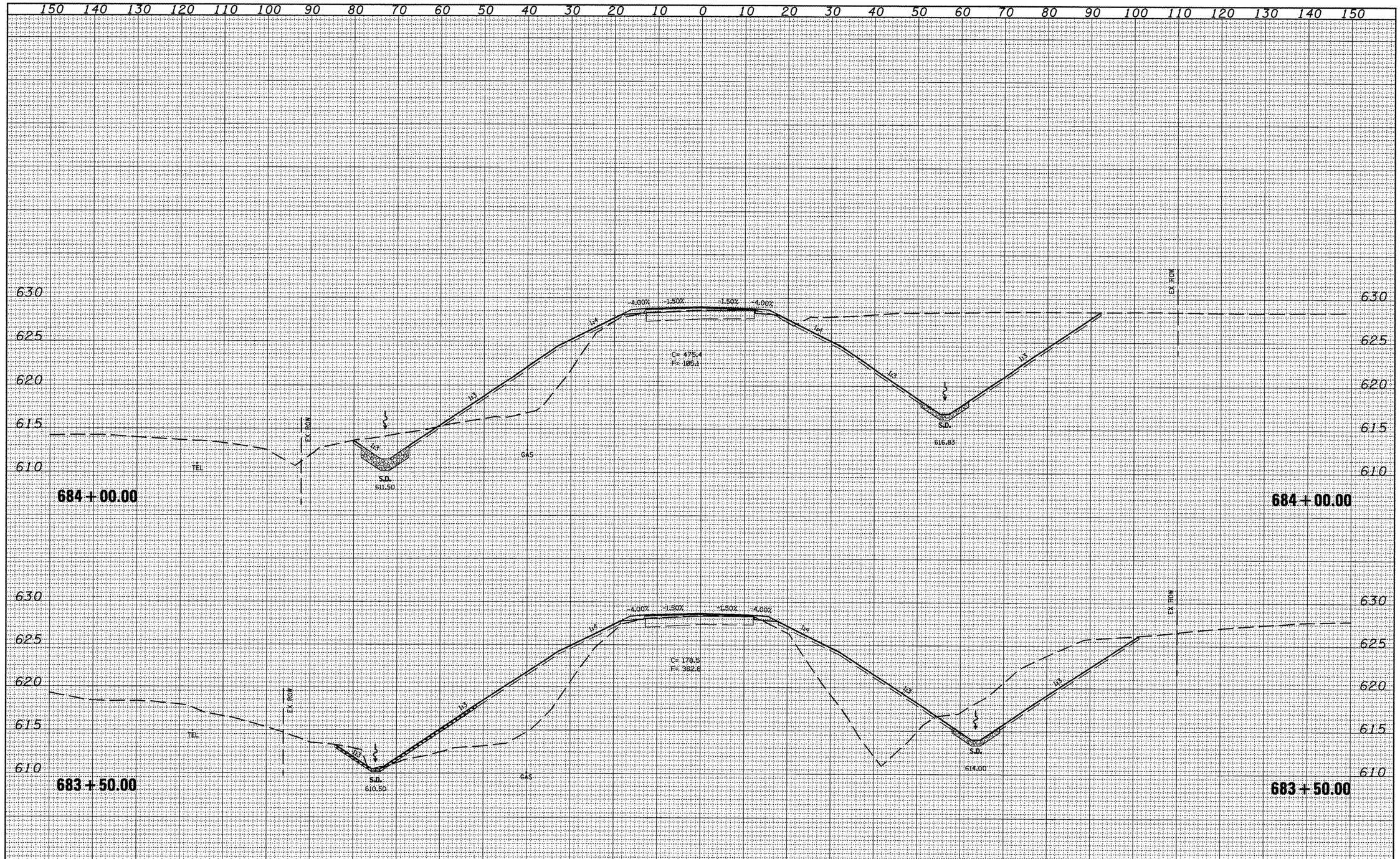

FILE NAME = xsec_sheet.dgn	USER NAME = jochums,jg	DESIGNED -	REVISED -
		DRAWN -	REVISED -
	PLOT SCALE = 20.0000 ' / IN.	CHECKED -	REVISED -
	PLOT DATE = 3/11/2010	DATE -	REVISED -

STATE OF ILLINOIS
DEPARTMENT OF TRANSPORTATION

CROSS SECTIONS

SCALE: | SHEET NO. OF SHEETS | STA. 683+50.00 TO STA. 684+00.00

F.A.P. RTE.	SECTION	COUNTY	TOTAL SHEETS	SHEET NO.
317	16W-2,RS-4;17W-1,RS-3	FULTON	240	157
		CONTRACT NO. 88703		
		ILLINOIS FED. AID PROJECT		

FINAL SURVEY: SURVEYED, PLOTTED, TEMPLATE, AREAS, AREAS CHECKED — NOTE BOOK NO. — BY — DATE

ORIGINAL SURVEY: SURVEYED, PLOTTED, TEMPLATE, AREAS, AREAS CHECKED — NOTE BOOK NO. — BY — DATE

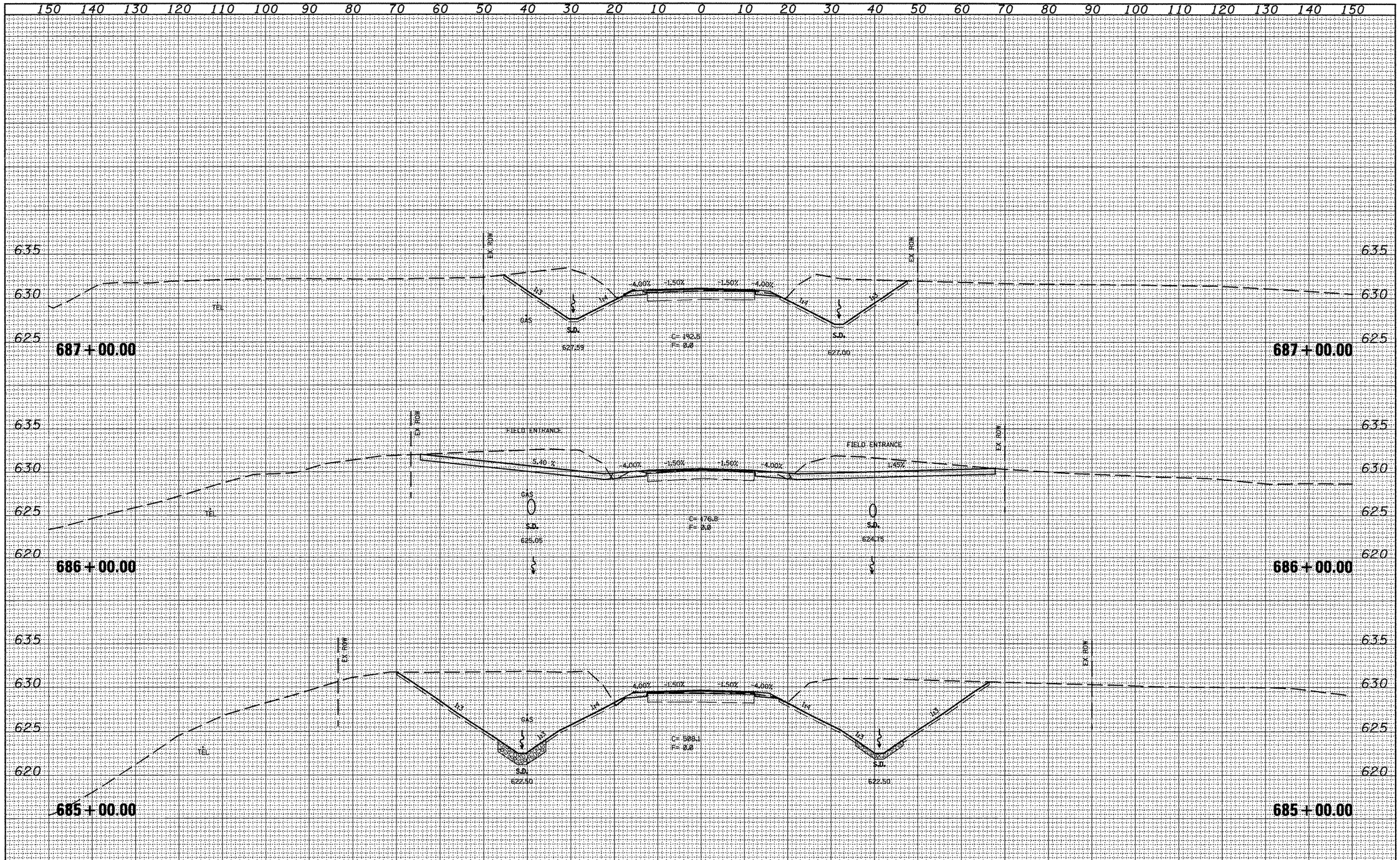

FILE NAME = xsec_sheet.dgn	USER NAME = jochumsjg	DESIGNED -	REVISED -	STATE OF ILLINOIS DEPARTMENT OF TRANSPORTATION	CROSS SECTIONS	F.AEAP. RTE.	SECTION	COUNTY	TOTAL SHEETS	SHEET NO.
		DRAWN -	REVISED -			317	16W-2,RS-4;17W-1,RS-3	FULTON	240	158
	PLOT SCALE = 20.0000 ' / IN.	CHECKED -	REVISED -					CONTRACT NO. 88703		
	PLOT DATE = 3/11/2010	DATE -	REVISED -		SCALE: SHEET NO. OF SHEETS STA. 685+00.00 TO STA. 687+00.00			ILLINOIS FED. AID PROJECT		

FINAL SURVEY		BY	DATE
	SURVEYED		
	PLOTTED		
NOTE BOOK	TEMPLATE		
	AREAS		
NO.	AREAS CHECKED		

ORIGINAL SURVEY		BY	DATE
	SURVEYED		
	PLOTTED		
NOTE BOOK	TEMPLATE		
	AREAS		
NO.	AREAS CHECKED		

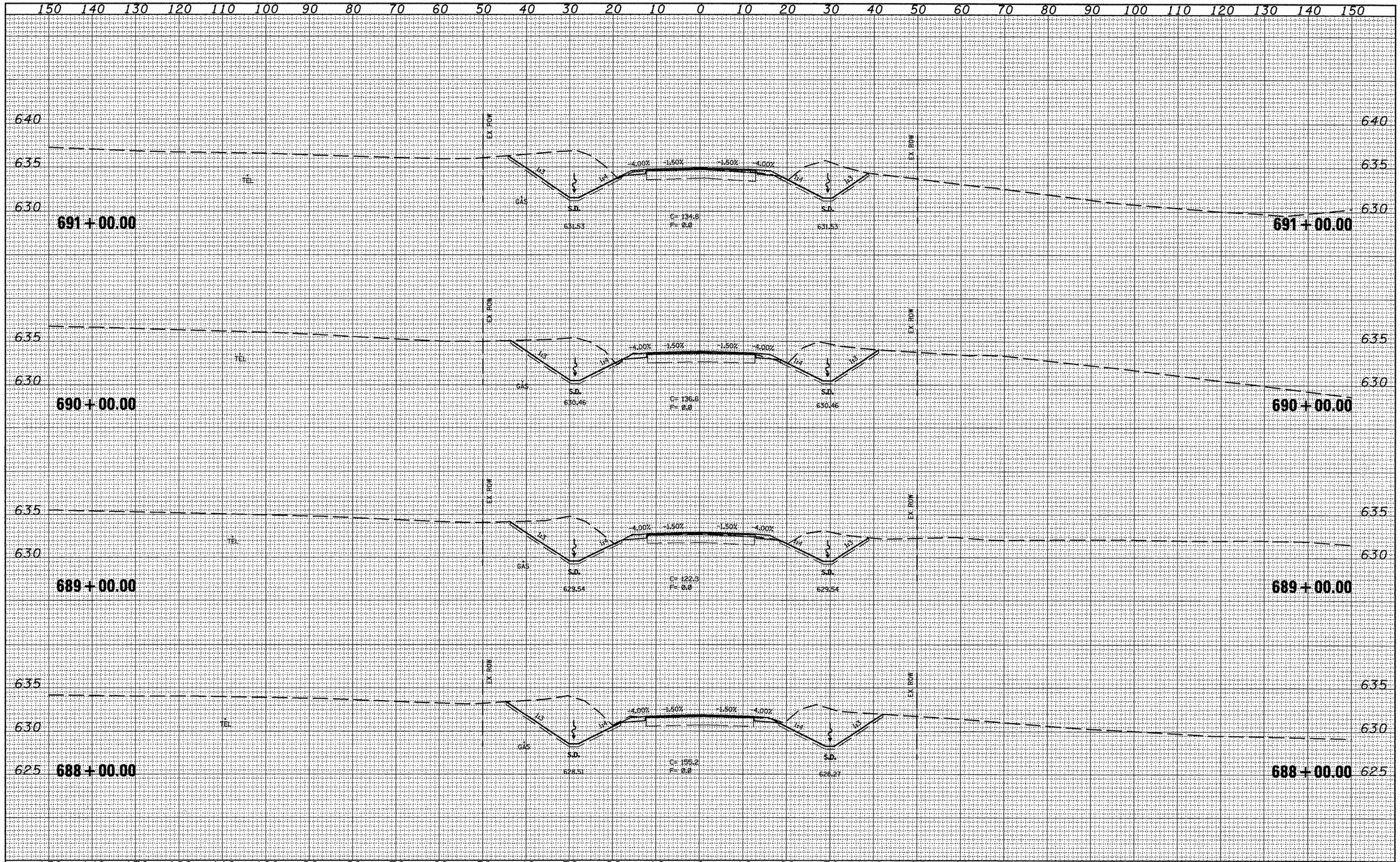

FILE NAME = xsec_sheet.dgn	USER NAME = jochumsjg	DESIGNED -	REVISED -
		DRAWN -	REVISED -
	PLOT SCALE = 20.0000 ' / IN.	CHECKED -	REVISED -
	PLOT DATE = 3/11/2010	DATE -	REVISED -

STATE OF ILLINOIS
DEPARTMENT OF TRANSPORTATION

CROSS SECTIONS

SCALE: | SHEET NO. OF SHEETS | STA. 688+00.00 TO STA. 691+00.00

F.A.P. RTE.	SECTION	COUNTY	TOTAL SHEETS	SHEET NO.
317	16W-2,RS-4;17W-1,RS-3	FULTON	240	159

CONTRACT NO. 88703

ILLINOIS | FED. AID PROJECT

FINAL SURVEY	SURVEYED	BY	DATE
	PLOTTED		
NOTE BOOK	TABULATED		
	AREAS		
NO.	AREAS CHECKED		

ORIGINAL SURVEY	SURVEYED	BY	DATE
	PLOTTED		
NOTE BOOK	TABULATED		
	AREAS		
NO.	AREAS CHECKED		

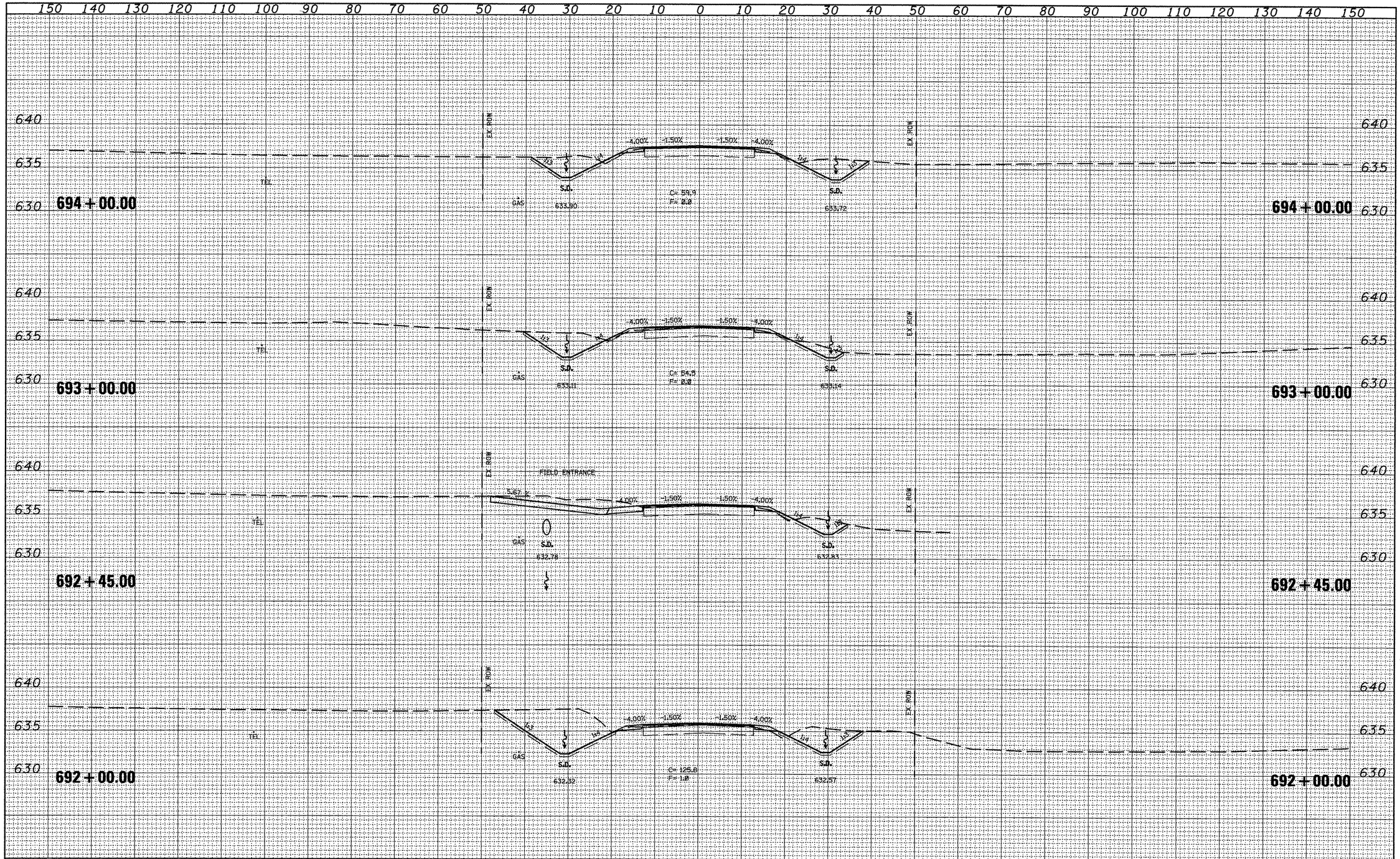

FINAL SURVEY		BY	DATE
NOTE BOOK NO.	SURVEYED		
	PLOTTED		
	TEMPLATE		
	AREAS		
	AREAS CHECKED		

ORIGINAL SURVEY		BY	DATE
NOTE BOOK NO.	SURVEYED		
	PLOTTED		
	TEMPLATE		
	AREAS		
	AREAS CHECKED		

FILE NAME = xsec_sheet.dgn	USER NAME = jochums.jg	DESIGNED -	REVISED -
		DRAWN -	REVISED -
	PLOT SCALE = 20.0000 ' / IN.	CHECKED -	REVISED -
	PLOT DATE = 3/11/2010	DATE -	REVISED -

STATE OF ILLINOIS
DEPARTMENT OF TRANSPORTATION

CROSS SECTIONS

SCALE: | SHEET NO. OF SHEETS | STA. 692+00.00 TO STA. 694+00.00

F.AEAP RTE.	SECTION	COUNTY	TOTAL SHEETS	SHEET NO.
317	16W-2,RS-4;17W-1,RS-3	FULTON	240	160

CONTRACT NO. 88703

ILLINOIS FED. AID PROJECT

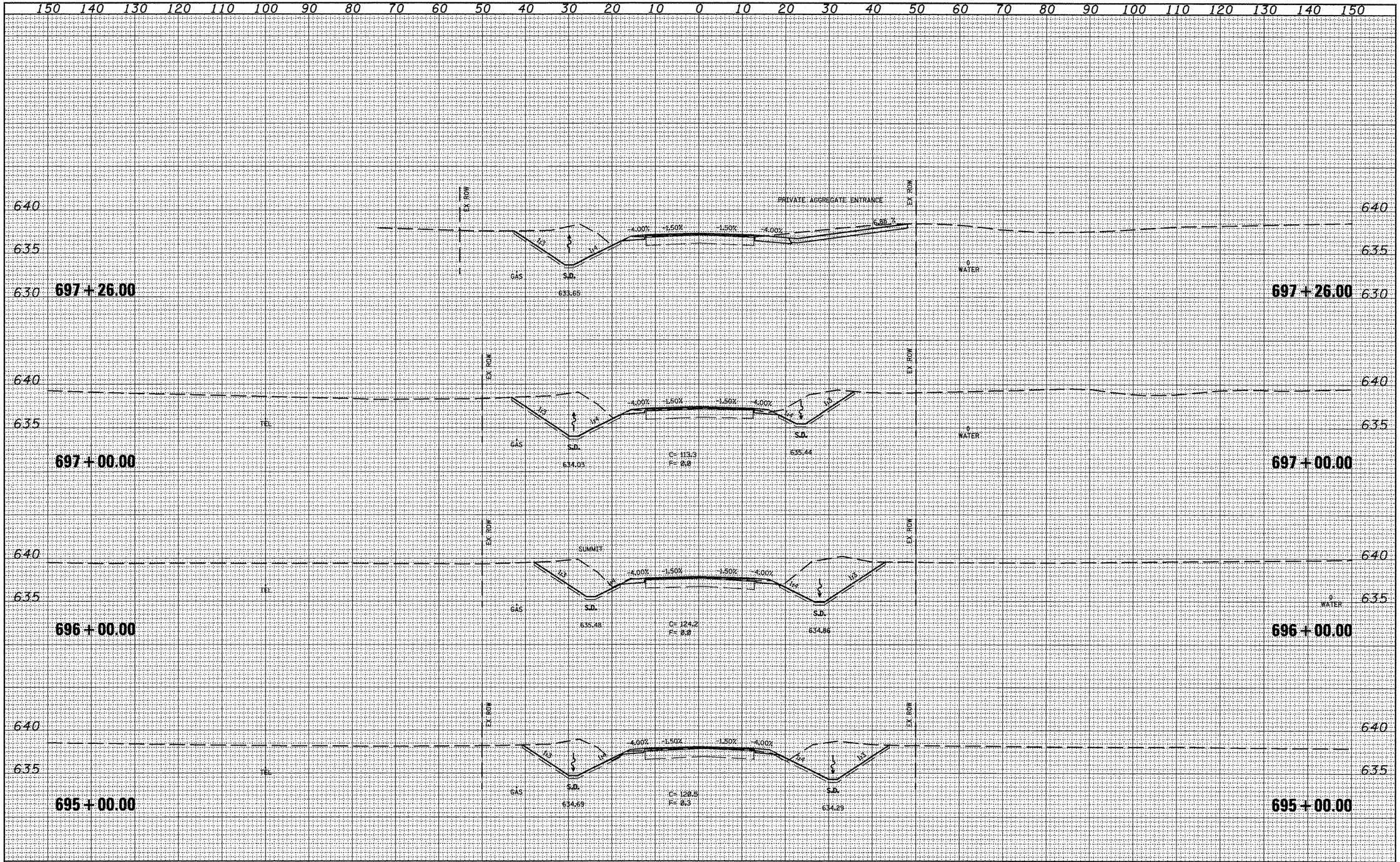

FILE NAME = xsec_sheet.dgn	USER NAME = jochums.jg	DESIGNED -	REVISED -
		DRAWN -	REVISED -
	PLOT SCALE = 20.0000 ' / IN.	CHECKED -	REVISED -
	PLOT DATE = 3/11/2010	DATE -	REVISED -

STATE OF ILLINOIS
DEPARTMENT OF TRANSPORTATION

CROSS SECTIONS

SCALE: | SHEET NO. OF SHEETS | STA. 695+00.00 TO STA. 697+26.00

F.A.P. RTE.	SECTION	COUNTY	TOTAL SHEETS	SHEET NO.
317	16W-2,RS-4;17W-1,RS-3	FULTON	240	161

CONTRACT NO. 88703

ILLINOIS FED. AID PROJECT

FINAL SURVEY	BY	DATE
SURVEYED		
PLOTTED		
TRAVERSE		
AREAS		
AREAS CHECKED		
NOTE BOOK NO.		

ORIGINAL SURVEY	BY	DATE
SURVEYED		
PLOTTED		
TRAVERSE		
AREAS		
AREAS CHECKED		
NOTE BOOK NO.		

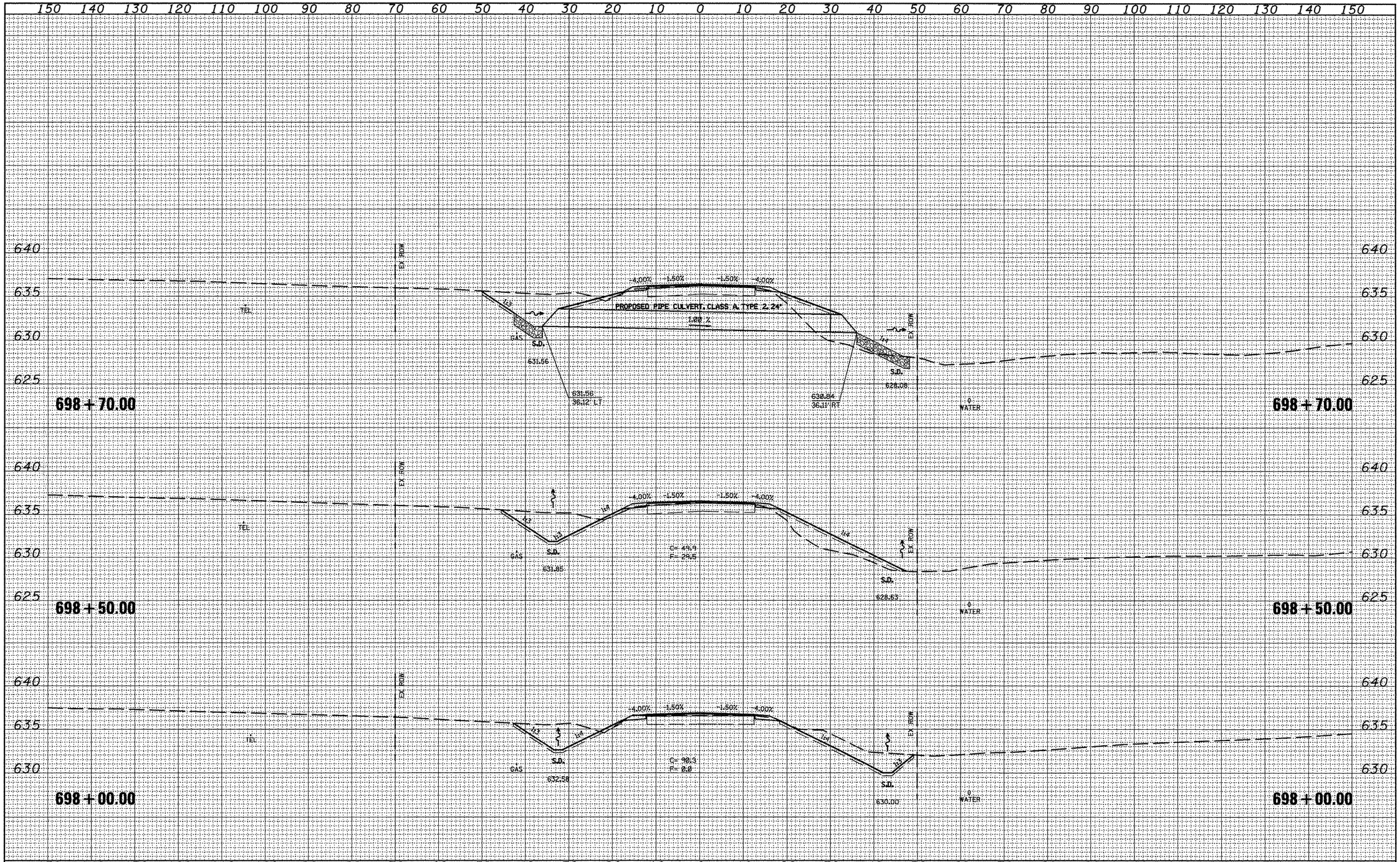

FILE NAME = xsec_sheet.dgn	USER NAME = jochums,jg	DESIGNED -	REVISED -
		DRAWN -	REVISED -
	PLOT SCALE = 20.0000 ' / IN.	CHECKED -	REVISED -
	PLOT DATE = 3/11/2010	DATE -	REVISED -

STATE OF ILLINOIS
DEPARTMENT OF TRANSPORTATION

CROSS SECTIONS

SCALE: | SHEET NO. OF SHEETS | STA. 698+00.00 TO STA. 698+70.00

F.AEAP RTE.	SECTION	COUNTY	TOTAL SHEETS	SHEET NO.
317	16W-2,RS-4;17W-1,RS-3	FULTON	240	162

CONTRACT NO. 88703

ILLINOIS FED. AID PROJECT

FINAL SURVEY			
NOTE BOOK	SURVEYED		BY
	PLOTTED		DATE
	TEMPLATE		
	AREAS		
NO.	AREAS CHECKED		

ORIGINAL SURVEY			
NOTE BOOK	SURVEYED		BY
	PLOTTED		DATE
	TEMPLATE		
	AREAS		
NO.	AREAS CHECKED		

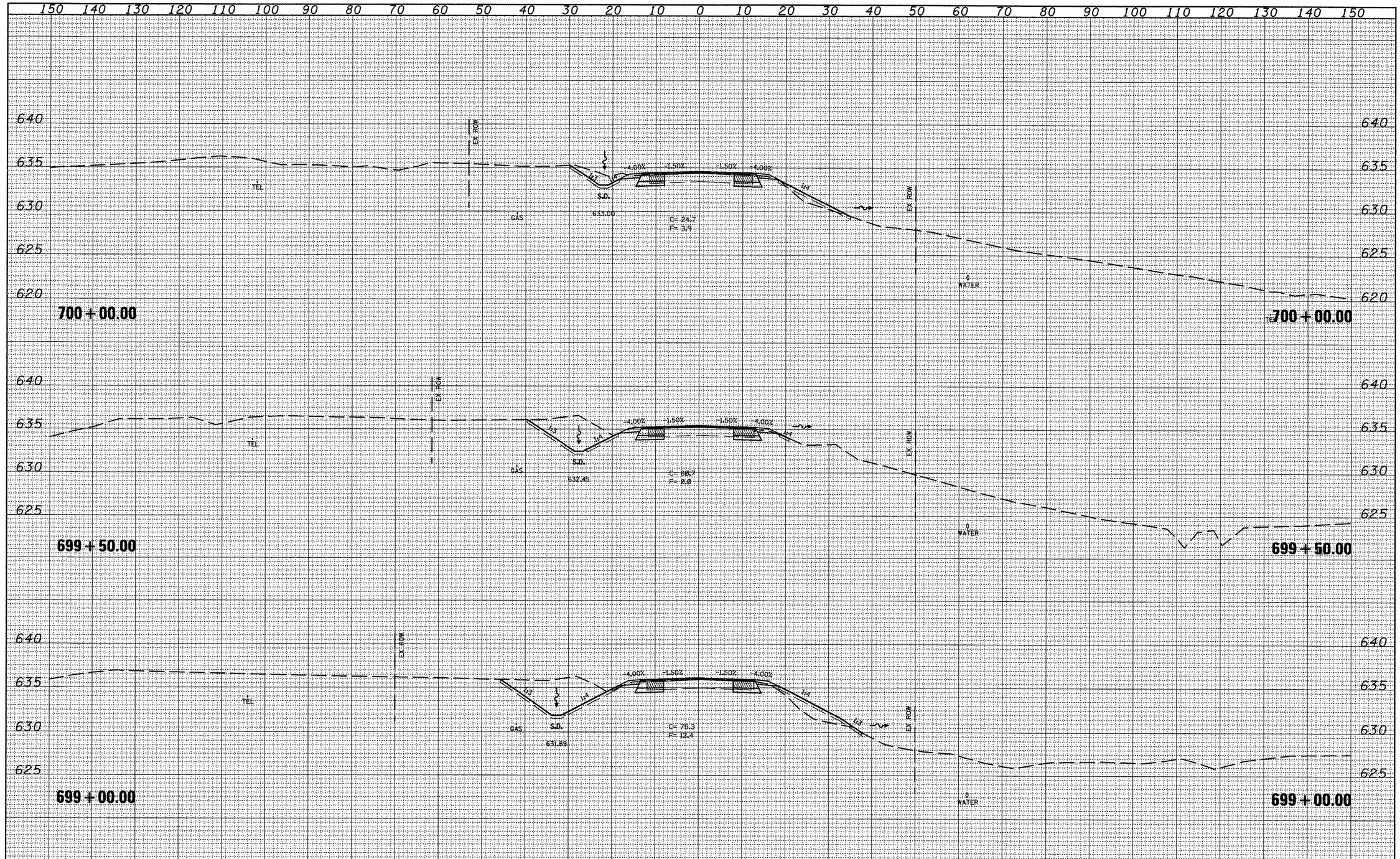

FILE NAME = xsec_sheet.dgn	USER NAME = jochums,jg	DESIGNED -	REVISED -
		DRAWN -	REVISED -
	PLOT SCALE = 20.0000 ' / IN.	CHECKED -	REVISED -
	PLOT DATE = 3/11/2010	DATE -	REVISED -

STATE OF ILLINOIS
DEPARTMENT OF TRANSPORTATION

CROSS SECTIONS

SCALE: | SHEET NO. OF SHEETS | STA. 699+00.00 TO STA. 700+00.00

F.A.P. RTE.	SECTION	COUNTY	TOTAL SHEETS	SHEET NO.
317	16W-2,RS-4;17W-1,RS-3	FULTON	24D	163

CONTRACT NO. 88703

ILLINOIS FED. AID PROJECT

FINAL SURVEY	BY	DATE
SURVEYED		
PLOTTED		
TOPOGRAPHY		
AREAS		
AREAS CHECKED		
NOTE BOOK NO.		

ORIGINAL SURVEY	BY	DATE
SURVEYED		
PLOTTED		
TOPOGRAPHY		
AREAS		
AREAS CHECKED		
NOTE BOOK NO.		

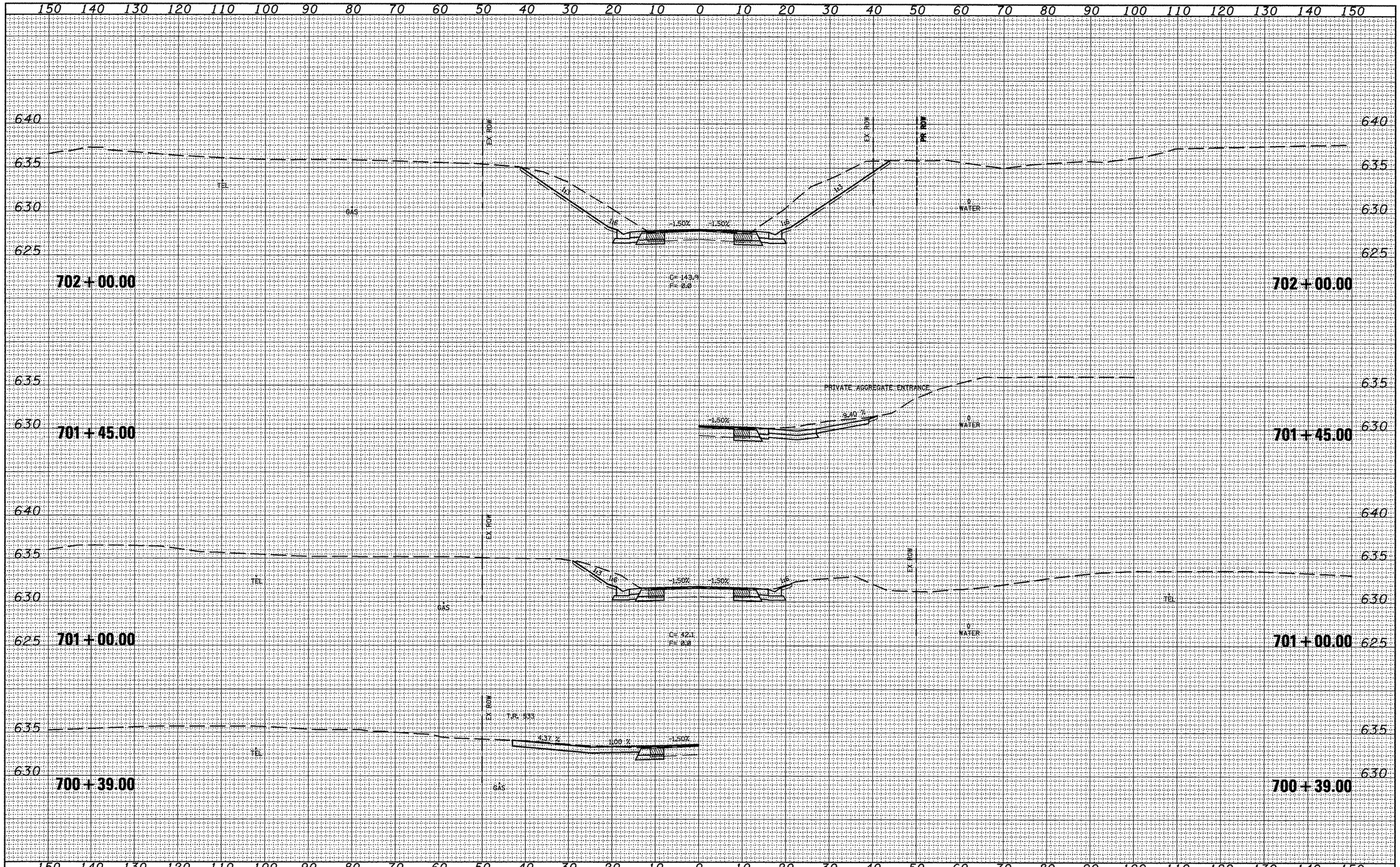

FILE NAME = xsec_sheet.dgn	USER NAME = jochums,jg	DESIGNED -	REVISED -
		DRAWN -	REVISED -
	PLOT SCALE = 20.0000 ' / IN.	CHECKED -	REVISED -
	PLOT DATE = 3/11/2010	DATE -	REVISED -

STATE OF ILLINOIS
DEPARTMENT OF TRANSPORTATION

CROSS SECTIONS

SCALE: | SHEET NO. OF SHEETS | STA. 700+39.00 TO STA. 702+00.00

F.A.P. RTE.	SECTION	COUNTY	TOTAL SHEETS	SHEET NO.
317	16W-2,RS-4;17W-1,RS-3	FULTON	240	164

CONTRACT NO. 88703

ILLINOIS FED. AID PROJECT

ORIGINAL SURVEY	BY	DATE
SURVEYED		
PLOTTED		
TOPOGRAPHY		
DUPLICATE		
NOTE BOOK	AREAS	
NO.	AREAS CHECKED	

FINAL SURVEY	BY	DATE
SURVEYED		
PLOTTED		
TOPOGRAPHY		
DUPLICATE		
NOTE BOOK	AREAS	
NO.	AREAS CHECKED	

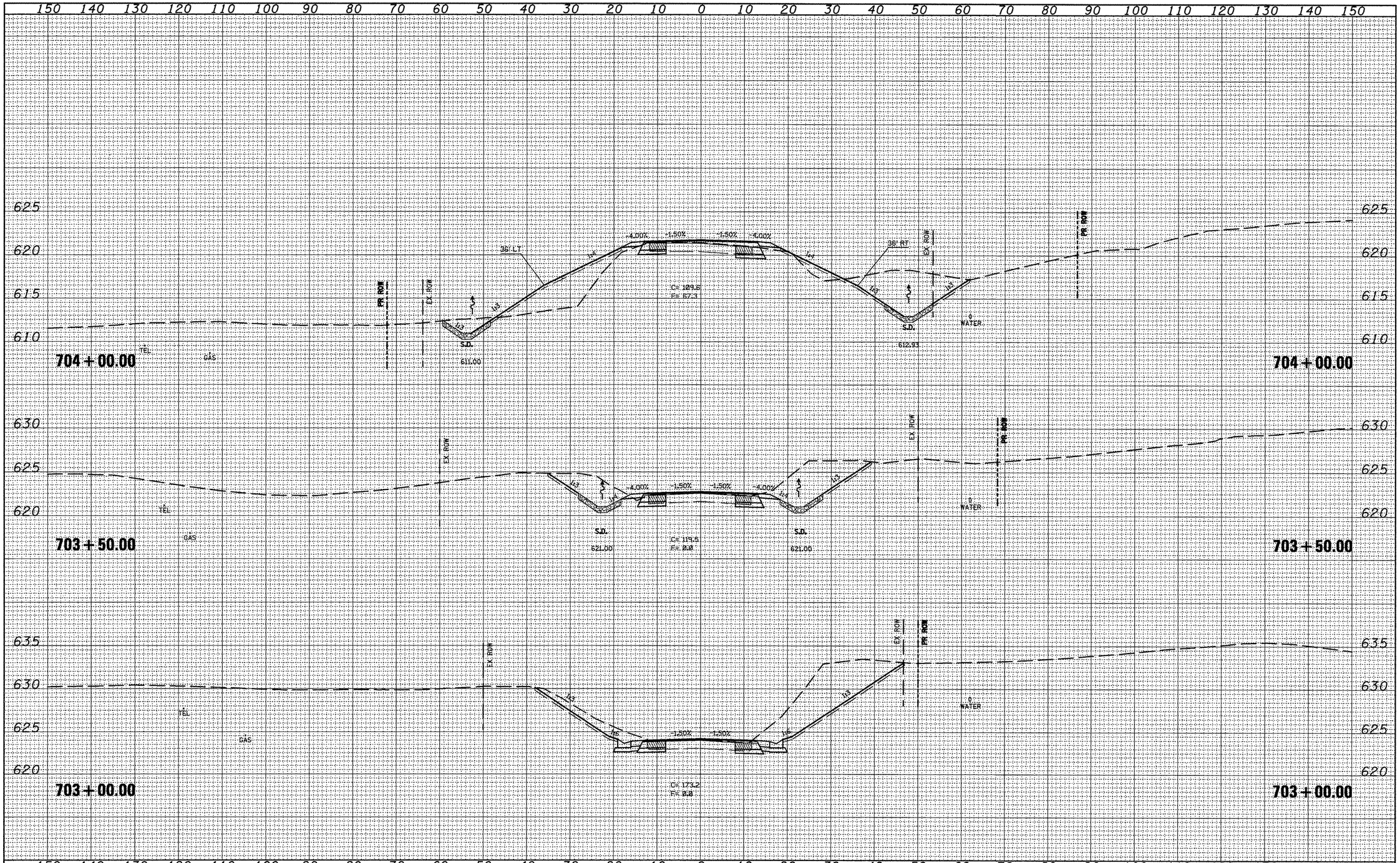

FILE NAME = xsec_sheet.dgn	USER NAME = jochumsjg	DESIGNED -	REVISED -
		DRAWN -	REVISED -
	PLOT SCALE = 20.0000 ' / IN.	CHECKED -	REVISED -
	PLOT DATE = 3/12/2010	DATE -	REVISED -

STATE OF ILLINOIS
DEPARTMENT OF TRANSPORTATION

CROSS SECTIONS

SCALE: | SHEET NO. OF SHEETS | STA. 703+00.00 TO STA. 704+00.00

F.A.P. RTE.	SECTION	COUNTY	TOTAL SHEETS	SHEET NO.
317	16W-2,RS-4;17W-1,RS-3	FULTON	240	165

CONTRACT NO. 88703

ILLINOIS FED. AID PROJECT

FINAL SURVEY		BY	DATE
NOTE BOOK	SURVEYED		
	PLOTTED		
	TEMPLATE		
	AREAS		
NO.	AREAS CHECKED		

ORIGINAL SURVEY		BY	DATE
NOTE BOOK	SURVEYED		
	PLOTTED		
	TEMPLATE		
	AREAS		
NO.	AREAS CHECKED		

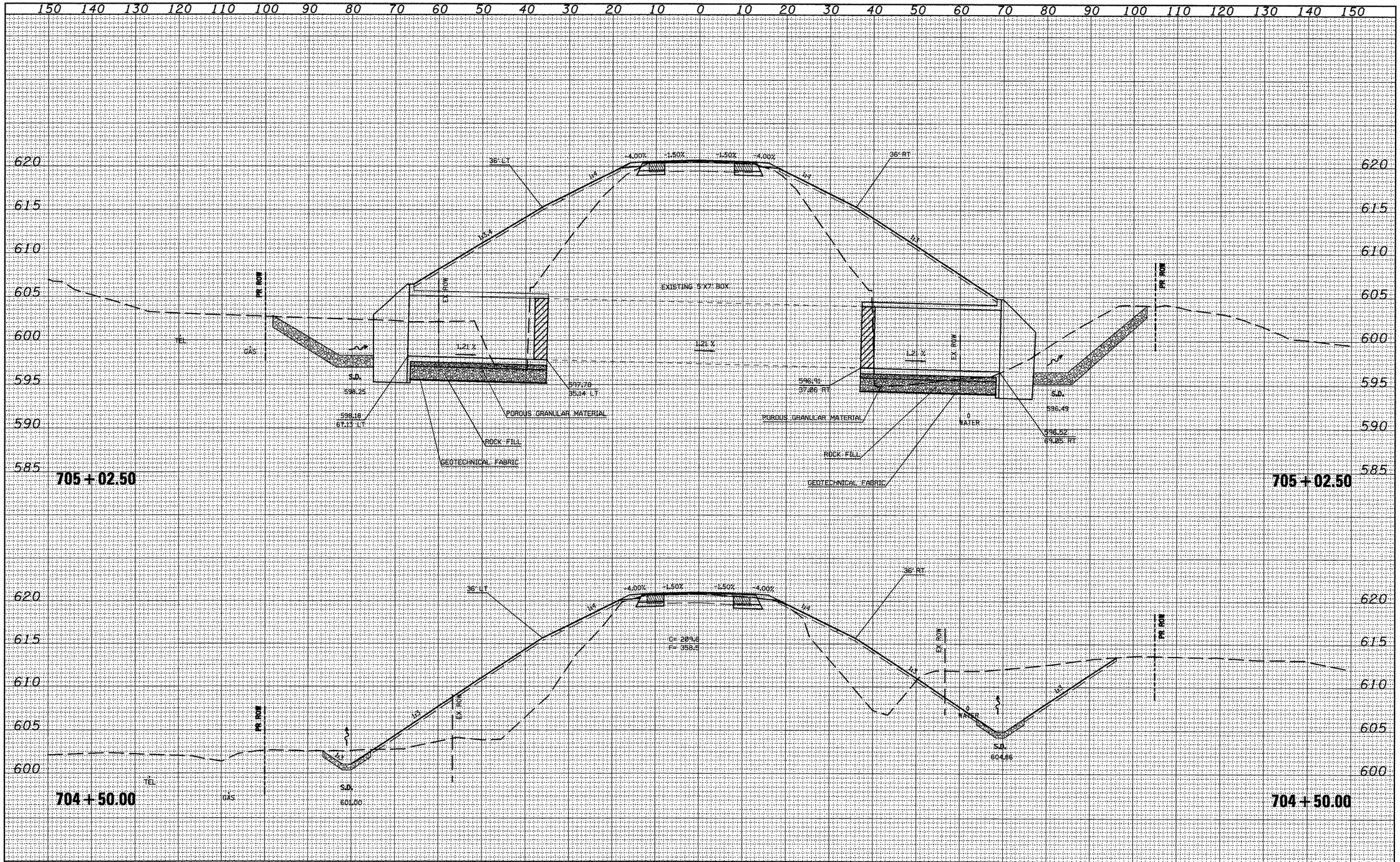

FILE NAME = xsec_sheet.dgn	USER NAME = jochumsjg	DESIGNED -	REVISED -
		DRAWN -	REVISED -
	PLOT SCALE = 20.0000 ' / IN.	CHECKED -	REVISED -
	PLOT DATE = 3/11/2010	DATE -	REVISED -

STATE OF ILLINOIS
DEPARTMENT OF TRANSPORTATION

CROSS SECTIONS

SCALE: | SHEET NO. OF SHEETS | STA. 704+50.00 TO STA. 705+02.50

F.A.P. RTE.	SECTION	COUNTY	TOTAL SHEETS	SHEET NO.
317	16W-2,RS-4;17W-1,RS-3	FULTON	240	166

CONTRACT NO. 88703

ILLINOIS FED. AID PROJECT

FINAL SURVEY	SURVEYED	BY	DATE
	PLOTTED		
	TEMPLATE		
NOTE BOOK	AREAS		
NO.	AREAS CHECKED		

ORIGINAL SURVEY	SURVEYED	BY	DATE
	PLOTTED		
	TEMPLATE		
NOTE BOOK	AREAS		
NO.	AREAS CHECKED		

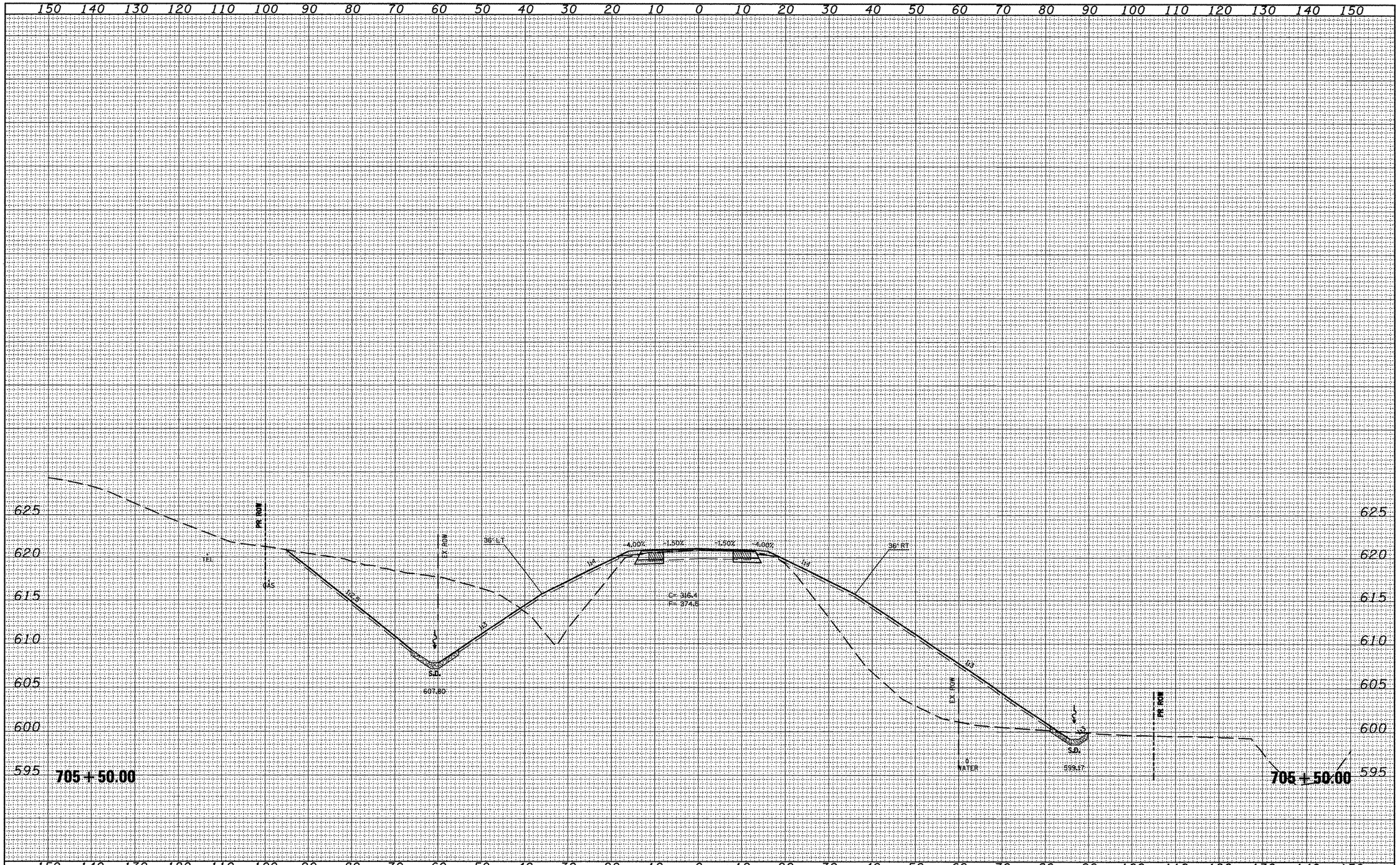

FILE NAME = xsec_sheet.dgn	USER NAME = jochumsjg	DESIGNED -	REVISED -
		DRAWN -	REVISED -
	PLOT SCALE = 20.0000 ' / IN.	CHECKED -	REVISED -
	PLOT DATE = 3/11/2010	DATE -	REVISED -

STATE OF ILLINOIS
DEPARTMENT OF TRANSPORTATION

CROSS SECTIONS

SCALE: | SHEET NO. OF SHEETS | STA. 705+50.00 TO STA. 705+50.00

F.A.P. RTE.	SECTION	COUNTY	TOTAL SHEETS	SHEET NO.
317	16W-2,RS-4;17W-1,RS-3	FULTON	240	167

CONTRACT NO. 88703

ILLINOIS FED. AID PROJECT

FINAL SURVEY	BY	DATE
SURVEYED		
PLOTTED		
TRAVERSE		
AREAS		
AREAS CHECKED		
NOTE BOOK NO.		

ORIGINAL SURVEY	BY	DATE
SURVEYED		
PLOTTED		
TRAVERSE		
AREAS		
AREAS CHECKED		
NOTE BOOK NO.		

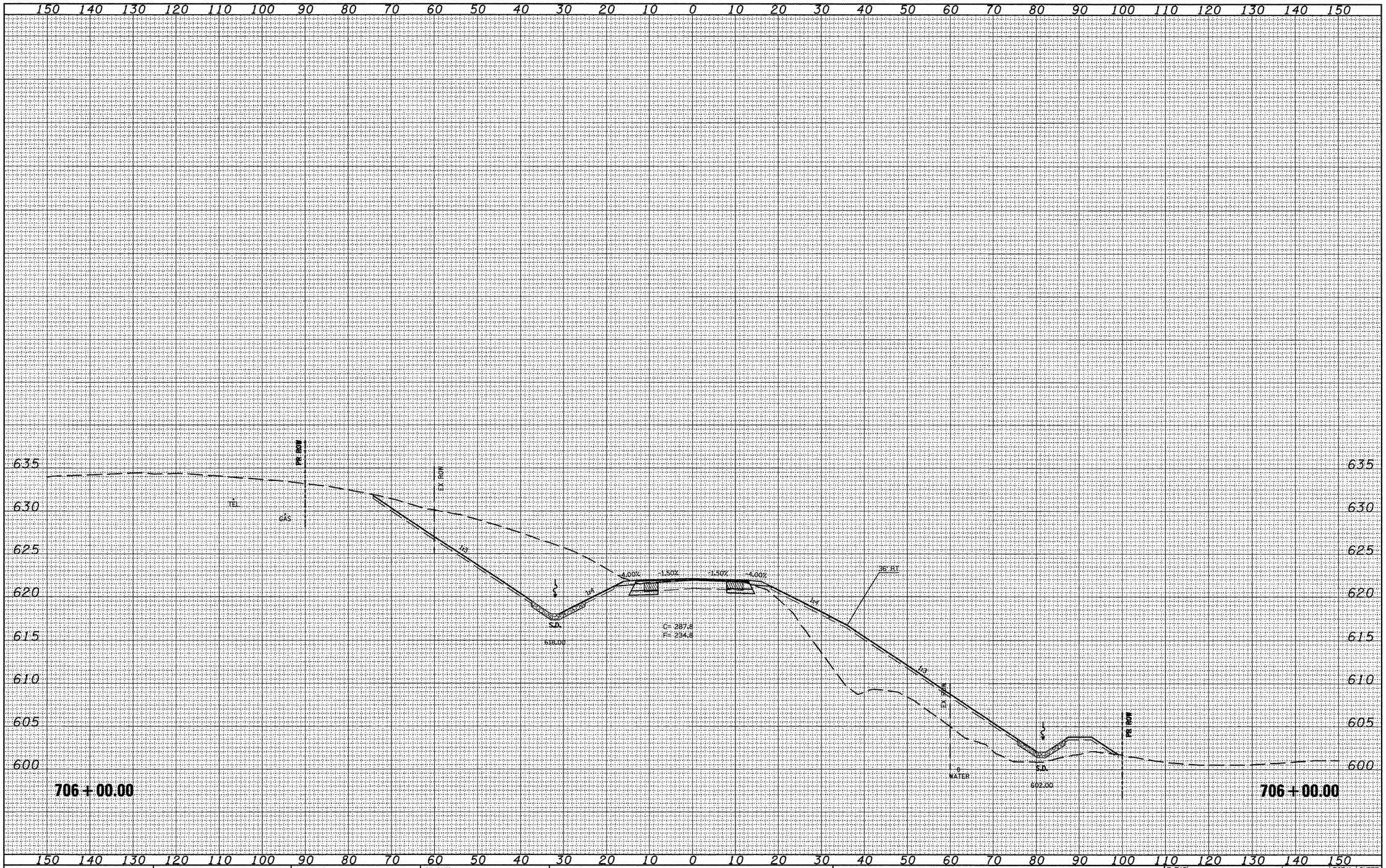

FINAL SURVEY	BY	DATE
SURVEYED		
PLOTTED		
TRAVERSE		
NOTE BOOK		
NO.	AREAS	
	AREAS CHECKED	

ORIGINAL SURVEY	BY	DATE
SURVEYED		
PLOTTED		
TRAVERSE		
NOTE BOOK		
NO.	AREAS	
	AREAS CHECKED	

FILE NAME = xsec_sheet.dgn	USER NAME = jochumsjg	DESIGNED -	REVISED -
		DRAWN -	REVISED -
	PLOT SCALE = 20.0000 ' / IN.	CHECKED -	REVISED -
	PLOT DATE = 3/11/2010	DATE -	REVISED -

STATE OF ILLINOIS
DEPARTMENT OF TRANSPORTATION

CROSS SECTIONS

SCALE: | SHEET NO. OF SHEETS | STA. 706+00.00 TO STA. 706+00.00

F.A.P. RTE.	SECTION	COUNTY	TOTAL SHEETS	SHEET NO.
317	16W-2,RS-4;17W-1,RS-3	FULTON	240	168

CONTRACT NO. 88703

ILLINOIS | FED. AID PROJECT

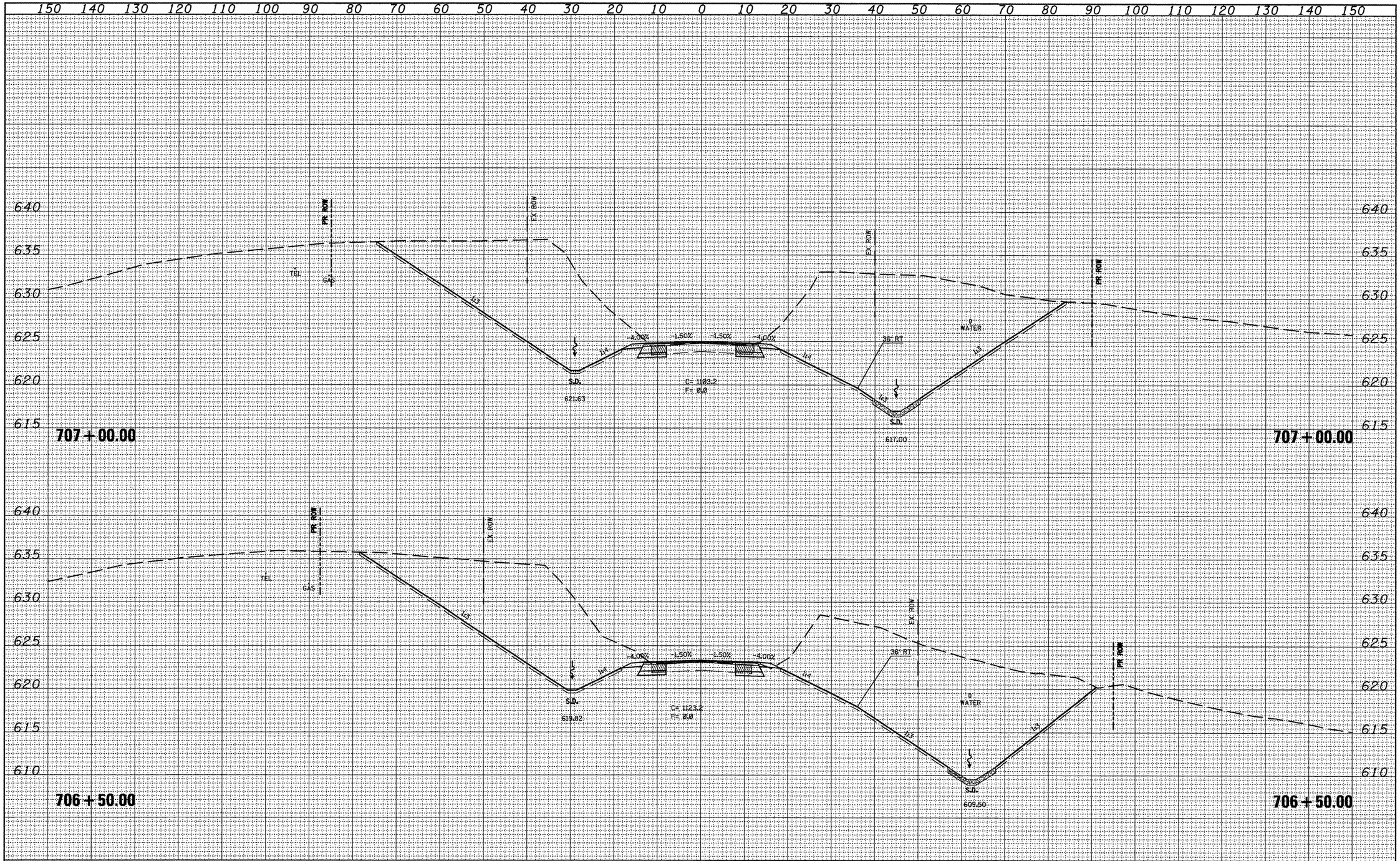

FILE NAME = xsec_sheet.dgn	USER NAME = jochumsjg	DESIGNED -	REVISED -
		DRAWN -	REVISED -
	PLOT SCALE = 20.0000 ' / IN.	CHECKED -	REVISED -
	PLOT DATE = 3/11/2010	DATE -	REVISED -

STATE OF ILLINOIS
DEPARTMENT OF TRANSPORTATION

CROSS SECTIONS

SCALE: | SHEET NO. OF SHEETS | STA. 706+50.00 TO STA. 707+00.00

F.A.P. RTE.	SECTION	COUNTY	TOTAL SHEETS	SHEET NO.
317	16W-2,RS-4;17W-1,RS-3	FULTON	240	169

CONTRACT NO. 88703

ILLINOIS FED. AID PROJECT

FINAL SURVEY		BY	DATE
NOTE BOOK	SURVEYED		
	PLOTTED		
	TEMPLATE		
	AREAS		
NO.	AREAS CHECKED		

ORIGINAL SURVEY		BY	DATE
NOTE BOOK	SURVEYED		
	PLOTTED		
	TEMPLATE		
	AREAS		
NO.	AREAS CHECKED		

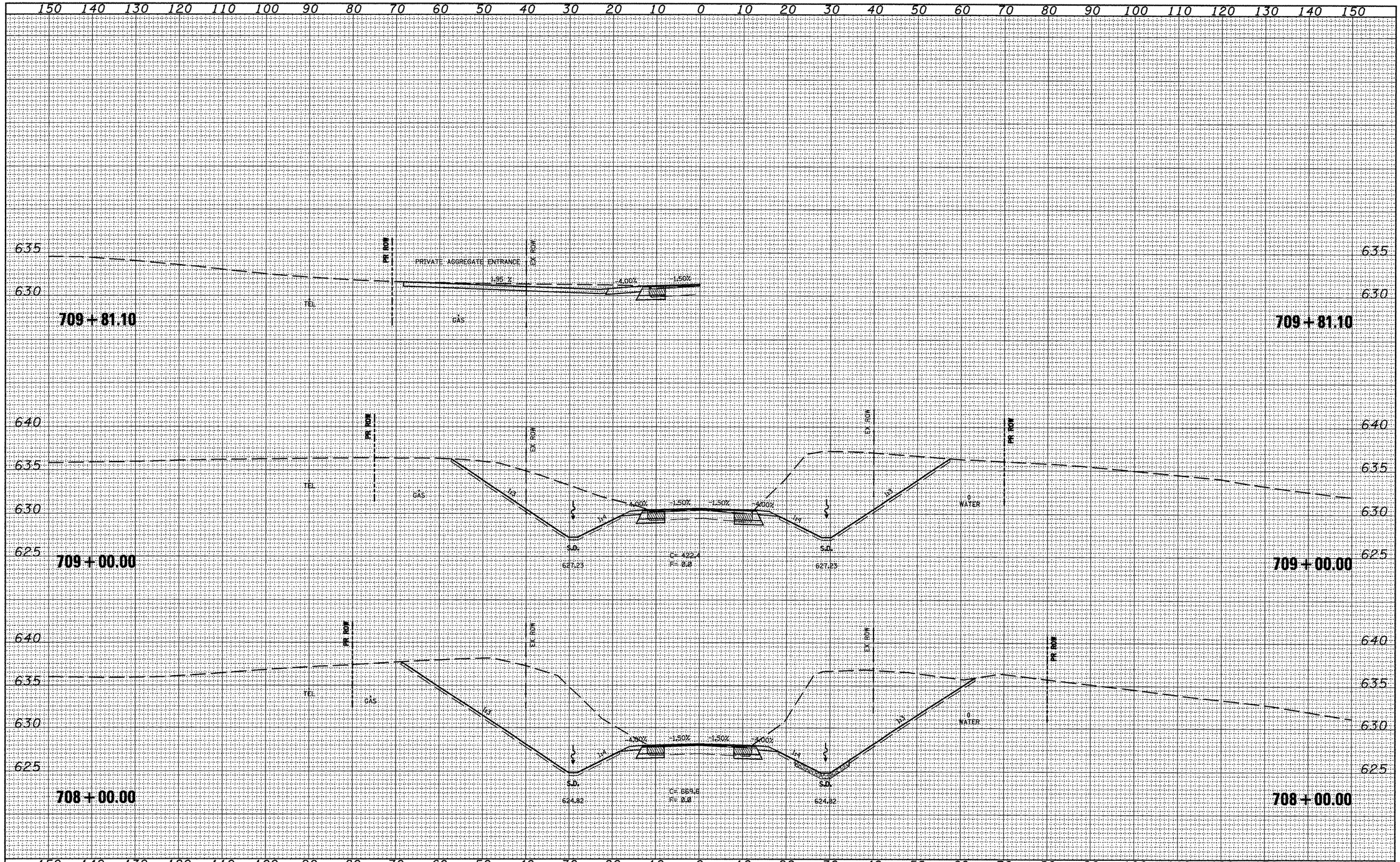

FILE NAME = xsec_sheet.dgn	USER NAME = jochums.jg	DESIGNED -	REVISED -
		DRAWN -	REVISED -
	PLOT SCALE = 20.0000 ' / IN.	CHECKED -	REVISED -
	PLOT DATE = 3/11/2010	DATE -	REVISED -

STATE OF ILLINOIS
DEPARTMENT OF TRANSPORTATION

CROSS SECTIONS

SCALE: | SHEET NO. OF SHEETS | STA. 708+00.00 TO STA. 709+81.10

F.A.P. RTE.	SECTION	COUNTY	TOTAL SHEETS	SHEET NO.
317	16W-2,RS-4;17W-1,RS-3	FULTON	240	170

CONTRACT NO. 88703

ILLINOIS FED. AID PROJECT

FINAL SURVEY	SURVEYED	BY	DATE
	PLOTTED		
NOTE BOOK	TEMPLATE		
	AREAS		
NO.	AREAS CHECKED		

ORIGINAL SURVEY	SURVEYED	BY	DATE
	PLOTTED		
NOTE BOOK	TEMPLATE		
	AREAS		
NO.	AREAS CHECKED		

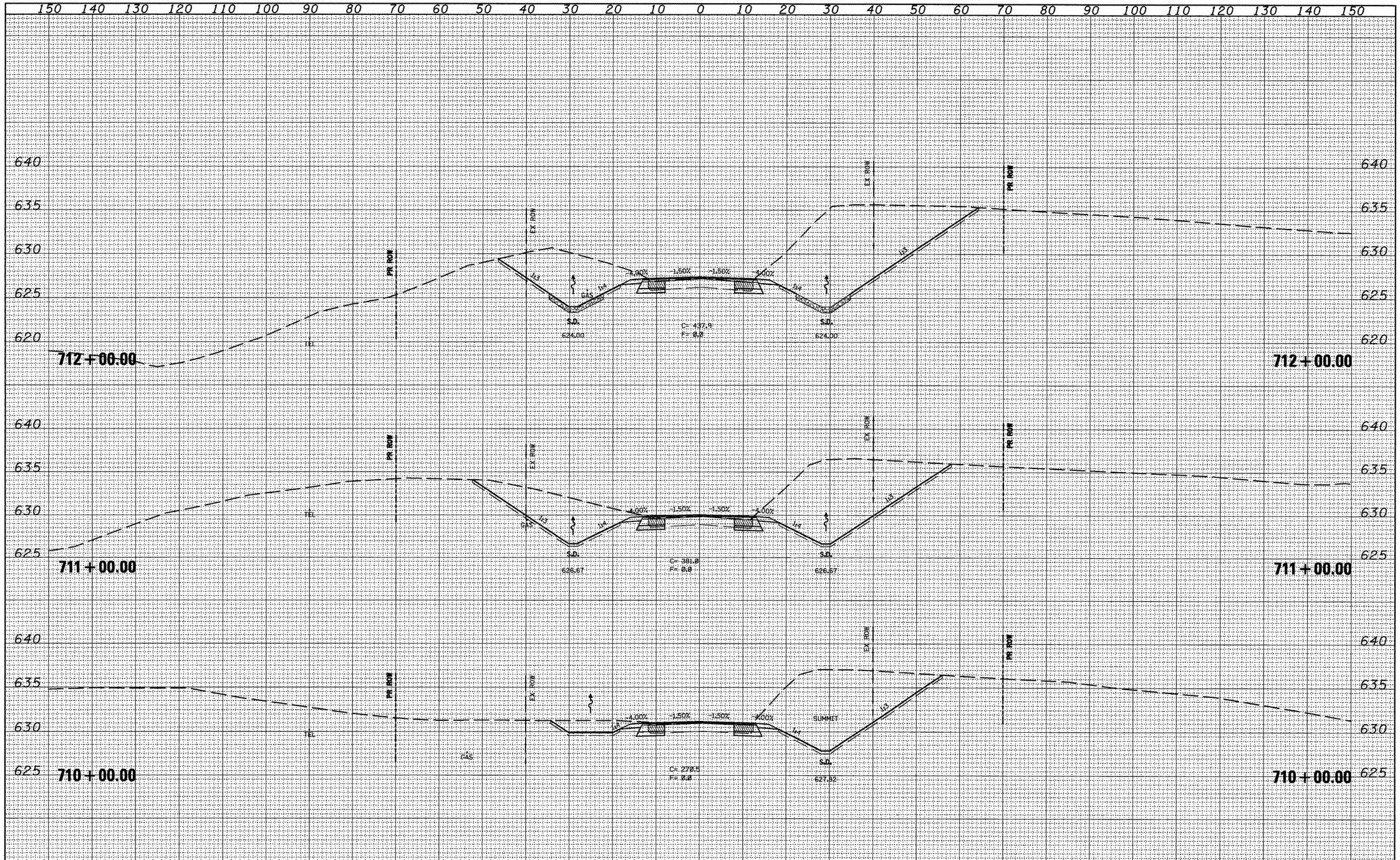

FILE NAME = xsec_sheet.dgn	USER NAME = jochumsjg	DESIGNED -	REVISED -
		DRAWN -	REVISED -
	PLOT SCALE = 20.0000 ' / IN.	CHECKED -	REVISED -
	PLOT DATE = 3/11/2010	DATE -	REVISED -

STATE OF ILLINOIS
DEPARTMENT OF TRANSPORTATION

CROSS SECTIONS

SCALE: | SHEET NO. OF SHEETS | STA. 710+00.00 TO STA. 712+00.00

F.A.P. RTE.	SECTION	COUNTY	TOTAL SHEETS	SHEET NO.
317	16W-2,RS-4;17W-1,RS-3	FULTON	240	171

CONTRACT NO. 88703

ILLINOIS FED. AID PROJECT

FINAL SURVEY — NOTE BOOK NO. — SURVEYED / PLOTTED / TEMPLATE / AREAS / AREAS CHECKED — BY — DATE

ORIGINAL SURVEY — NOTE BOOK NO. — SURVEYED / PLOTTED / TEMPLATE / AREAS / AREAS CHECKED — BY — DATE

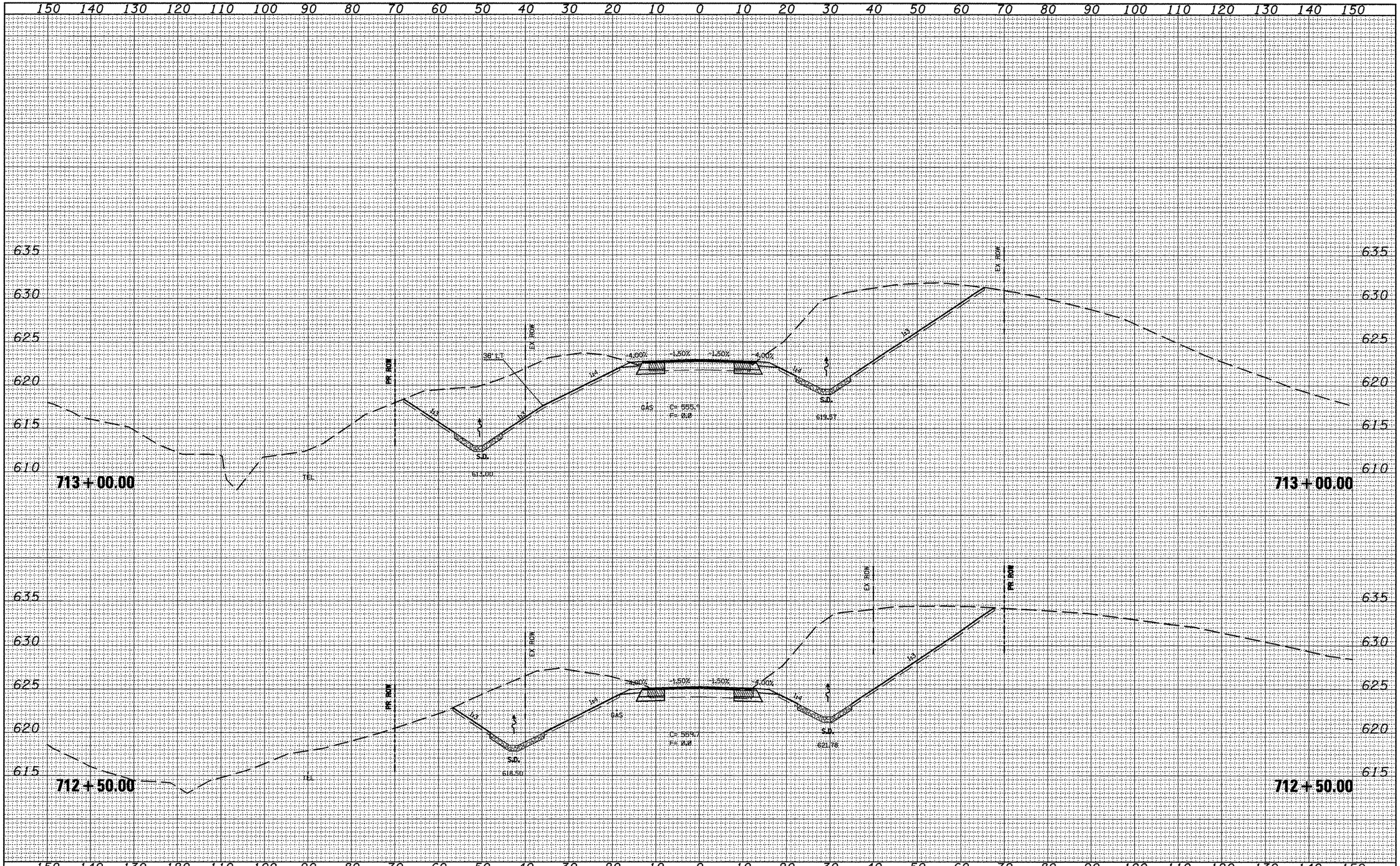

FINAL SURVEY		BY	DATE
NOTE BOOK	SURVEYED		
	PLOTTED		
	TEMPLATE		
	AREAS		
	AREAS CHECKED		
NO.			

ORIGINAL SURVEY		BY	DATE
NOTE BOOK	SURVEYED		
	PLOTTED		
	TEMPLATE		
	AREAS		
	AREAS CHECKED		
NO.			

FILE NAME = xsec_sheet.dgn	USER NAME = jochums.jg	DESIGNED -	REVISED -
		DRAWN -	REVISED -
	PLOT SCALE = 20.0000 ' / IN.	CHECKED -	REVISED -
	PLOT DATE = 3/11/2010	DATE -	REVISED -

STATE OF ILLINOIS
DEPARTMENT OF TRANSPORTATION

CROSS SECTIONS

SCALE: | SHEET NO. OF SHEETS | STA. 712+50.00 TO STA. 713+00.00

F.AEAP RTE.	SECTION	COUNTY	TOTAL SHEETS	SHEET NO.
317	16W-2,RS-4;17W-1,RS-3	FULTON	240	172

CONTRACT NO. 88703

ILLINOIS FED. AID PROJECT

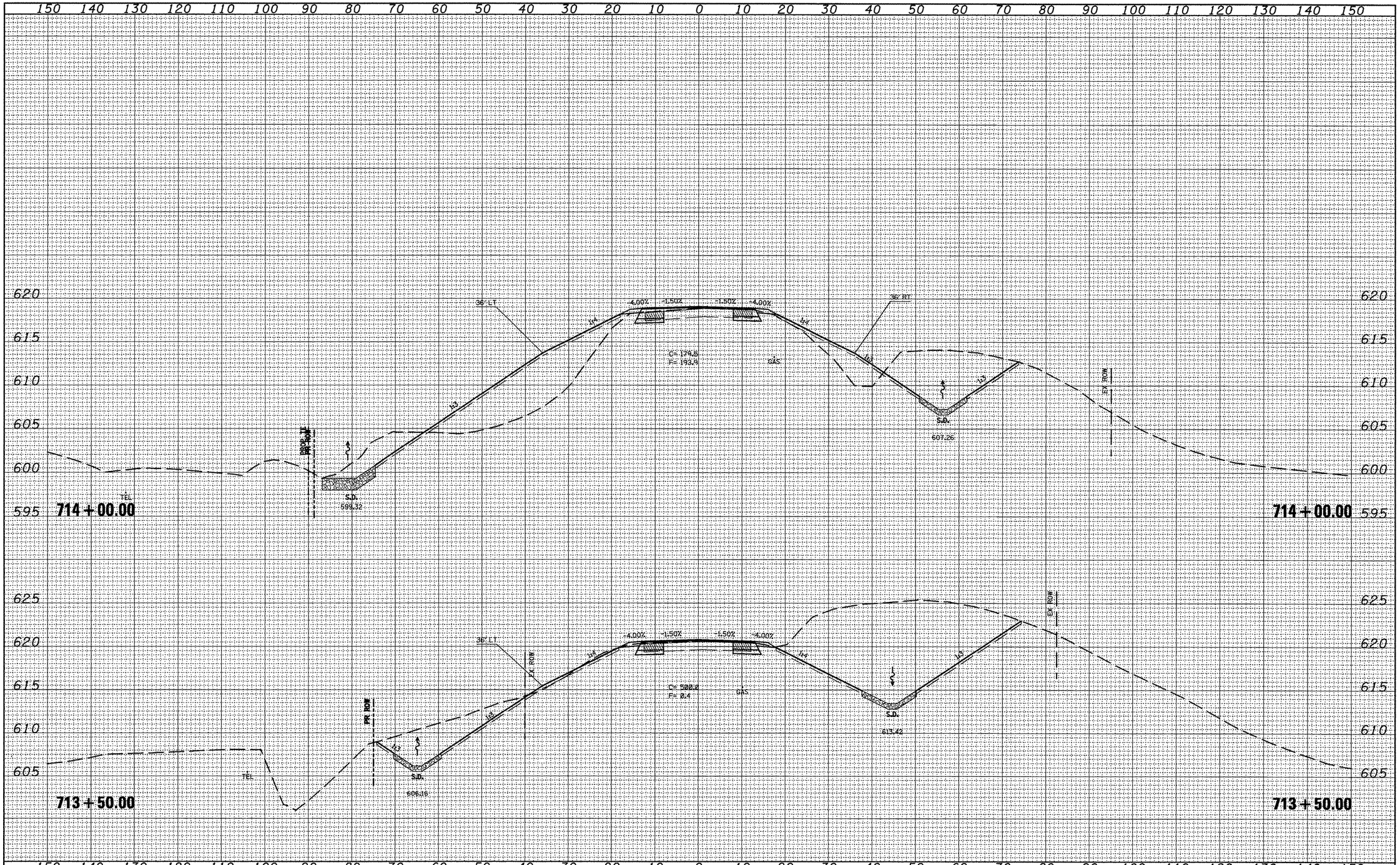

FILE NAME = xsec_sheet.dgn	USER NAME = jochume,jg	DESIGNED -	REVISED -
		DRAWN -	REVISED -
	PLOT SCALE = 20.0000 ' / IN.	CHECKED -	REVISED -
	PLOT DATE = 3/11/2010	DATE -	REVISED -

STATE OF ILLINOIS
DEPARTMENT OF TRANSPORTATION

CROSS SECTIONS

SCALE: | SHEET NO. OF SHEETS | STA. 713+50.00 TO STA. 714+00.00

F.A.P. RTE.	SECTION	COUNTY	TOTAL SHEETS	SHEET NO.
317	16W-2,RS-4;17W-1,RS-3	FULTON	240	173

CONTRACT NO. 88703

ILLINOIS | FED. AID PROJECT

FINAL SURVEY		BY	DATE
NOTE BOOK NO.	SURVEYED		
	PLOTTED		
	TEMPLATE		
	AREAS		
	AREAS CHECKED		

ORIGINAL SURVEY		BY	DATE
NOTE BOOK NO.	SURVEYED		
	PLOTTED		
	TEMPLATE		
	AREAS		
	AREAS CHECKED		

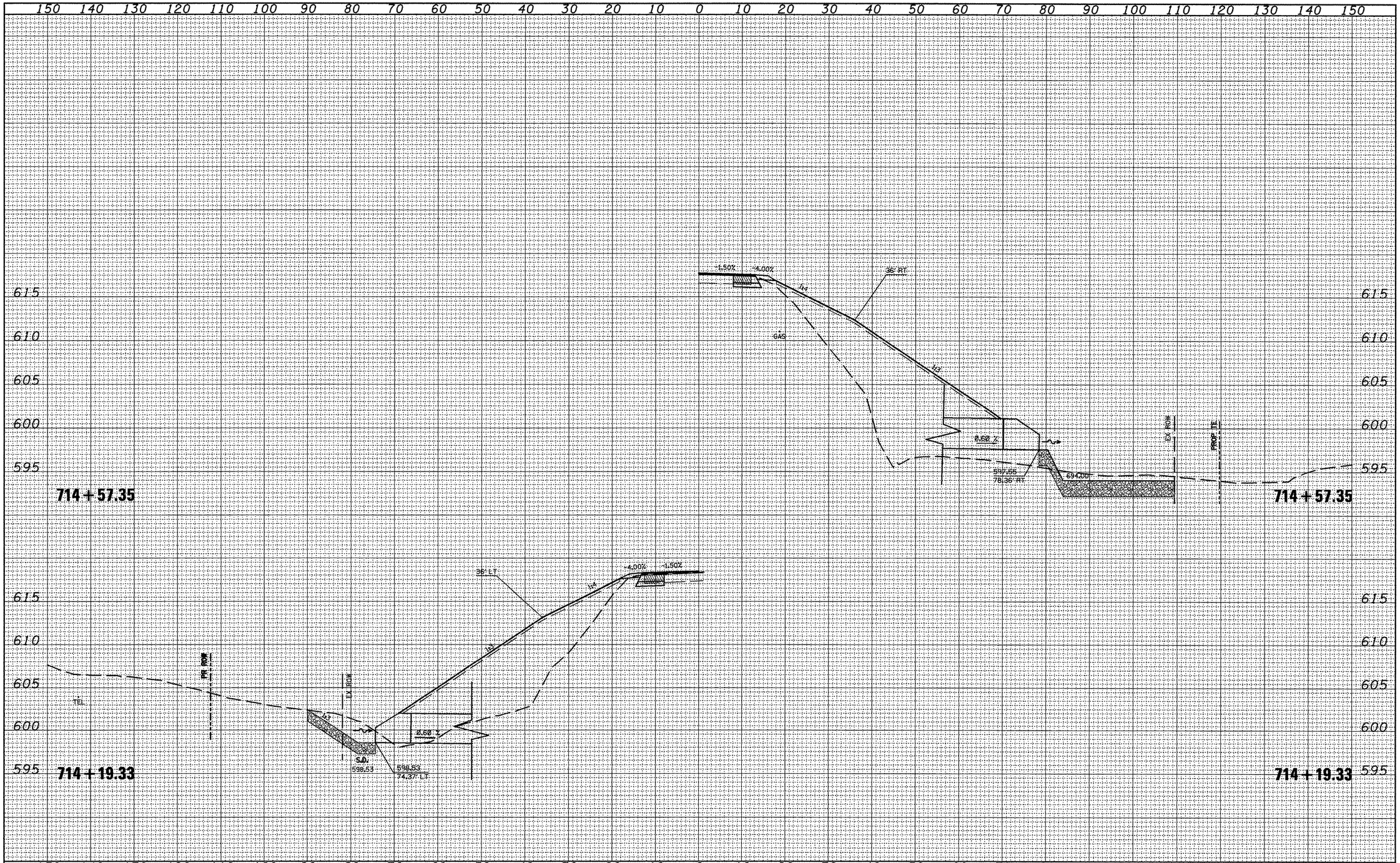

FILE NAME = xsec_sheet.dgn	USER NAME = jochumsjg	DESIGNED -	REVISED -
		DRAWN -	REVISED -
	PLOT SCALE = 20.0000 ' / IN.	CHECKED -	REVISED -
	PLOT DATE = 3/12/2010	DATE -	REVISED -

STATE OF ILLINOIS
DEPARTMENT OF TRANSPORTATION

CROSS SECTIONS

SCALE: | SHEET NO. OF SHEETS | STA. 714+19.33 TO STA. 714+57.35

F.A.P. RTE.	SECTION	COUNTY	TOTAL SHEETS	SHEET NO.
317	16W-2,RS-4;17W-1,RS-3	FULTON	240	174

CONTRACT NO. 88703

ILLINOIS FED. AID PROJECT

FINAL SURVEY		BY	DATE
NOTE BOOK	SURVEYED		
	PLOTTED		
	TERRAIN		
	AREAS		
NO.	AREAS CHECKED		

ORIGINAL SURVEY		BY	DATE
NOTE BOOK	SURVEYED		
	PLOTTED		
	TERRAIN		
	AREAS		
NO.	AREAS CHECKED		

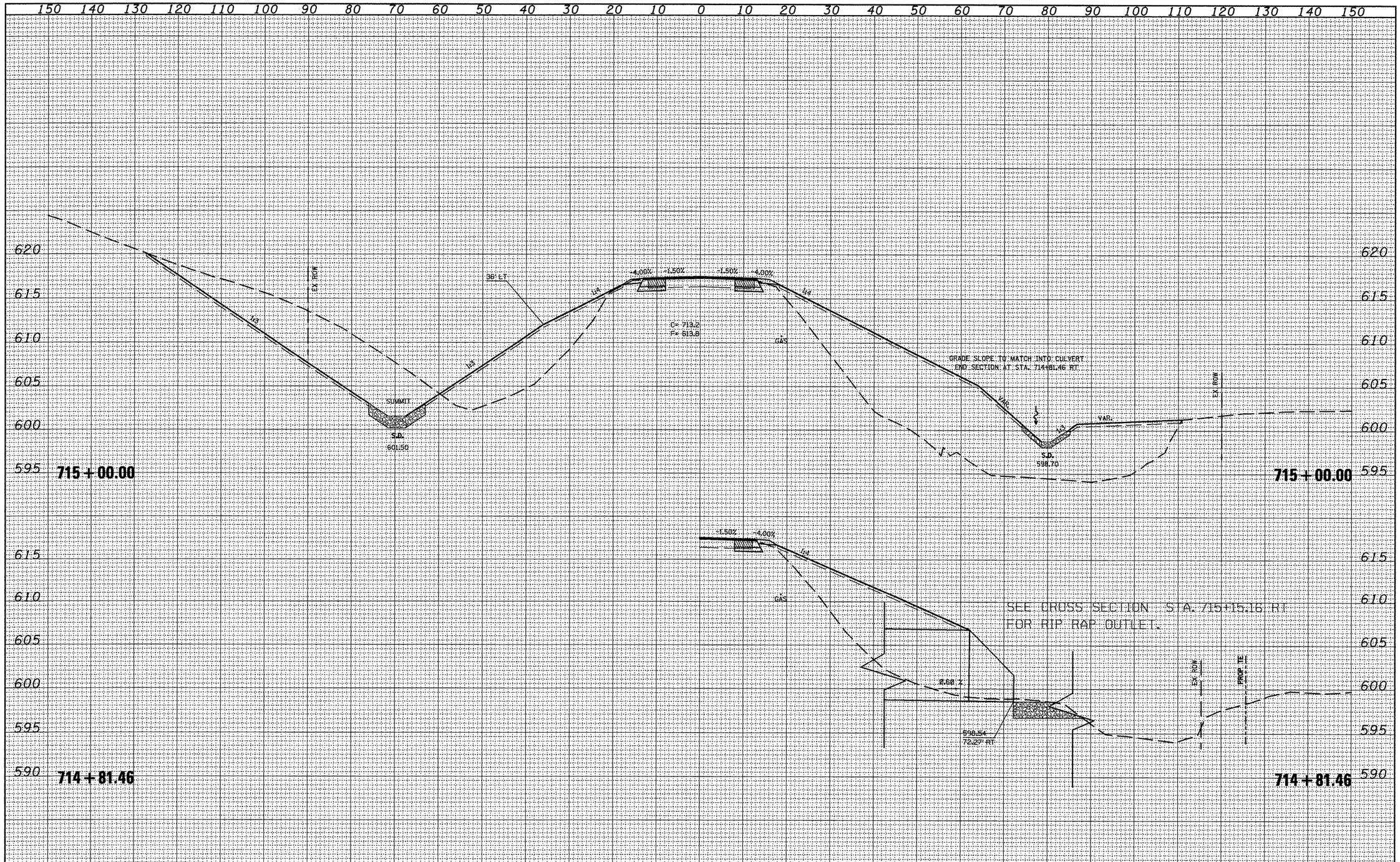

FILE NAME = xsec_sheet.dgn	USER NAME = jochums,jg	DESIGNED -	REVISED -
		DRAWN -	REVISED -
	PLOT SCALE = 20.0000 ' / IN.	CHECKED -	REVISED -
	PLOT DATE = 3/12/2010	DATE -	REVISED -

STATE OF ILLINOIS
DEPARTMENT OF TRANSPORTATION

CROSS SECTIONS

SCALE: | SHEET NO. OF SHEETS | STA. 714+81.46 TO STA. 715+00.00

F.A.P. RTE.	SECTION	COUNTY	TOTAL SHEETS	SHEET NO.
317	16W-2,RS-4;17W-1,RS-3	FULTON	240	175

CONTRACT NO. 88703

ILLINOIS FED. AID PROJECT

FINAL SURVEY		BY	DATE
NOTE BOOK	SURVEYED		
	PLOTTED		
	TEMPLATE		
	AREAS		
NO.	AREAS CHECKED		

ORIGINAL SURVEY		BY	DATE
NOTE BOOK	SURVEYED		
	PLOTTED		
	TEMPLATE		
	AREAS		
NO.	AREAS CHECKED		

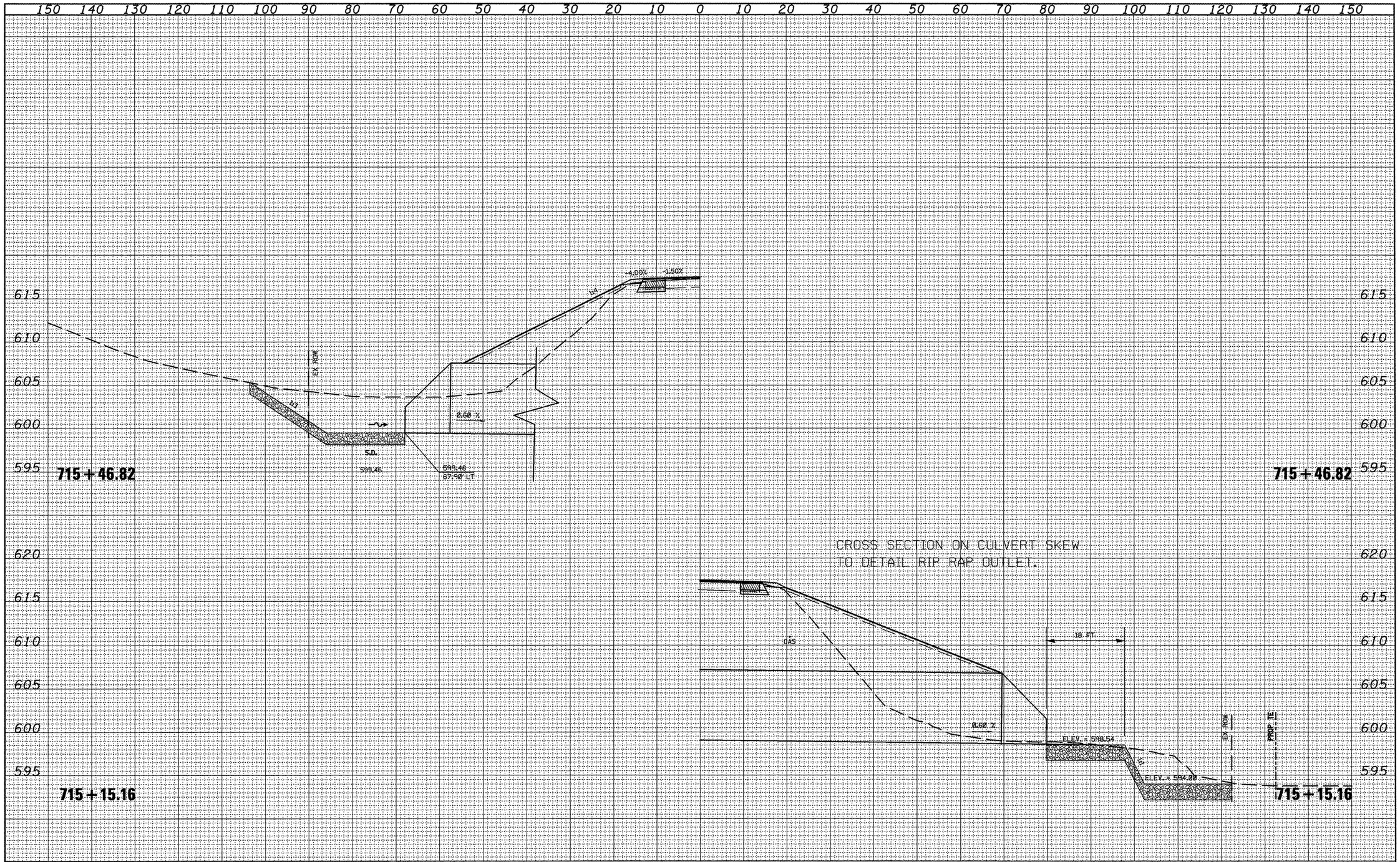

FINAL SURVEY	BY	DATE
SURVEYED		
PLOTTED		
TEMPLATE		
AREAS		
AREAS CHECKED		
NOTE BOOK NO.		

ORIGINAL SURVEY	BY	DATE
SURVEYED		
PLOTTED		
TEMPLATE		
AREAS		
AREAS CHECKED		
NOTE BOOK NO.		

FILE NAME = xsec_sheet.dgn	USER NAME = jochums,jg	DESIGNED -	REVISED -
		DRAWN -	REVISED -
	PLOT SCALE = 20.0000 ' / IN.	CHECKED -	REVISED -
	PLOT DATE = 3/12/2010	DATE -	REVISED -

STATE OF ILLINOIS
DEPARTMENT OF TRANSPORTATION

CROSS SECTIONS

SCALE: | SHEET NO. OF SHEETS | STA. 715+15.16 TO STA. 715+46.82

F.A.P. RTE.	SECTION	COUNTY	TOTAL SHEETS	SHEET NO.
317	16W-2,RS-4;17W-1,RS-3	FULTON	240	176

CONTRACT NO. 88703

ILLINOIS FED. AID PROJECT

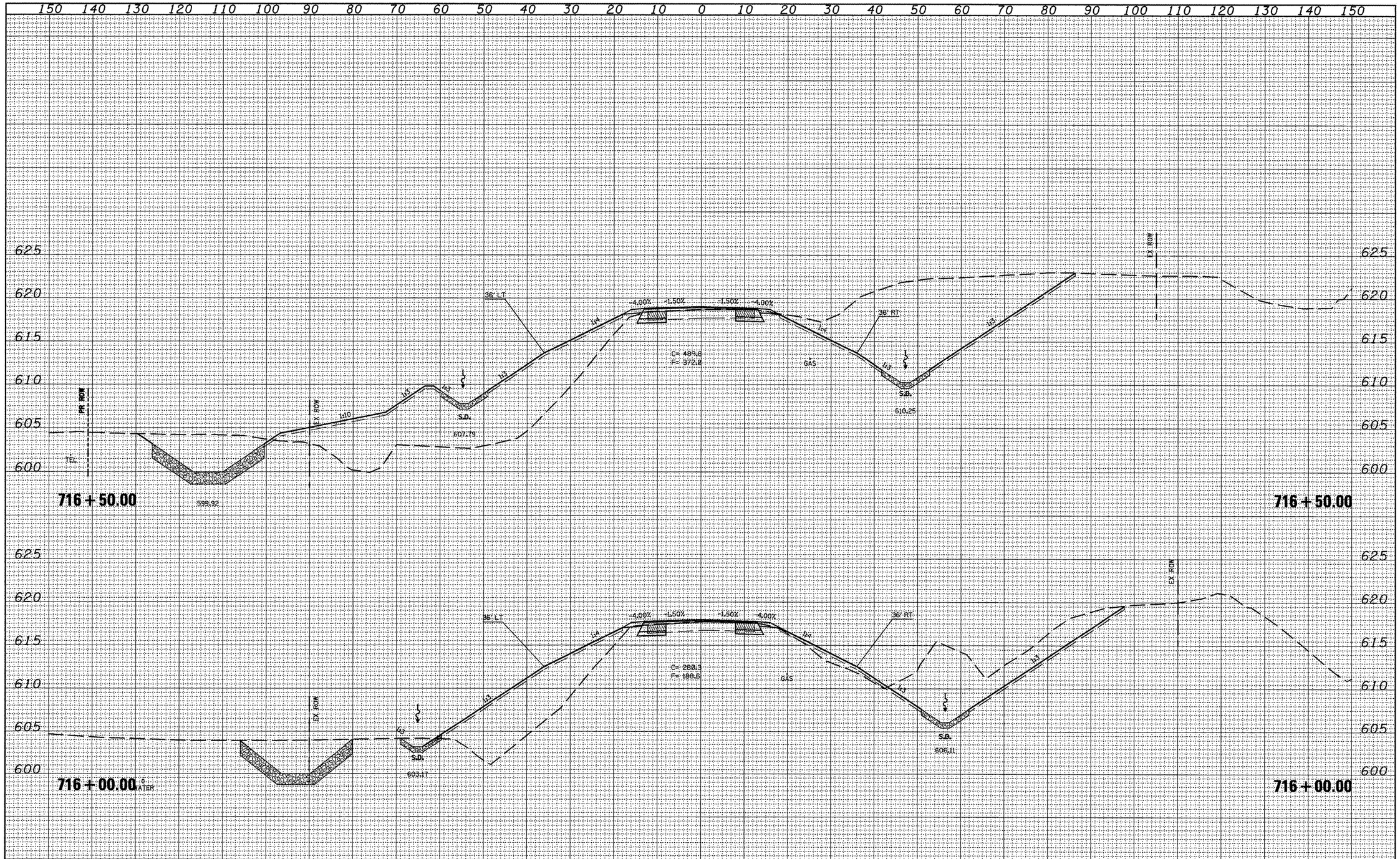

FILE NAME = xsec_sheet.dgn	USER NAME = jochumsjg	DESIGNED -	REVISED -	STATE OF ILLINOIS DEPARTMENT OF TRANSPORTATION	CROSS SECTIONS	F.A.P. RTE.	SECTION	COUNTY	TOTAL SHEETS	SHEET NO.
		DRAWN -	REVISED -			317	16W-2,RS-4;17W-1,RS-3	FULTON	240	177
	PLOT SCALE = 20.0000 ' / IN.	CHECKED -	REVISED -					CONTRACT NO. 88703		
	PLOT DATE = 3/11/2010	DATE -	REVISED -		SCALE: SHEET NO. OF SHEETS STA. 716+00.00 TO STA. 716+50.00			ILLINOIS FED. AID PROJECT		

FINAL SURVEY		BY	DATE
NOTE BOOK	SURVEYED		
	PLOTTED		
	TEMPLATE		
	AREAS		
NO.	AREAS CHECKED		

ORIGINAL SURVEY		BY	DATE
NOTE BOOK	SURVEYED		
	PLOTTED		
	TEMPLATE		
	AREAS		
NO.	AREAS CHECKED		

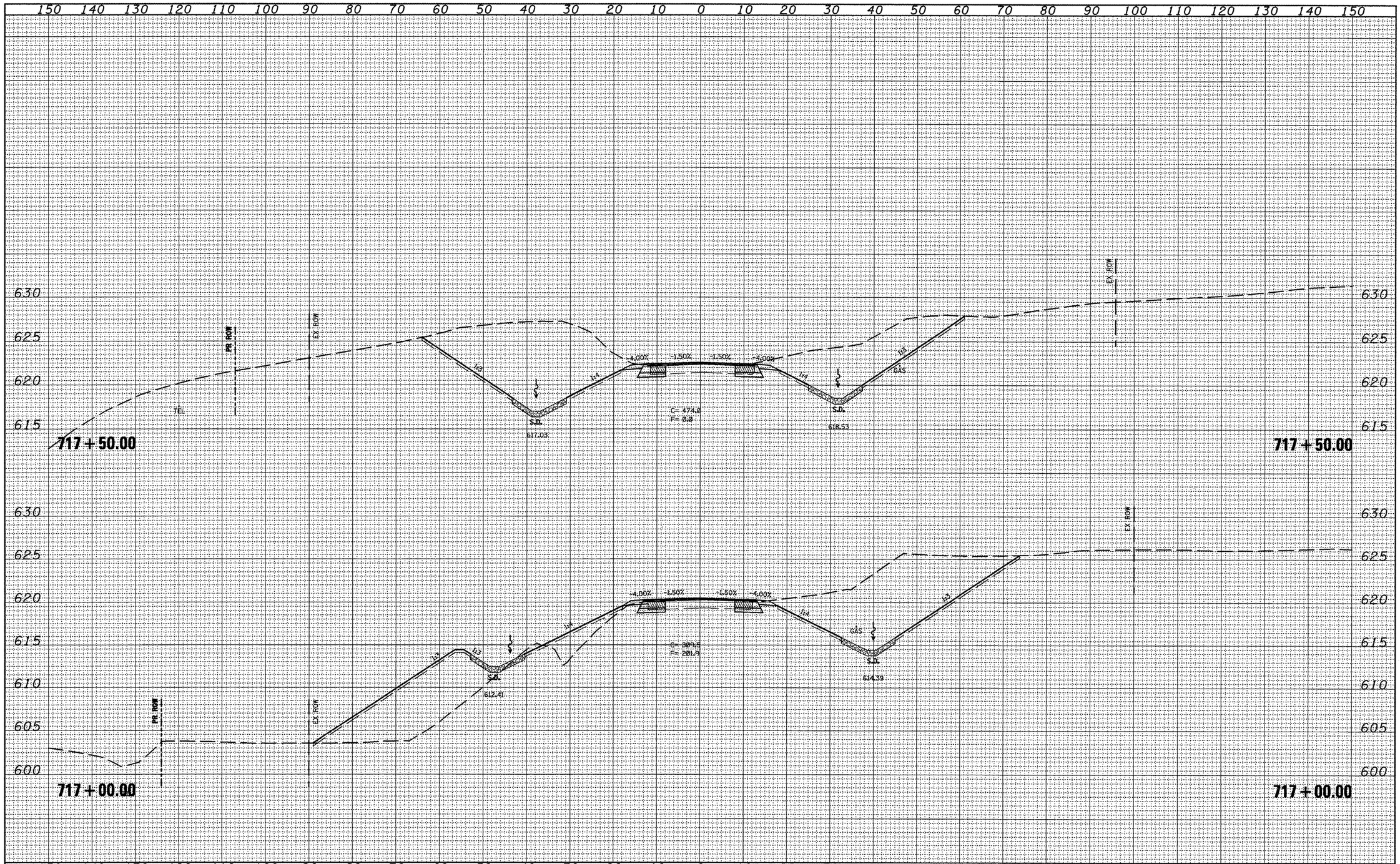

FINAL SURVEY	BY	DATE
SURVEYED		
PLOTTED		
TEMPLATE		
AREAS		
AREAS CHECKED		
NOTE BOOK NO.		

ORIGINAL SURVEY	BY	DATE
SURVEYED		
PLOTTED		
TEMPLATE		
AREAS		
AREAS CHECKED		
NOTE BOOK NO.		

FILE NAME = xsec_sheet.dgn	USER NAME = jochumsjg	DESIGNED -	REVISED -
		DRAWN -	REVISED -
	PLOT SCALE = 20.0000 ' / IN.	CHECKED -	REVISED -
	PLOT DATE = 3/11/2010	DATE -	REVISED -

STATE OF ILLINOIS
DEPARTMENT OF TRANSPORTATION

CROSS SECTIONS

SCALE: | SHEET NO. OF SHEETS | STA. 717+00.00 TO STA. 717+50.00

F.A.P. RTE.	SECTION	COUNTY	TOTAL SHEETS	SHEET NO.
317	16W-2,RS-4;17W-1,RS-3	FULTON	240	178

CONTRACT NO. 88703

ILLINOIS FED. AID PROJECT

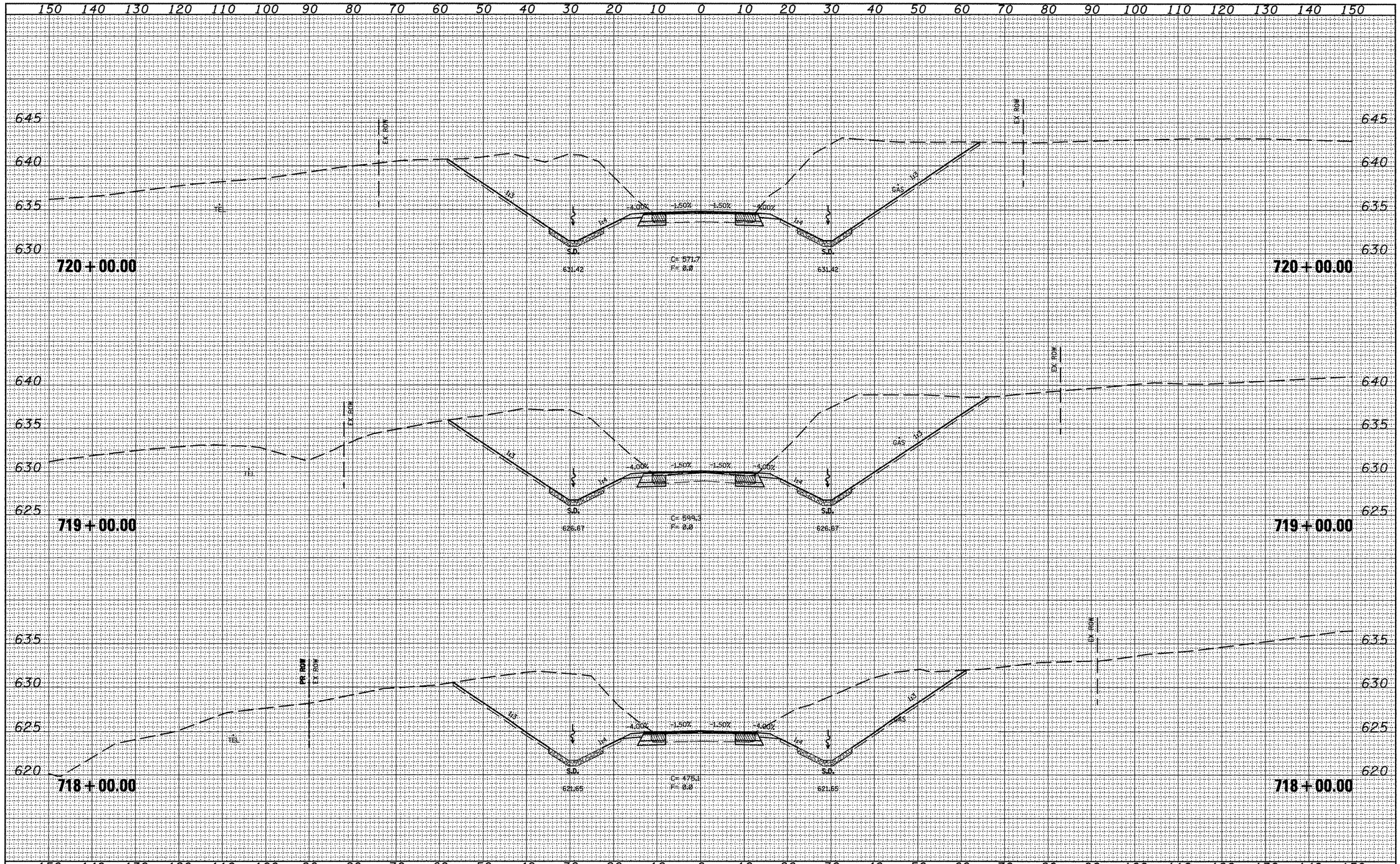

FINAL SURVEY	BY	DATE
SURVEYED		
PLOTTED		
TEMPLATE		
AREAS		
AREAS CHECKED		
NOTE BOOK		
NO.		

ORIGINAL SURVEY	BY	DATE
SURVEYED		
PLOTTED		
TEMPLATE		
AREAS		
AREAS CHECKED		
NOTE BOOK		
NO.		

FILE NAME = xsec_sheet.dgn	USER NAME = jochumsjg	DESIGNED -	REVISED -
		DRAWN -	REVISED -
	PLOT SCALE = 20.0000 ' / IN.	CHECKED -	REVISED -
	PLOT DATE = 3/11/2010	DATE -	REVISED -

STATE OF ILLINOIS
DEPARTMENT OF TRANSPORTATION

CROSS SECTIONS

SCALE: | SHEET NO. OF SHEETS | STA. 718+00.00 TO STA. 720+00.00

F.AÆAP RTE.	SECTION	COUNTY	TOTAL SHEETS	SHEET NO.
317	16W-2,RS-4;17W-1,RS-3	FULTON	240	179

CONTRACT NO. 88703

ILLINOIS FED. AID PROJECT

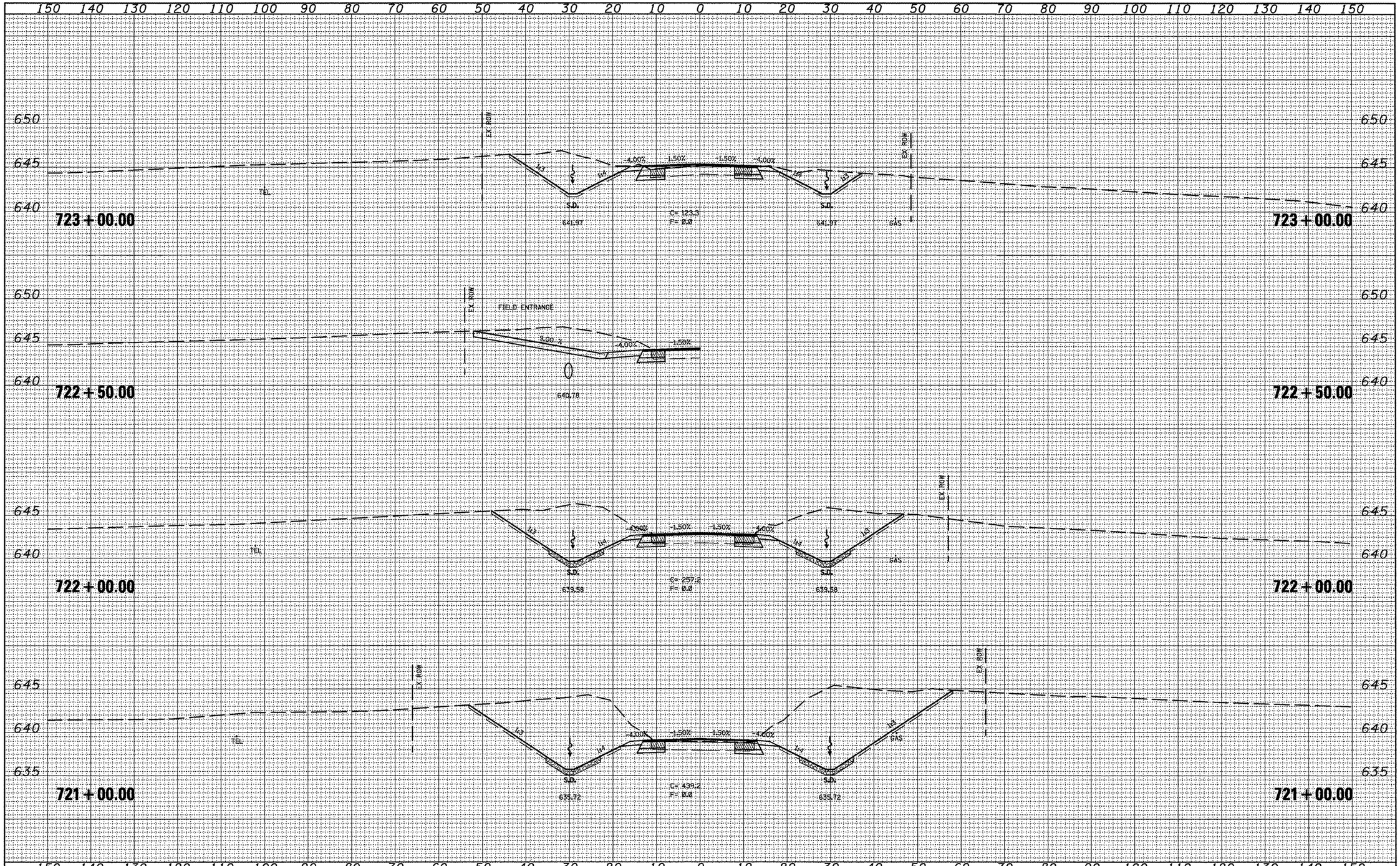

FILE NAME = xsec_sheet.dgn	USER NAME = jochums.jg	DESIGNED -	REVISED -
		DRAWN -	REVISED -
	PLOT SCALE = 20.0000 ' / IN.	CHECKED -	REVISED -
	PLOT DATE = 3/12/2010	DATE -	REVISED -

STATE OF ILLINOIS
DEPARTMENT OF TRANSPORTATION

CROSS SECTIONS

SCALE: | SHEET NO. OF SHEETS | STA. 721+00.00 TO STA. 723+00.00

F.A.P. RTE.	SECTION	COUNTY	TOTAL SHEETS	SHEET NO.
317	16W-2,RS-4;17W-1,RS-3	FULTON	240	180

CONTRACT NO. 88703

ILLINOIS FED. AID PROJECT

FINAL SURVEY	SURVEYED	BY	DATE
NOTE BOOK	PLOTTED		
	TOPOGRAPHY		
NO.	AREAS		
	AREAS CHECKED		

ORIGINAL SURVEY	SURVEYED	BY	DATE
NOTE BOOK	PLOTTED		
	TOPOGRAPHY		
NO.	AREAS		
	AREAS CHECKED		

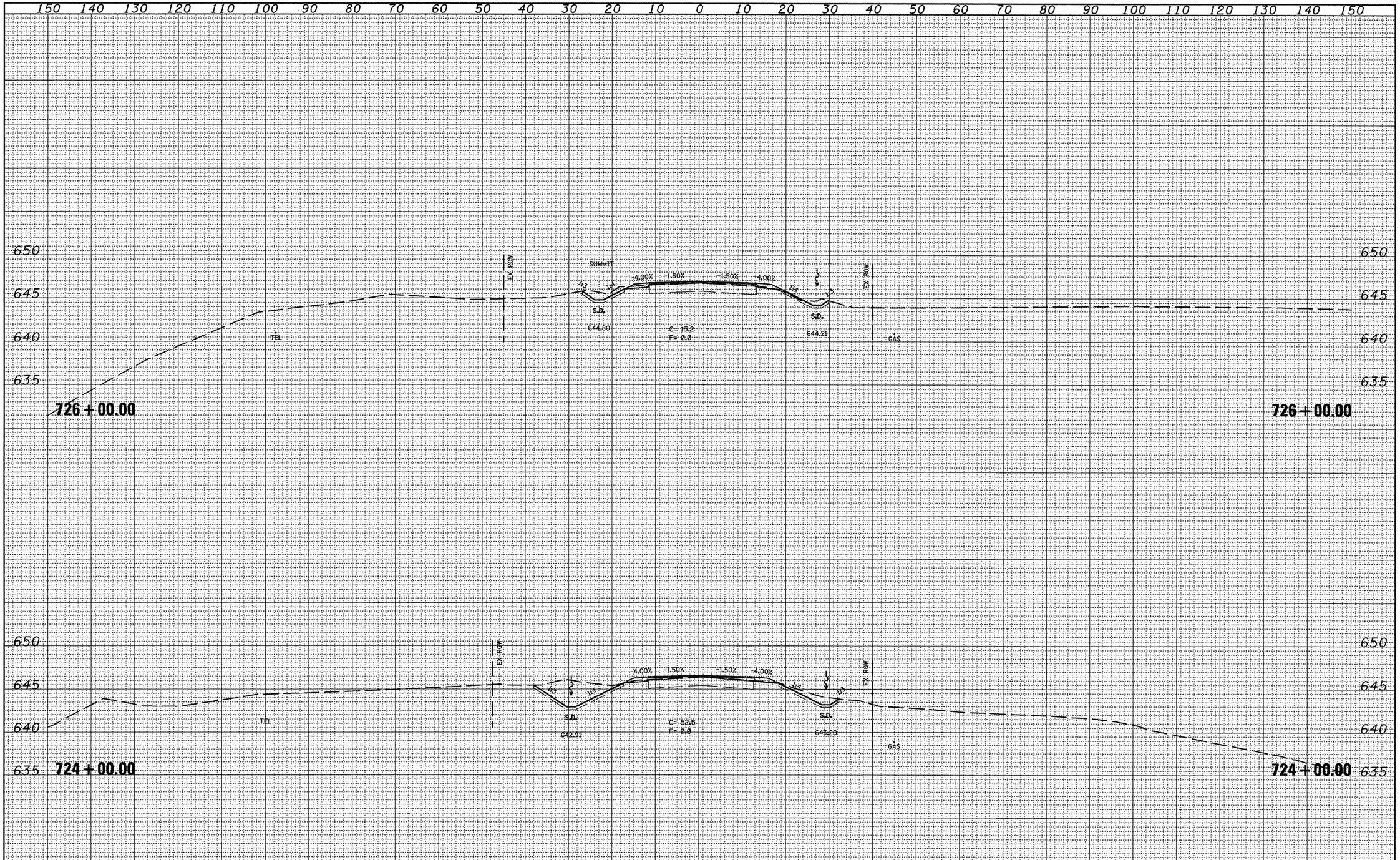

FINAL SURVEY	BY	DATE
SURVEYED		
PLOTTED		
SUBGRADE		
AREAS		
AREAS CHECKED		
NOTE BOOK NO.		

ORIGINAL SURVEY	BY	DATE
SURVEYED		
PLOTTED		
SUBGRADE		
AREAS		
AREAS CHECKED		
NOTE BOOK NO.		

FILE NAME = xsec_sheet.dgn	USER NAME = jochumsjg	DESIGNED -	REVISED -
		DRAWN -	REVISED -
	PLOT SCALE = 20.0000 ' / IN.	CHECKED -	REVISED -
	PLOT DATE = 3/11/2010	DATE -	REVISED -

STATE OF ILLINOIS
DEPARTMENT OF TRANSPORTATION

CROSS SECTIONS

SCALE: | SHEET NO. OF SHEETS | STA. 724+00.00 TO STA. 726+00.00

F.A.P. RTE.	SECTION	COUNTY	TOTAL SHEETS	SHEET NO.
317	16W-2,RS-4;17W-1,RS-3	FULTON	240	181

CONTRACT NO. 88703

ILLINOIS FED. AID PROJECT

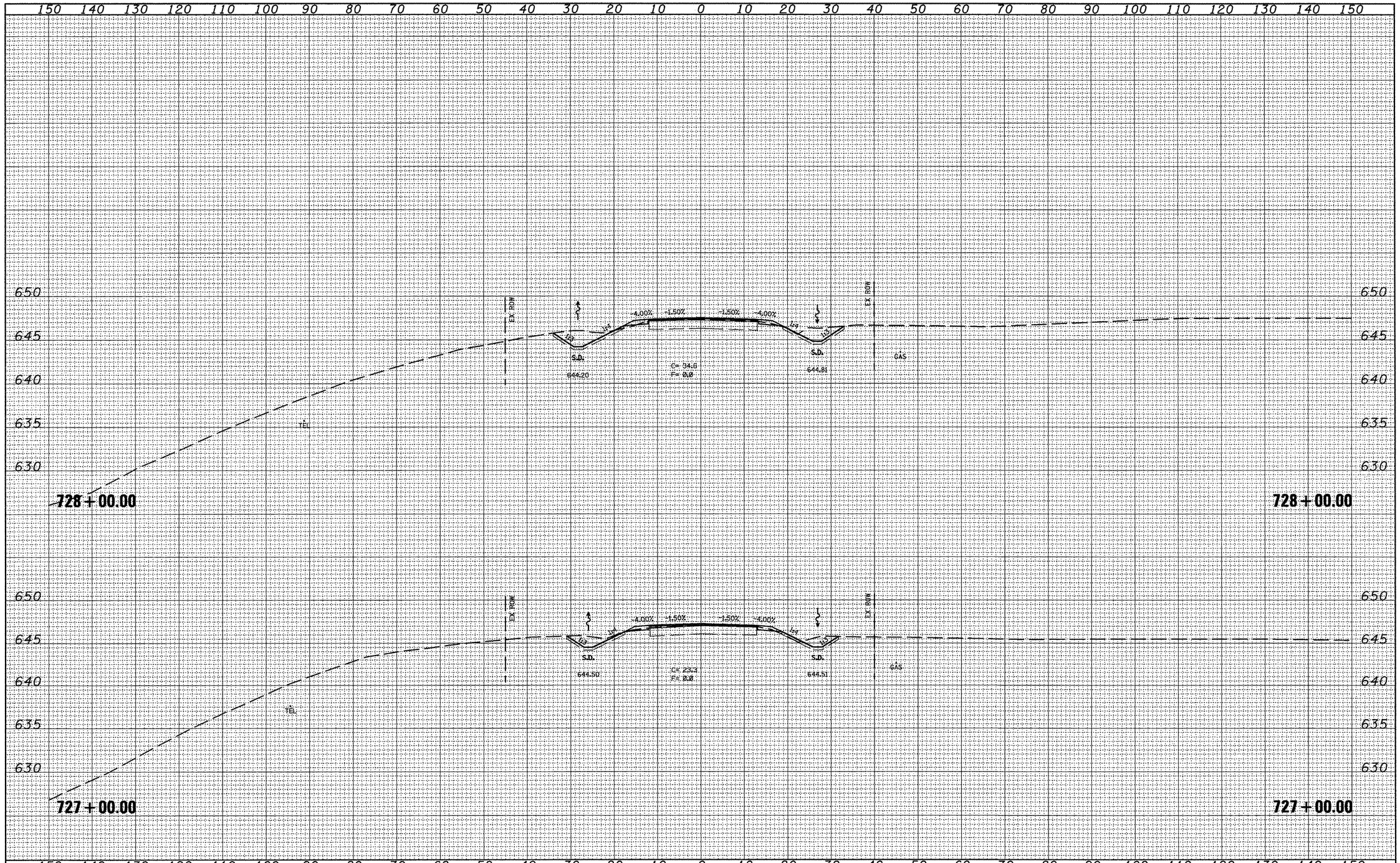

FINAL SURVEY		BY	DATE
NOTE BOOK	SURVEYED		
	PLOTTED		
	TEMPLATE		
	AREAS		
NO.	AREAS CHECKED		

ORIGINAL SURVEY		BY	DATE
NOTE BOOK	SURVEYED		
	PLOTTED		
	TEMPLATE		
	AREAS		
NO.	AREAS CHECKED		

FILE NAME = xsec_sheet.dgn	USER NAME = jochums,jg	DESIGNED -	REVISED -
		DRAWN -	REVISED -
	PLOT SCALE = 20.0000 ' / IN.	CHECKED -	REVISED -
	PLOT DATE = 3/11/2010	DATE -	REVISED -

STATE OF ILLINOIS
DEPARTMENT OF TRANSPORTATION

CROSS SECTIONS

SCALE: | SHEET NO. OF SHEETS | STA. 727+00.00 TO STA. 728+00.00

F.A.P. RTE.	SECTION	COUNTY	TOTAL SHEETS	SHEET NO.
317	16W-2,RS-4;17W-1,RS-3	FULTON	240	182

CONTRACT NO. 88703

ILLINOIS FED. AID PROJECT

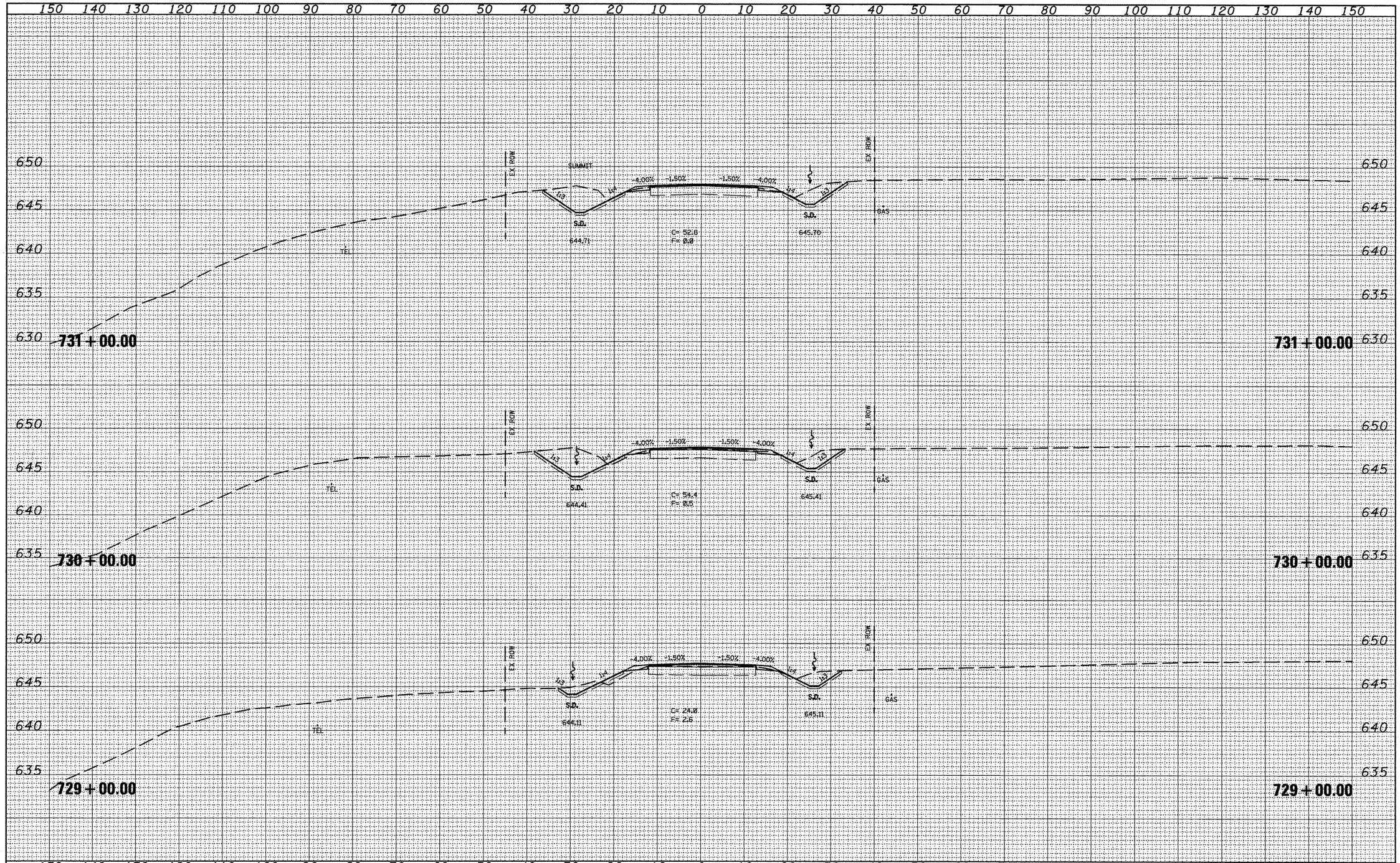

FINAL SURVEY	BY	DATE
SURVEYED		
PLOTTED		
TEMPLATE		
AREAS		
AREAS CHECKED		
NOTE BOOK		
NO.		

ORIGINAL SURVEY	BY	DATE
SURVEYED		
PLOTTED		
TEMPLATE		
AREAS		
AREAS CHECKED		
NOTE BOOK		
NO.		

FILE NAME = xsec_sheet.dgn	USER NAME = jochumsjg	DESIGNED -	REVISED -
		DRAWN -	REVISED -
	PLOT SCALE = 20.0000 ' / IN.	CHECKED -	REVISED -
	PLOT DATE = 3/11/2010	DATE -	REVISED -

STATE OF ILLINOIS
DEPARTMENT OF TRANSPORTATION

CROSS SECTIONS

SCALE: | SHEET NO. OF SHEETS | STA. 729+00.00 TO STA. 731+00.00

F.A.P. RTE.	SECTION	COUNTY	TOTAL SHEETS	SHEET NO.
317	16W-2,RS-4;17W-1,RS-3	FULTON	240	183

CONTRACT NO. 88703

ILLINOIS | FED. AID PROJECT

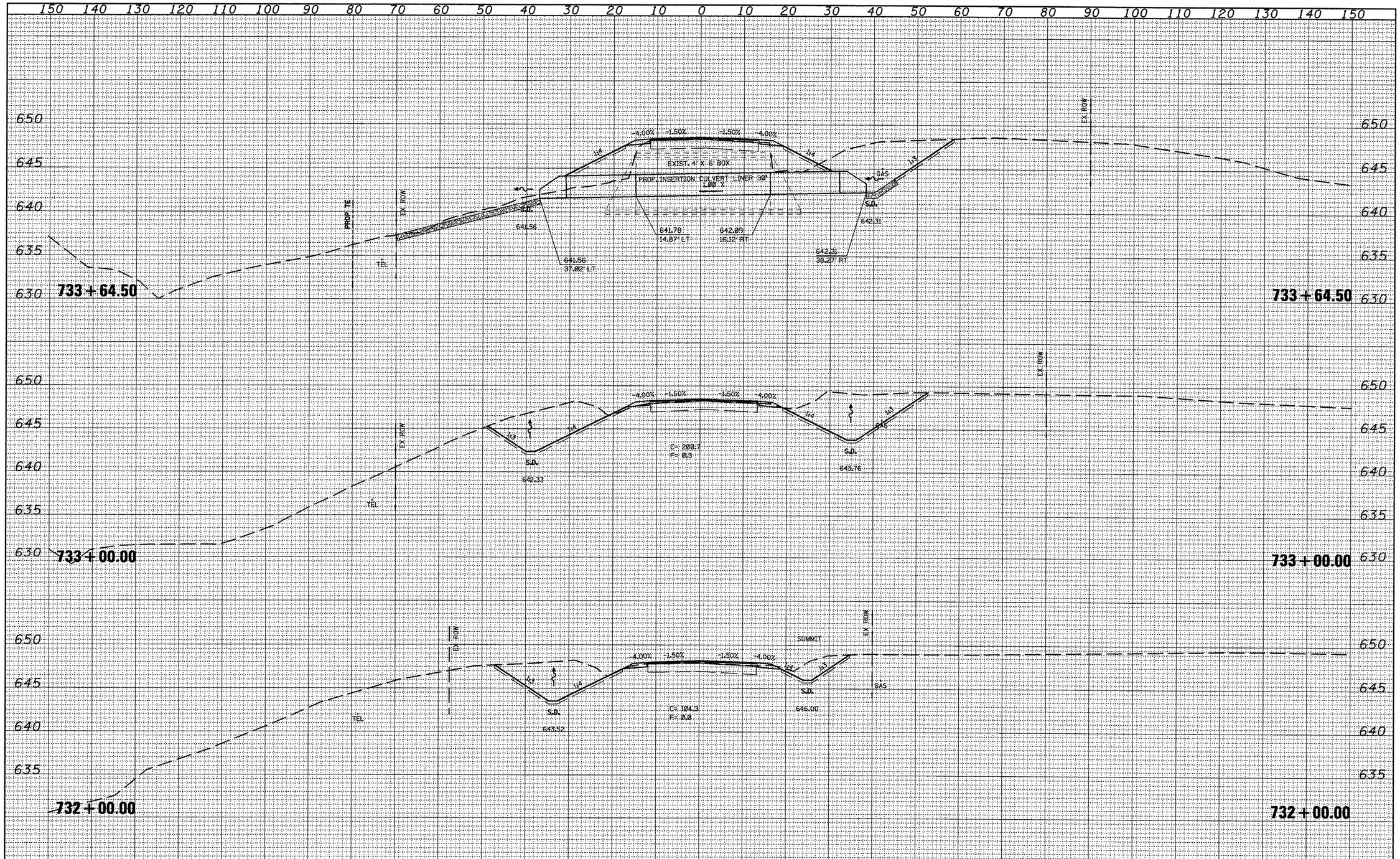

FILE NAME = xsec_sheet.dgn	USER NAME = jochums,jg	DESIGNED -	REVISED -
		DRAWN -	REVISED -
	PLOT SCALE = 20.0000 ' / IN.	CHECKED -	REVISED -
	PLOT DATE = 3/11/2010	DATE -	REVISED -

STATE OF ILLINOIS
DEPARTMENT OF TRANSPORTATION

CROSS SECTIONS

SCALE: | SHEET NO. OF SHEETS | STA. 732+00.00 TO STA. 733+64.50

F.A.P. RTE.	SECTION	COUNTY	TOTAL SHEETS	SHEET NO.
317	16W-2,RS-4;17W-1,RS-3	FULTON	240	184

CONTRACT NO. 88703

ILLINOIS | FED. AID PROJECT

FINAL SURVEY		BY	DATE
NOTE BOOK	SURVEYED		
	PLOTTED		
	TEMPLATE		
	AREAS		
NO.	AREAS CHECKED		

ORIGINAL SURVEY		
NOTE BOOK	SURVEYED	
	PLOTTED	
	TEMPLATE	
	AREAS	
NO.	AREAS CHECKED	

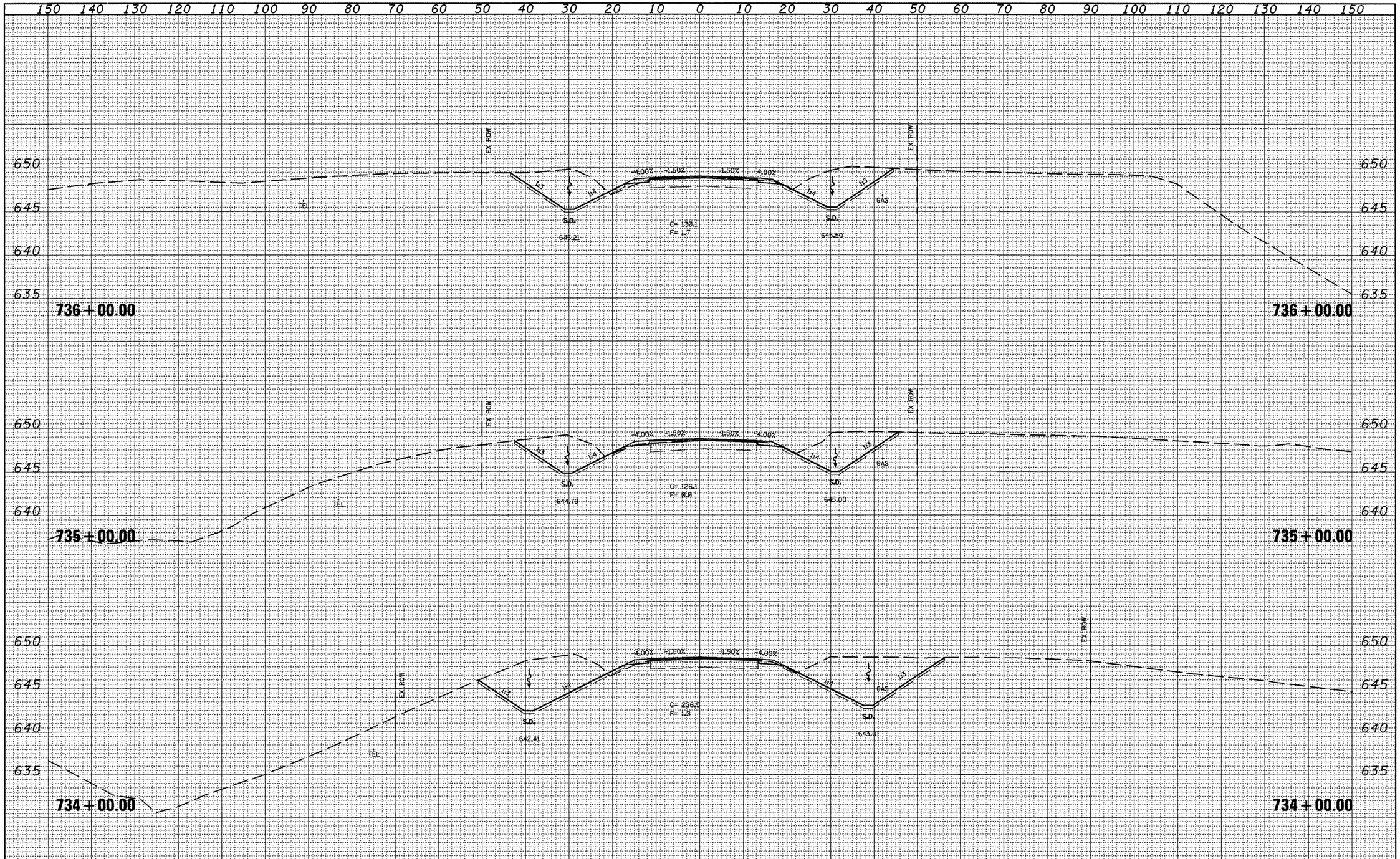

FILE NAME = xsec_sheet.dgn	USER NAME = jochums,jg	DESIGNED -	REVISED -
		DRAWN -	REVISED -
	PLOT SCALE = 20.0000 ' / IN.	CHECKED -	REVISED -
	PLOT DATE = 3/11/2010	DATE -	REVISED -

STATE OF ILLINOIS
DEPARTMENT OF TRANSPORTATION

CROSS SECTIONS

SCALE: | SHEET NO. OF SHEETS | STA. 734+00.00 TO STA. 736+00.00

F.AEAP RTE.	SECTION	COUNTY	TOTAL SHEETS	SHEET NO.
317	16W-2,RS-4;17W-1,RS-3	FULTON	240	185

CONTRACT NO. 88703

ILLINOIS FED. AID PROJECT

ORIGINAL SURVEY		BY	DATE
NOTE BOOK	SURVEYED		
	PLOTTED		
	VERIFIED		
	AREAS		
NO.	AREAS CHECKED		

FINAL SURVEY		BY	DATE
NOTE BOOK	SURVEYED		
	PLOTTED		
	VERIFIED		
	AREAS		
NO.	AREAS CHECKED		

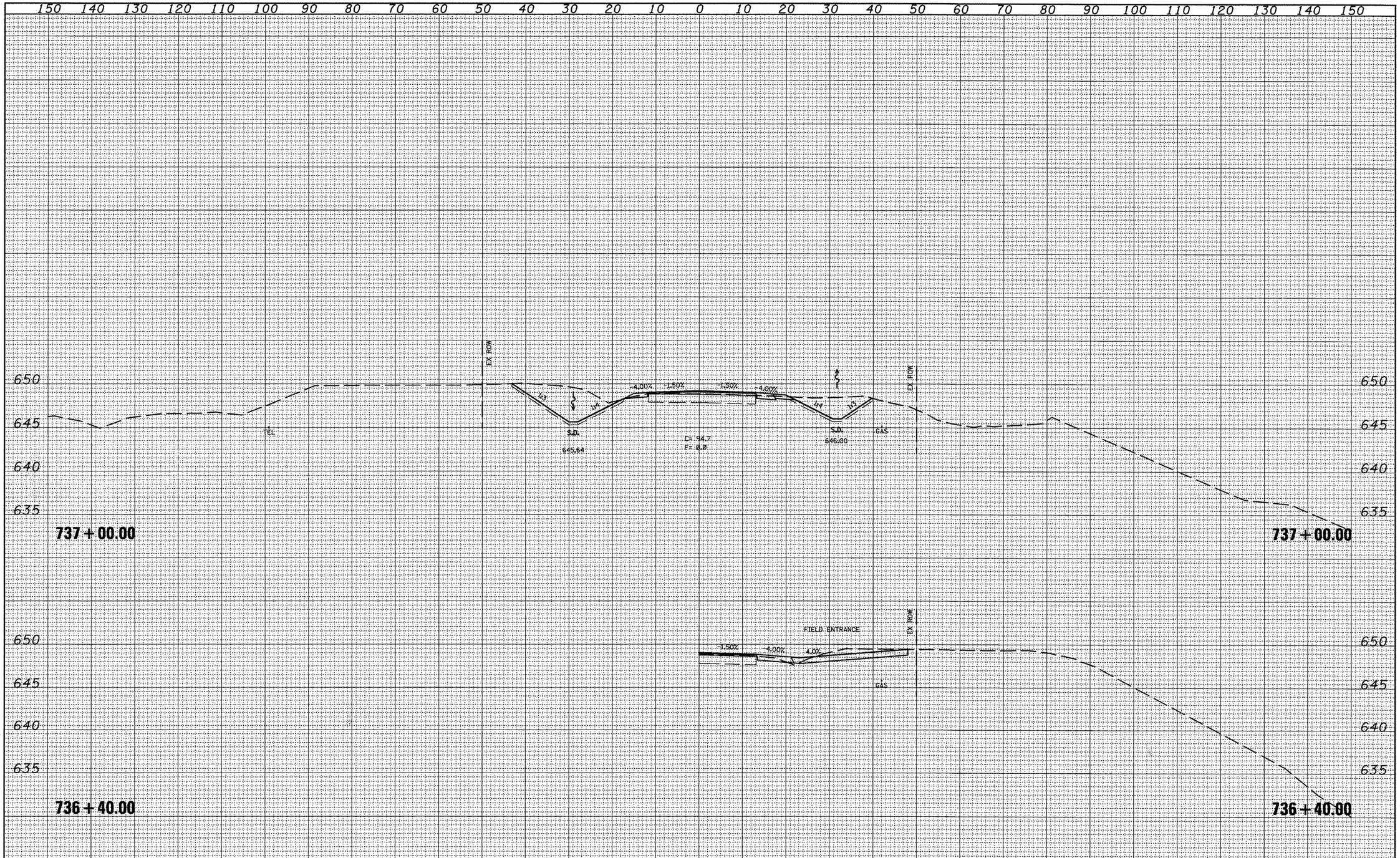

FILE NAME = xsec_sheet.dgn	USER NAME = jochums.jg	DESIGNED -	REVISED -
		DRAWN -	REVISED -
	PLOT SCALE = 20.0000 ' / IN.	CHECKED -	REVISED -
	PLOT DATE = 3/11/2010	DATE -	REVISED -

STATE OF ILLINOIS
DEPARTMENT OF TRANSPORTATION

CROSS SECTIONS

SCALE: | SHEET NO. OF SHEETS | STA. 736+40.00 TO STA. 738+00.00

F.A.P. RTE.	SECTION	COUNTY	TOTAL SHEETS	SHEET NO.
317	16W-2,RS-4;17W-1,RS-3	FULTON	240	186

CONTRACT NO. 88703

ILLINOIS FED. AID PROJECT

FINAL SURVEY		BY	DATE
	SURVEYED		
	PLOTTED		
NOTE BOOK	TEMPLATE		
	AREAS		
NO.	AREAS CHECKED		

ORIGINAL SURVEY		BY	DATE
	SURVEYED		
	PLOTTED		
NOTE BOOK	TEMPLATE		
	AREAS		
NO.	AREAS CHECKED		

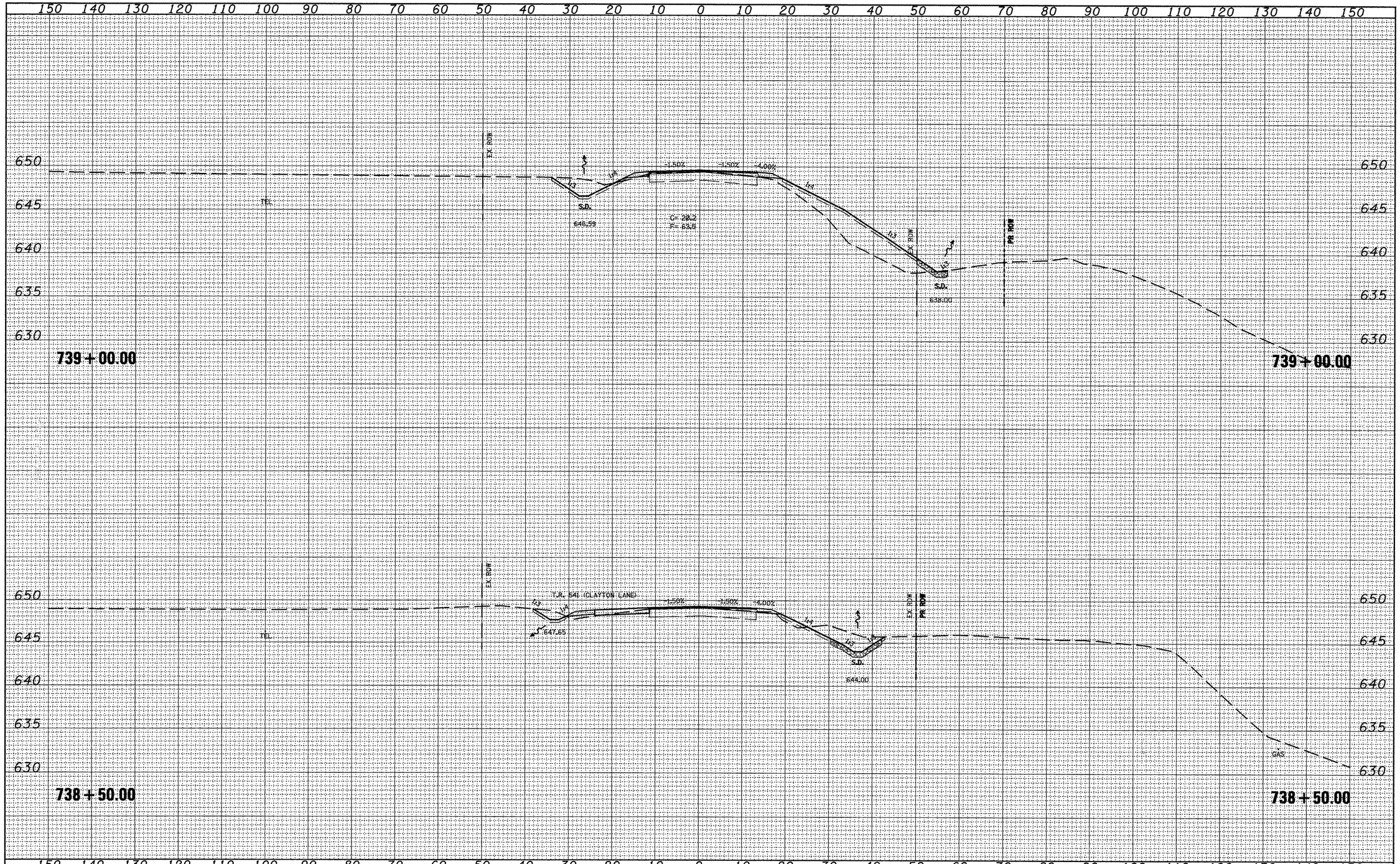

FILE NAME = xsec_sheet.dgn	USER NAME = jochums,jg	DESIGNED -	REVISED -
		DRAWN -	REVISED -
	PLOT SCALE = 20.0000 ' / IN.	CHECKED -	REVISED -
	PLOT DATE = 3/11/2010	DATE -	REVISED -

STATE OF ILLINOIS
DEPARTMENT OF TRANSPORTATION

CROSS SECTIONS

SCALE: | SHEET NO. OF SHEETS | STA. 738+50.00 TO STA. 739+00.00

F.A.AP. RTE.	SECTION	COUNTY	TOTAL SHEETS	SHEET NO.
317	16W-2,RS-4;17W-1,RS-3	FULTON	240	187

CONTRACT NO. 88703

ILLINOIS FED. AID PROJECT

FINAL SURVEY	SURVEYED	DATE
	PLOTTED	
	TEMPLATE	
NOTE BOOK	AREAS	
NO.	AREAS CHECKED	

ORIGINAL SURVEY	SURVEYED	DATE
	PLOTTED	
	TEMPLATE	
NOTE BOOK	AREAS	
NO.	AREAS CHECKED	

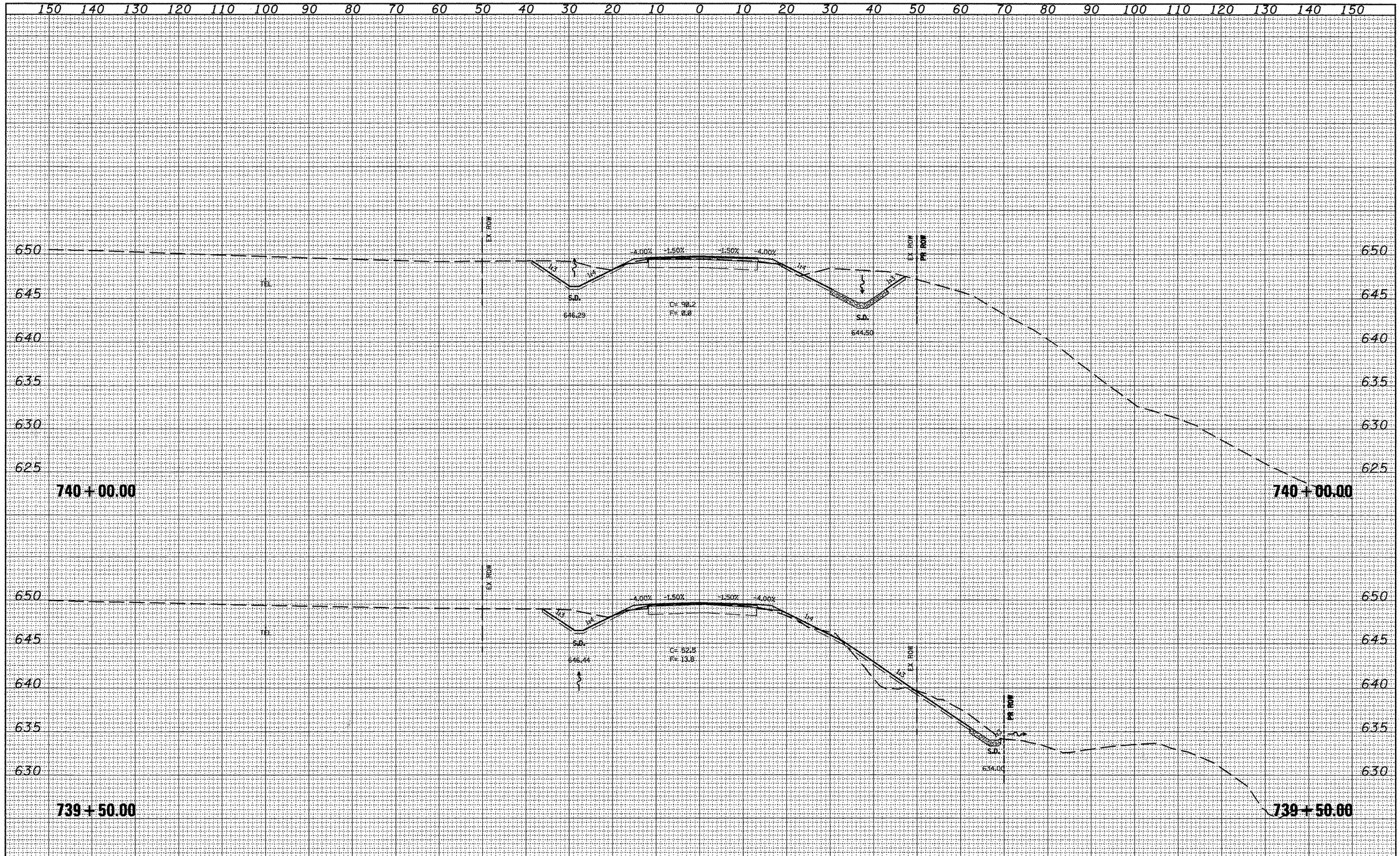

FINAL SURVEY	SURVEYED / PLOTTED / TEMPLATE / AREAS / AREAS CHECKED	BY	DATE
NOTE BOOK NO.			

ORIGINAL SURVEY	SURVEYED / PLOTTED / TEMPLATE / AREAS / AREAS CHECKED	BY	DATE
NOTE BOOK NO.			

FILE NAME = xsec_sheet.dgn	USER NAME = jochumsjg	DESIGNED -	REVISED -
		DRAWN -	REVISED -
	PLOT SCALE = 20.0000 ' / IN.	CHECKED -	REVISED -
	PLOT DATE = 3/11/2010	DATE -	REVISED -

STATE OF ILLINOIS
DEPARTMENT OF TRANSPORTATION

CROSS SECTIONS

SCALE: | SHEET NO. OF SHEETS | STA. 739+50.00 TO STA. 740+00.00

F.A.P. RTE.	SECTION	COUNTY	TOTAL SHEETS	SHEET NO.
317	16W-2,RS-4;17W-1,RS-3	FULTON	240	188

CONTRACT NO. 88703

ILLINOIS FED. AID PROJECT

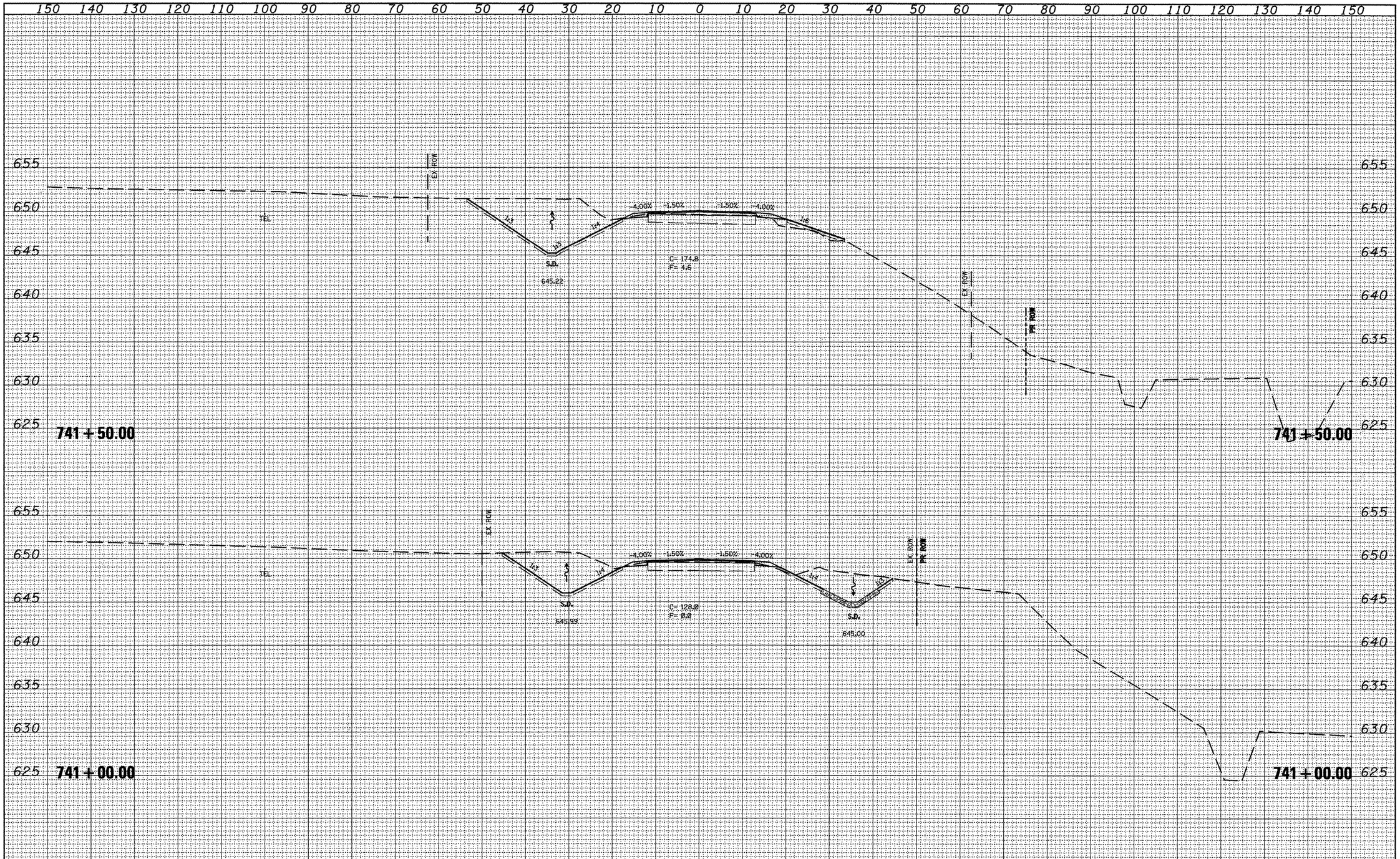

FINAL SURVEY	SURVEYED / PLOTTED / TEMPLATE / AREAS / AREAS CHECKED	BY	DATE
NOTE BOOK NO.			

ORIGINAL SURVEY	SURVEYED / PLOTTED / TEMPLATE / AREAS / AREAS CHECKED	BY	DATE
NOTE BOOK NO.			

FILE NAME = xsec_sheet.dgn	USER NAME = jschumajg	DESIGNED -	REVISED -
		DRAWN -	REVISED -
	PLOT SCALE = 20.0000 ' / IN.	CHECKED -	REVISED -
	PLOT DATE = 3/11/2010	DATE -	REVISED -

STATE OF ILLINOIS
DEPARTMENT OF TRANSPORTATION

CROSS SECTIONS

SCALE: | SHEET NO. OF SHEETS | STA. 741+00.00 TO STA. 741+50.00

F.A.&AP. RTE.	SECTION	COUNTY	TOTAL SHEETS	SHEET NO.
317	16W-2,RS-4;17W-1,RS-3	FULTON	246	189

CONTRACT NO. 88703

ILLINOIS FED. AID PROJECT

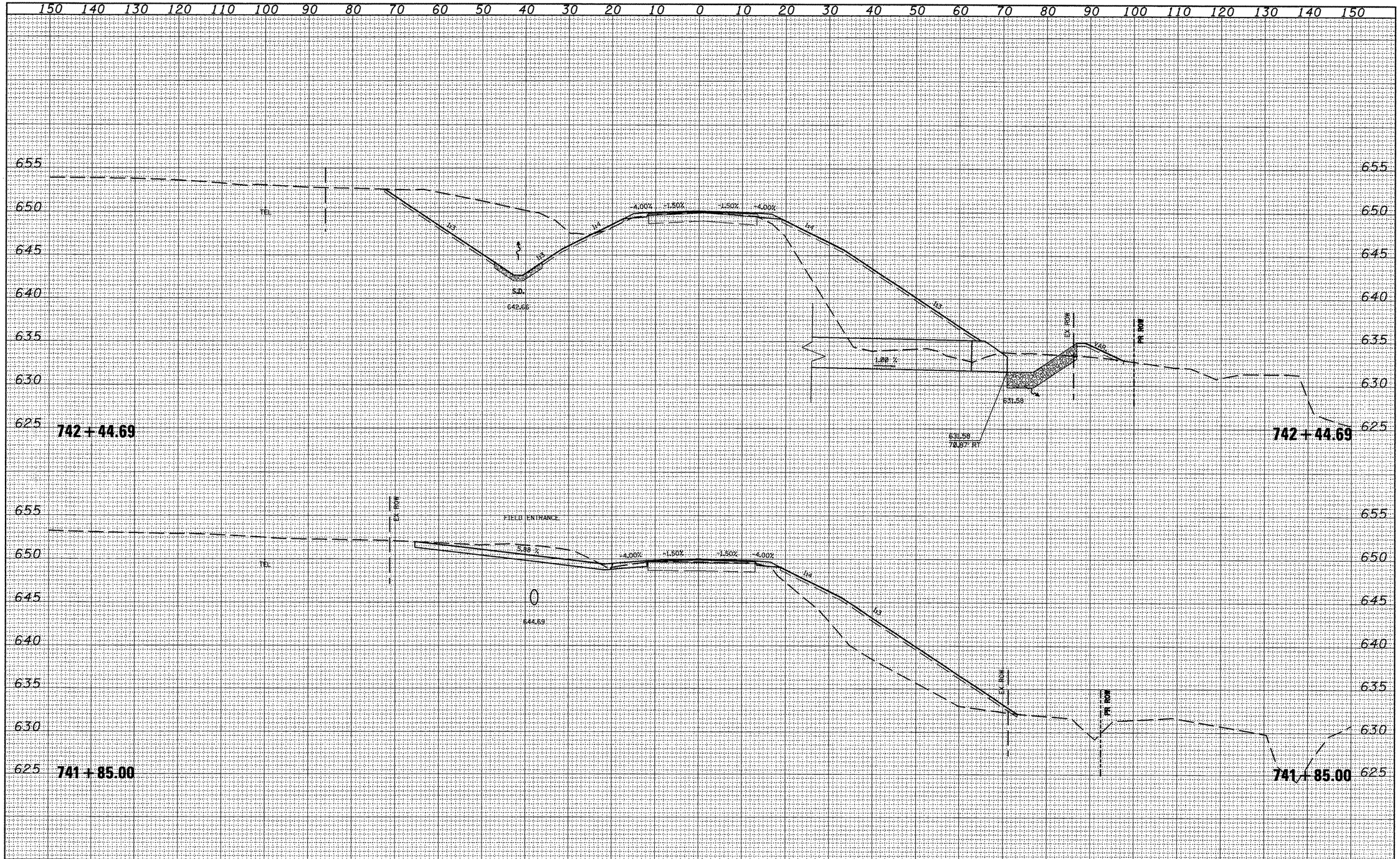

FINAL SURVEY	BY	DATE
NOTE BOOK	SURVEYED	
	PLOTTED	
	TEMPLATE	
	AREAS	
NO.	AREAS CHECKED	

ORIGINAL SURVEY	BY	DATE
NOTE BOOK	SURVEYED	
	PLOTTED	
	TEMPLATE	
	AREAS	
NO.	AREAS CHECKED	

FILE NAME = xsec_sheet.dgn	USER NAME = jochums.jg	DESIGNED -	REVISED -
		DRAWN -	REVISED -
	PLOT SCALE = 20.0000 ' / IN.	CHECKED -	REVISED -
	PLOT DATE = 3/11/2010	DATE -	REVISED -

STATE OF ILLINOIS
DEPARTMENT OF TRANSPORTATION

CROSS SECTIONS

SCALE: | SHEET NO. OF SHEETS | STA. 741+85.00 TO STA. 742+44.69

F.A.P. RTE.	SECTION	COUNTY	TOTAL SHEETS	SHEET NO.
317	16W-2,RS-4;17W-1,RS-3	FULTON	240	190

CONTRACT NO. 88703

ILLINOIS FED. AID PROJECT

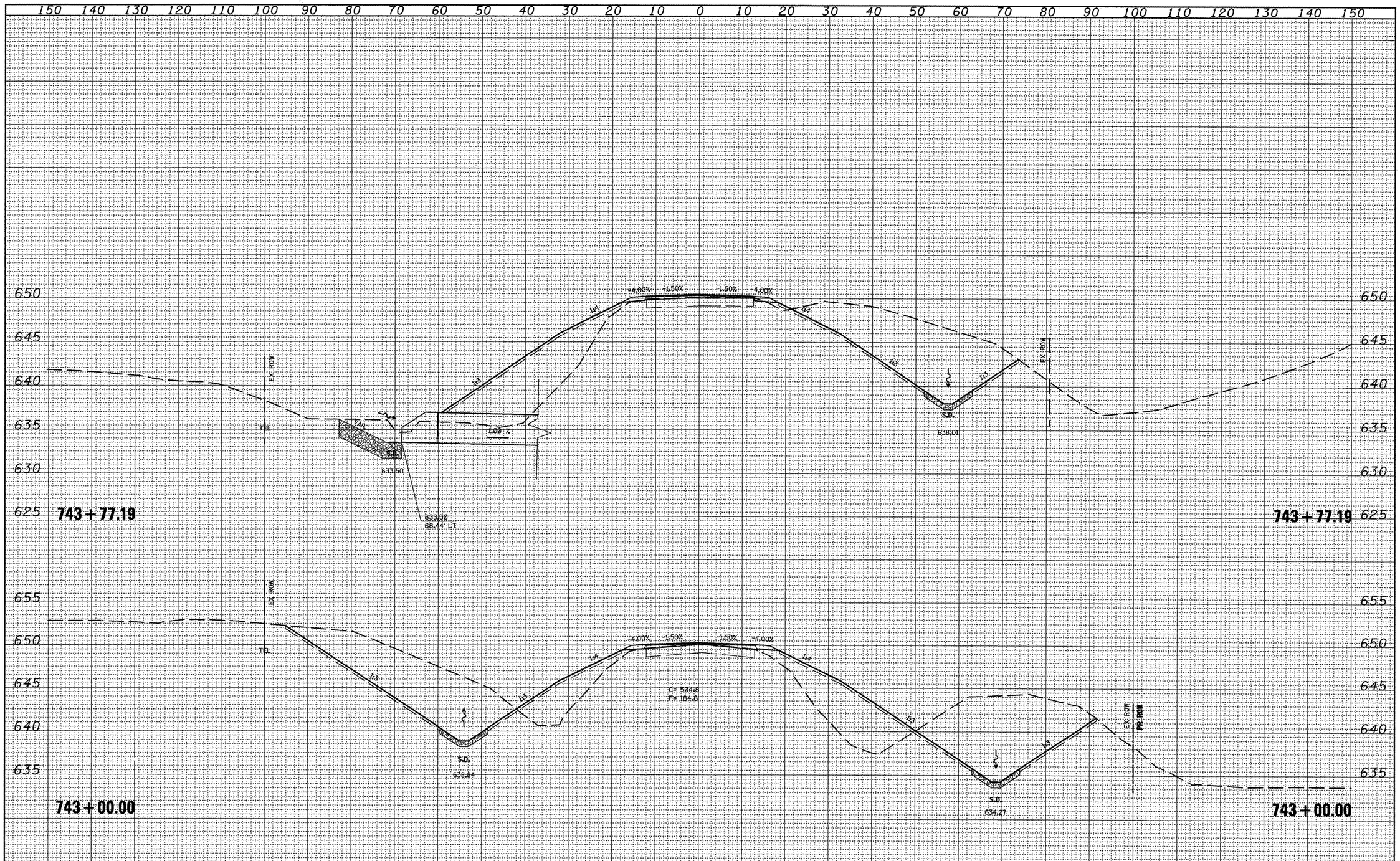

FILE NAME = xsec_sheet.dgn	USER NAME = jochums,jg	DESIGNED -	REVISED -
		DRAWN -	REVISED -
	PLOT SCALE = 20.0000 ' / IN.	CHECKED -	REVISED -
	PLOT DATE = 3/11/2010	DATE -	REVISED -

STATE OF ILLINOIS
DEPARTMENT OF TRANSPORTATION

CROSS SECTIONS

SCALE: | SHEET NO. OF SHEETS | STA. 743+00.00 TO STA. 743+77.19

F.A.P. RTE.	SECTION	COUNTY	TOTAL SHEETS	SHEET NO.
317	16W-2,RS-4;17W-1,RS-3	FULTON	240	191

CONTRACT NO. 88703

ILLINOIS | FED. AID PROJECT

FINAL SURVEY	SURVEYED		
	PLOTTED		
NOTE BOOK	TEMPLATE		
	AREAS		
NO.	AREAS CHECKED		

ORIGINAL SURVEY	SURVEYED		
	PLOTTED		
NOTE BOOK	TEMPLATE		
	AREAS		
NO.	AREAS CHECKED		

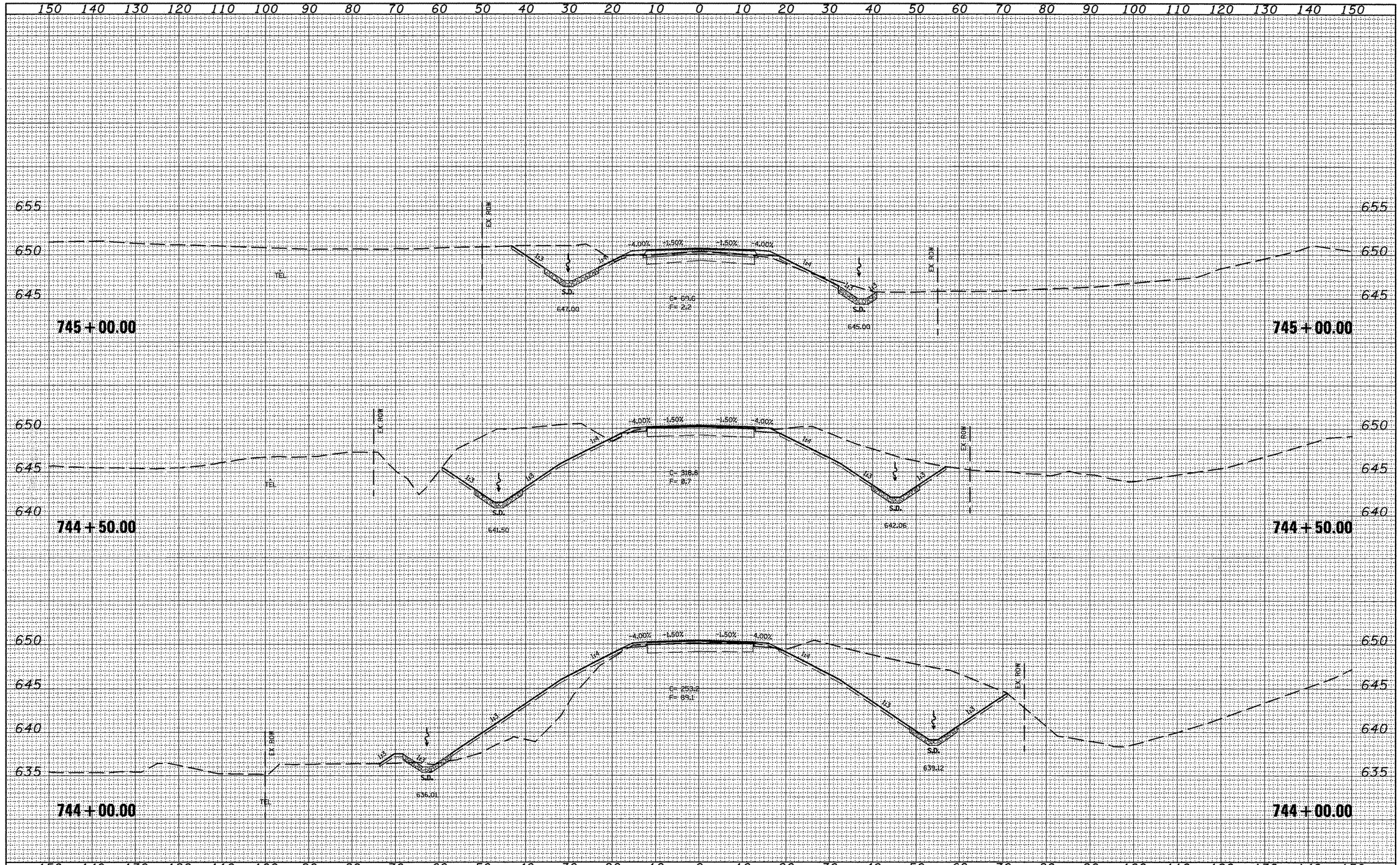

FILE NAME = xsec_sheet.dgn	USER NAME = jochumsjg	DESIGNED -	REVISED -
		DRAWN -	REVISED -
	PLOT SCALE = 20.0000 ' / IN.	CHECKED -	REVISED -
	PLOT DATE = 3/11/2010	DATE -	REVISED -

STATE OF ILLINOIS
DEPARTMENT OF TRANSPORTATION

CROSS SECTIONS

SCALE: | SHEET NO. OF SHEETS | STA. 744+00.00 TO STA. 745+00.00

F.A.P. RTE.	SECTION	COUNTY	TOTAL SHEETS	SHEET NO.
317	16W-2,RS-4;17W-1,RS-3	FULTON	240	192

CONTRACT NO. 88703

ILLINOIS FED. AID PROJECT

ORIGINAL SURVEY	SURVEYED	BY	DATE
	PLOTTED		
NOTE BOOK	TEMPLATE		
	AREAS		
NO.	AREAS CHECKED		

FINAL SURVEY	SURVEYED	BY	DATE
	PLOTTED		
NOTE BOOK	TEMPLATE		
	AREAS		
NO.	AREAS CHECKED		

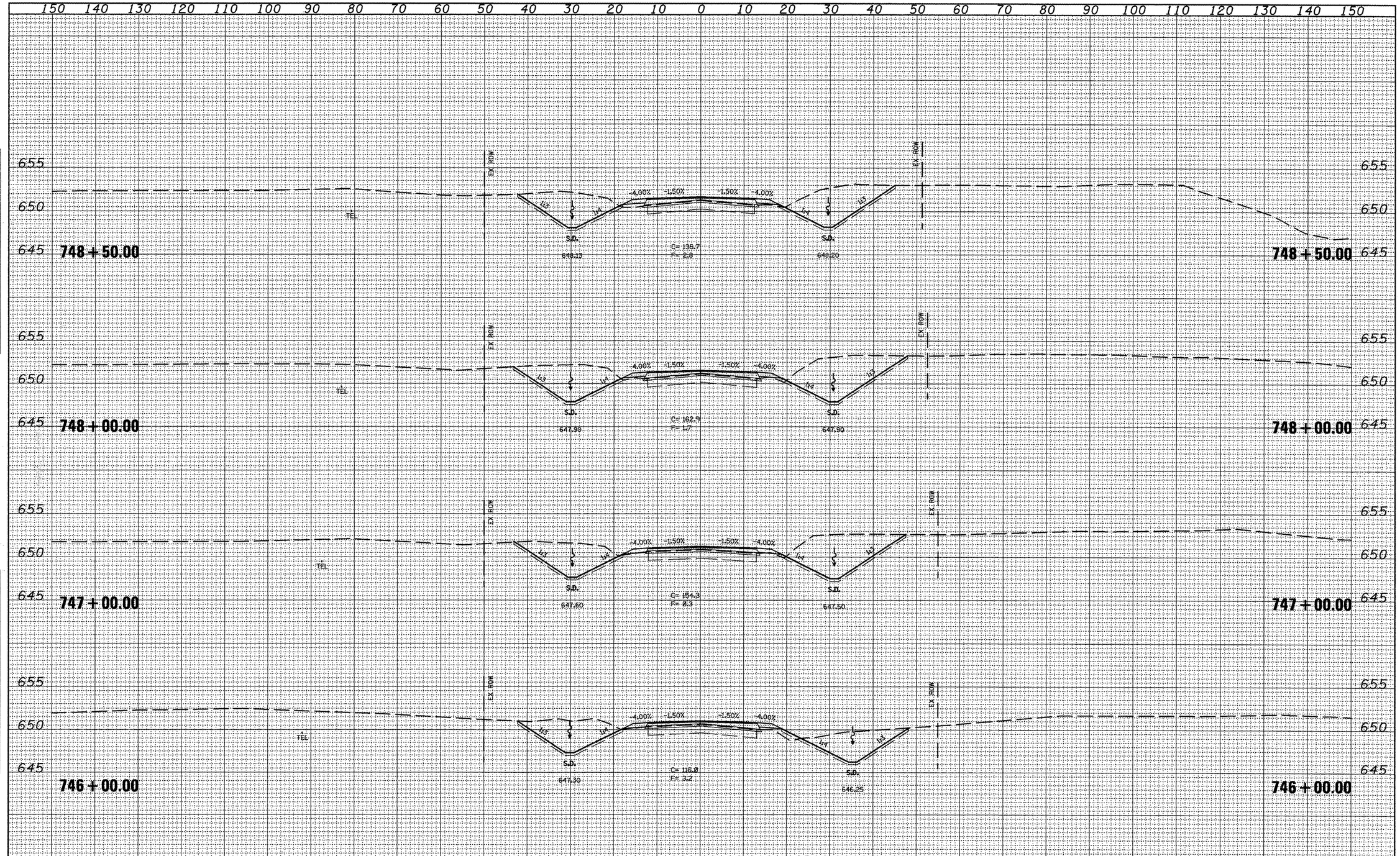

FILE NAME = xsec_sheet.dgn	USER NAME = jochums,jg	DESIGNED -	REVISED -
		DRAWN -	REVISED -
	PLOT SCALE = 20.0000 ' / IN.	CHECKED -	REVISED -
	PLOT DATE = 3/11/2010	DATE -	REVISED -

STATE OF ILLINOIS
DEPARTMENT OF TRANSPORTATION

CROSS SECTIONS

SCALE: | SHEET NO. OF SHEETS | STA. 746+00.00 TO STA. 748+50.00

F.A.P. RTE.	SECTION	COUNTY	TOTAL SHEETS	SHEET NO.
317	16W-2,RS-4;17W-1,RS-3	FULTON	240	193

CONTRACT NO. 88703

ILLINOIS FED. AID PROJECT

FINAL SURVEY	SURVEYED	BY	DATE
	PLOTTED		
	TEMPLATE		
NOTE BOOK	AREAS		
NO.	AREAS CHECKED		

ORIGINAL SURVEY	SURVEYED	BY	DATE
	PLOTTED		
	TEMPLATE		
NOTE BOOK	AREAS		
NO.	AREAS CHECKED		

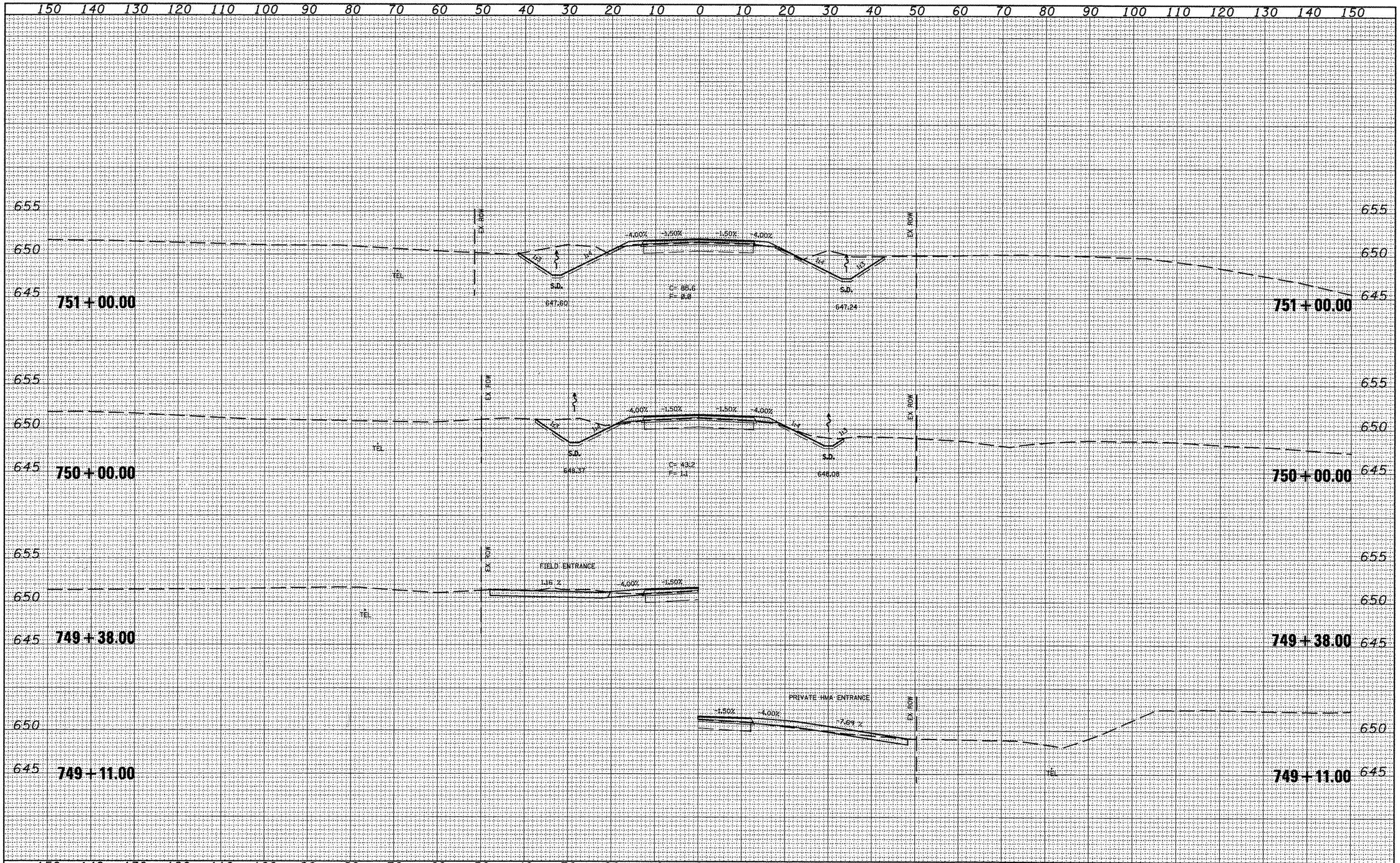

FILE NAME = xsec_sheet.dgn	USER NAME = jochumsjg	DESIGNED -	REVISED -
		DRAWN -	REVISED -
	PLOT SCALE = 20.0000 ' / IN.	CHECKED -	REVISED -
	PLOT DATE = 3/11/2010	DATE -	REVISED -

STATE OF ILLINOIS
DEPARTMENT OF TRANSPORTATION

CROSS SECTIONS

SCALE: | SHEET NO. OF SHEETS | STA. 749+11.00 TO STA. 751+00.00

F.A.P. RTE.	SECTION	COUNTY	TOTAL SHEETS	SHEET NO.
317	16W-2,RS-4;17W-1,RS-3	FULTON	240	194

CONTRACT NO. 88703

ILLINOIS FED. AID PROJECT

FINAL SURVEY — SURVEYED / PLOTTED / TEMPLATE / AREAS / AREAS CHECKED — NOTE BOOK NO. — BY — DATE

ORIGINAL SURVEY — SURVEYED / PLOTTED / TEMPLATE / AREAS / AREAS CHECKED — NOTE BOOK NO. — BY — DATE

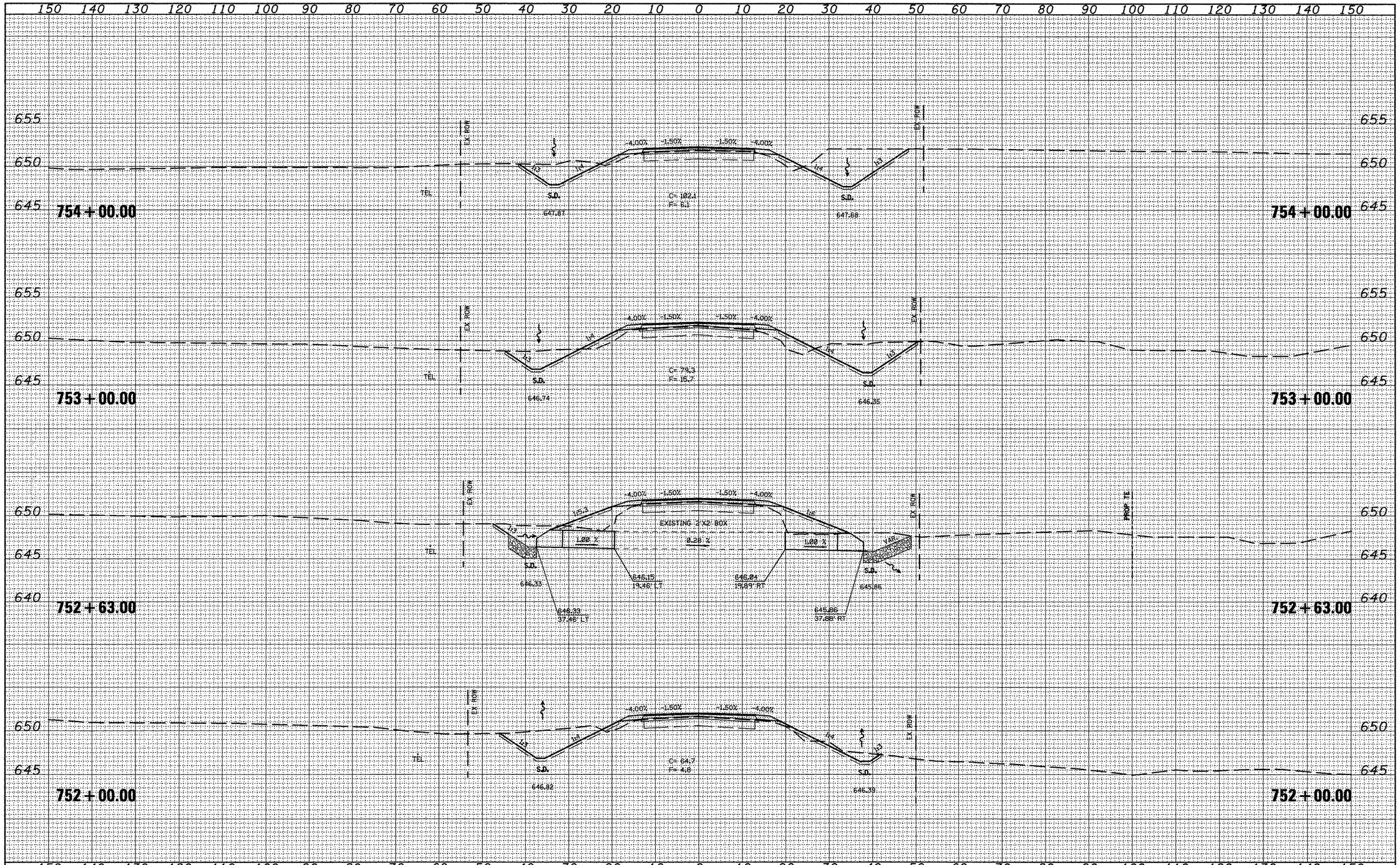

FILE NAME = xsec_sheet.dgn	USER NAME = jschums,jg	DESIGNED -	REVISED -
		DRAWN -	REVISED -
	PLOT SCALE = 20.0000 ' / IN.	CHECKED -	REVISED -
	PLOT DATE = 3/11/2010	DATE -	REVISED -

STATE OF ILLINOIS
DEPARTMENT OF TRANSPORTATION

CROSS SECTIONS

SCALE: | SHEET NO. OF SHEETS | STA. 752+00.00 TO STA. 754+00.00

F.A.P. RTE.	SECTION	COUNTY	TOTAL SHEETS	SHEET NO.
317	16W-2,RS-4;17W-1,RS-3	FULTON	240	195

CONTRACT NO. 88703

ILLINOIS FED. AID PROJECT

FINAL SURVEY		BY	DATE
NOTE BOOK	SURVEYED		
	PLOTTED		
	TEMPLATE		
	AREAS		
NO.	AREAS CHECKED		

ORIGINAL SURVEY		BY	DATE
NOTE BOOK	SURVEYED		
	PLOTTED		
	TEMPLATE		
	AREAS		
NO.	AREAS CHECKED		

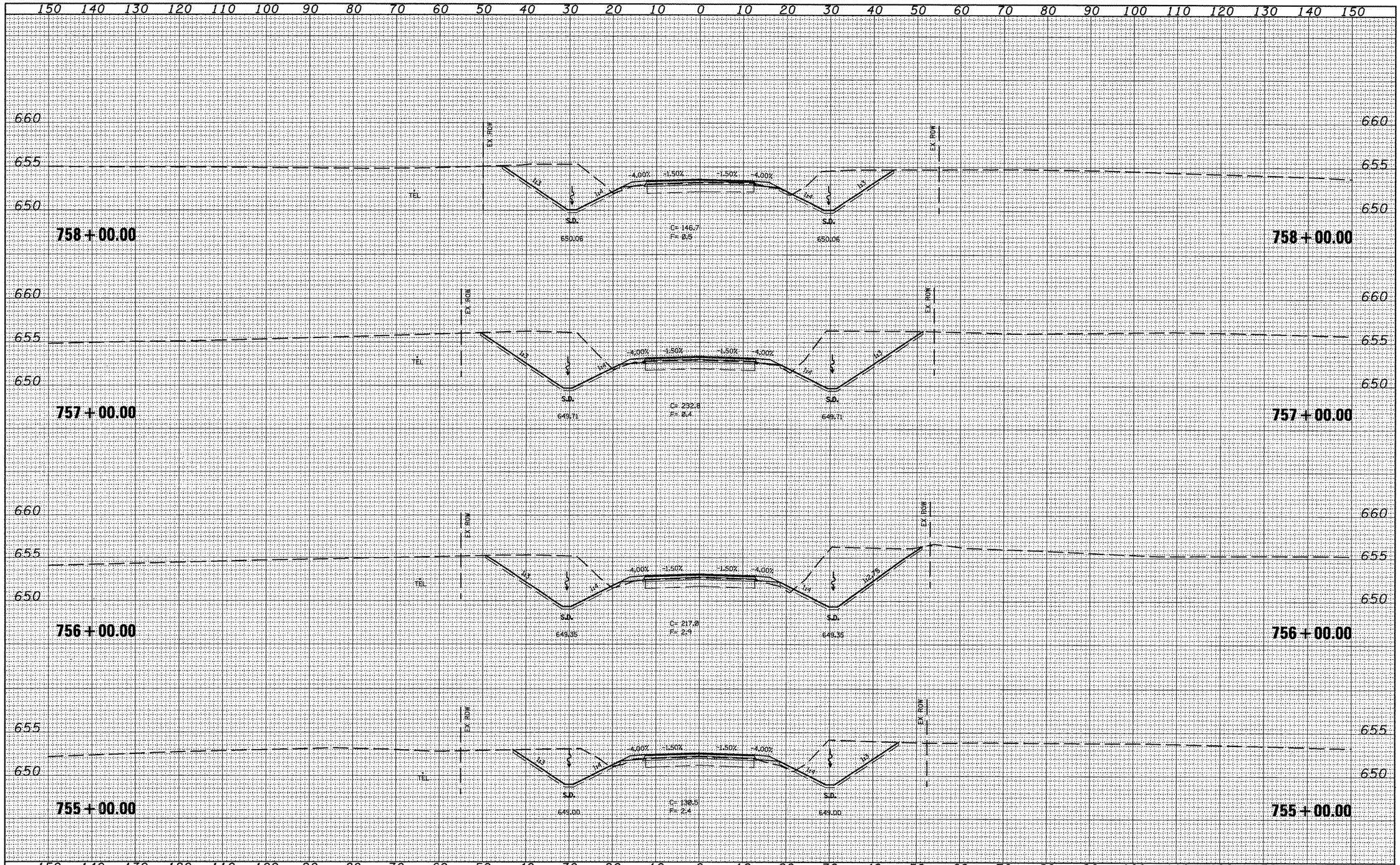

FILE NAME = xsec_sheet.dgn	USER NAME = jochums,jg	DESIGNED -	REVISED -
		DRAWN -	REVISED -
	PLOT SCALE = 20.0000 ' / IN.	CHECKED -	REVISED -
	PLOT DATE = 3/11/2010	DATE -	REVISED -

STATE OF ILLINOIS
DEPARTMENT OF TRANSPORTATION

CROSS SECTIONS

SCALE: | SHEET NO. OF SHEETS | STA. 755+00.00 TO STA. 758+00.00

F.A.P. RTE.	SECTION	COUNTY	TOTAL SHEETS	SHEET NO.
317	16W-2,RS-4;17W-1,RS-3	FULTON	240	196

CONTRACT NO. 88703

ILLINOIS FED. AID PROJECT

FINAL SURVEY — SURVEYED / PLOTTED / TEMPLATE / AREAS / AREAS CHECKED — NOTE BOOK NO. — BY — DATE

ORIGINAL SURVEY — SURVEYED / PLOTTED / TEMPLATE / AREAS / AREAS CHECKED — NOTE BOOK NO. — BY — DATE

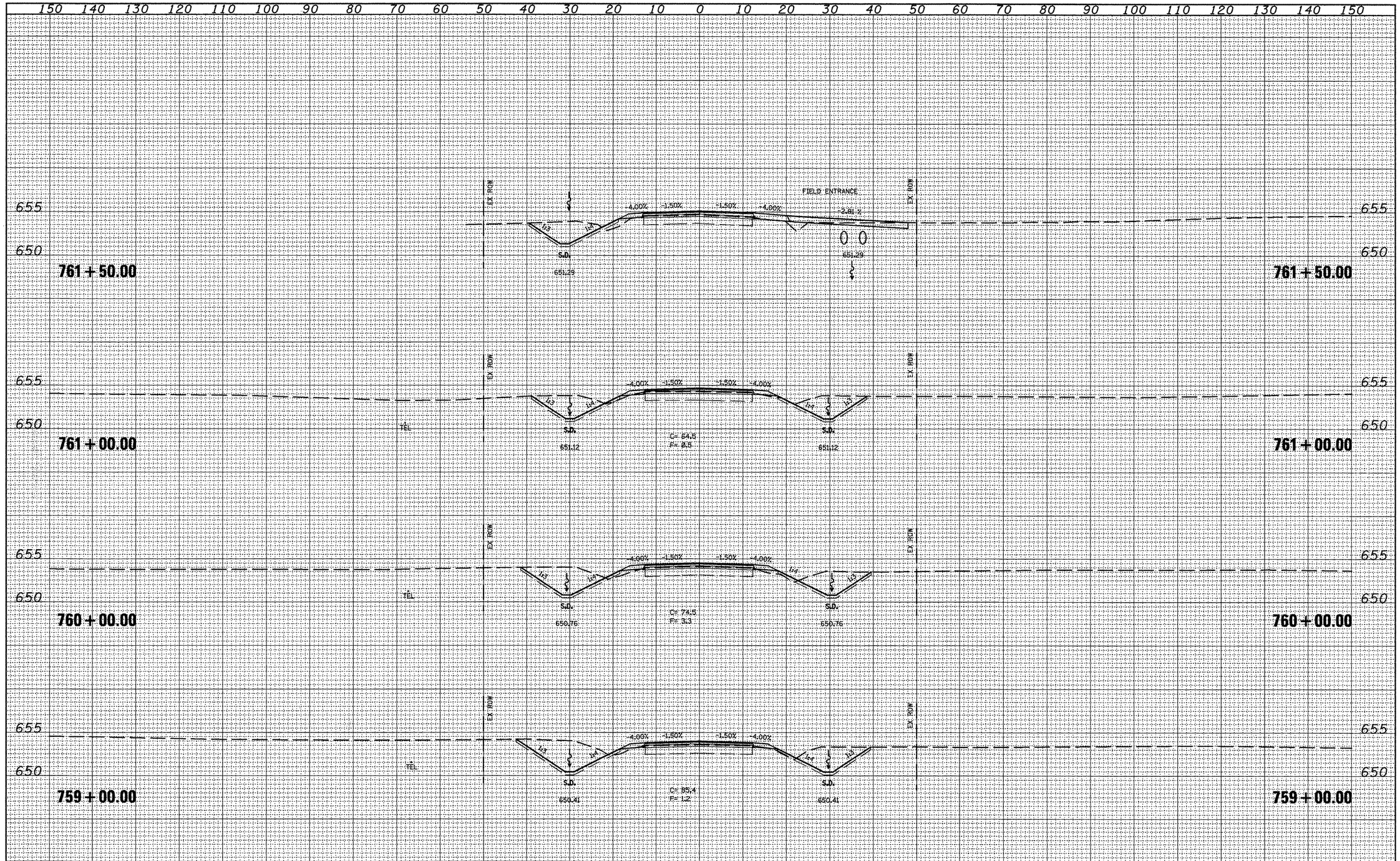

FILE NAME = xsec_sheet.dgn	USER NAME = jochums.jg	DESIGNED -	REVISED -
		DRAWN -	REVISED -
	PLOT SCALE = 20.0000 ' / IN.	CHECKED -	REVISED -
	PLOT DATE = 3/11/2010	DATE -	REVISED -

STATE OF ILLINOIS
DEPARTMENT OF TRANSPORTATION

CROSS SECTIONS

SCALE: | SHEET NO. OF SHEETS | STA. 759+00.00 TO STA. 761+50.00

F.A.P. RTE.	SECTION	COUNTY	TOTAL SHEETS	SHEET NO.
317	16W-2,RS-4;17W-1,RS-3	FULTON	240	197
		CONTRACT NO. 88703		
		ILLINOIS FED. AID PROJECT		

FINAL SURVEY	BY	DATE
SURVEYED		
PLOTTED		
TEMPLATE		
AREAS		
AREAS CHECKED		
NOTE BOOK NO.		

ORIGINAL SURVEY	BY	DATE
SURVEYED		
PLOTTED		
TEMPLATE		
AREAS		
AREAS CHECKED		
NOTE BOOK NO.		

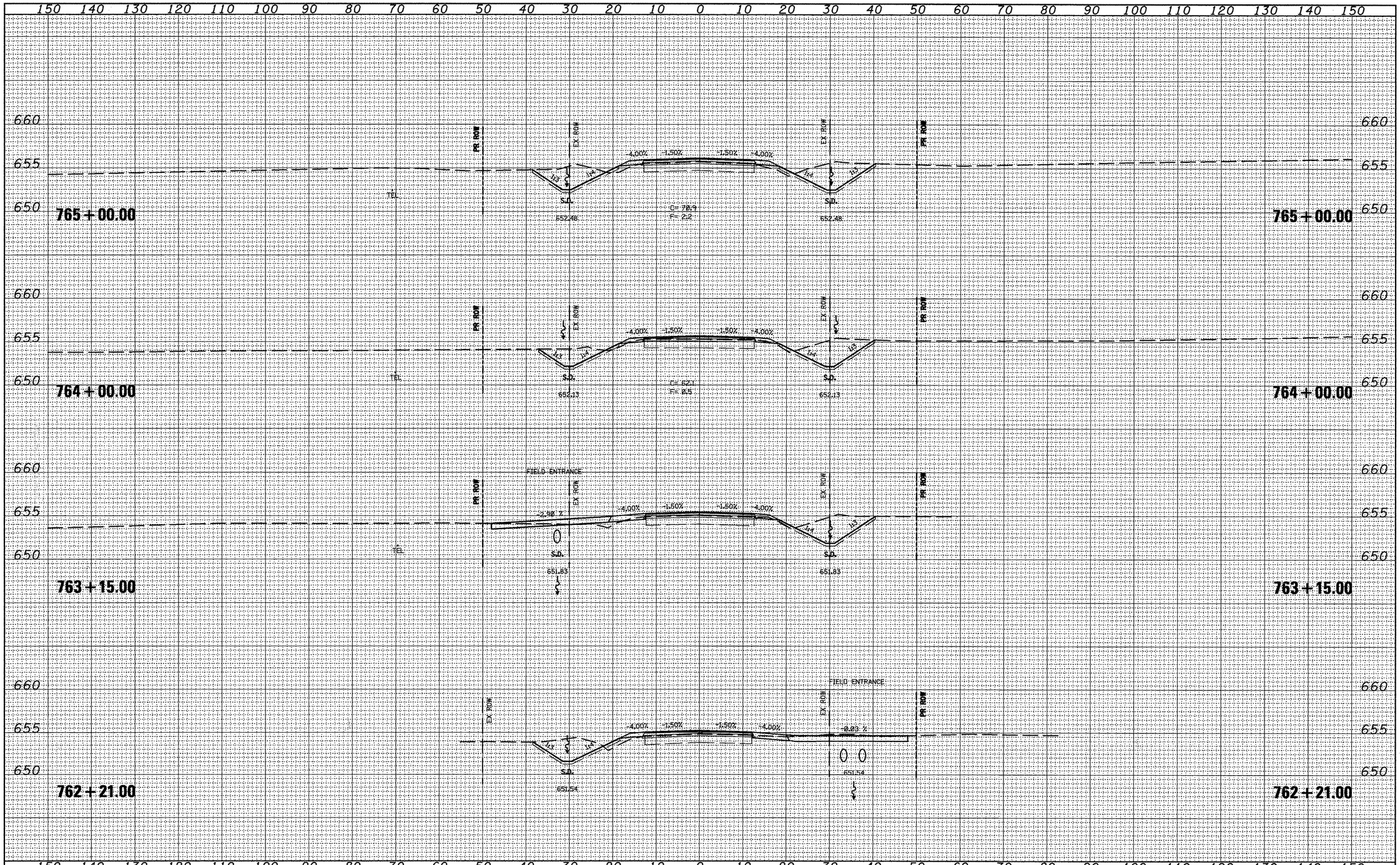

FILE NAME = xsec_sheet.dgn	USER NAME = jochumsjg	DESIGNED -	REVISED -
		DRAWN -	REVISED -
	PLOT SCALE = 20.0000 ' / IN.	CHECKED -	REVISED -
	PLOT DATE = 3/11/2010	DATE -	REVISED -

STATE OF ILLINOIS
DEPARTMENT OF TRANSPORTATION

CROSS SECTIONS

SCALE: | SHEET NO. OF SHEETS | STA. 762+21.00 TO STA. 765+00.00

F.AP. RTE.	SECTION	COUNTY	TOTAL SHEETS	SHEET NO.
317	16W-2,RS-4;17W-1,RS-3	FULTON	240	198

CONTRACT NO. 88703

ILLINOIS FED. AID PROJECT

FINAL SURVEY		BY	DATE
	SURVEYED		
	PLOTTED		
NOTE BOOK	TEMPLATE		
	AREAS		
NO.	AREAS CHECKED		

ORIGINAL SURVEY		BY	DATE
	SURVEYED		
	PLOTTED		
NOTE BOOK	TEMPLATE		
	AREAS		
NO.	AREAS CHECKED		

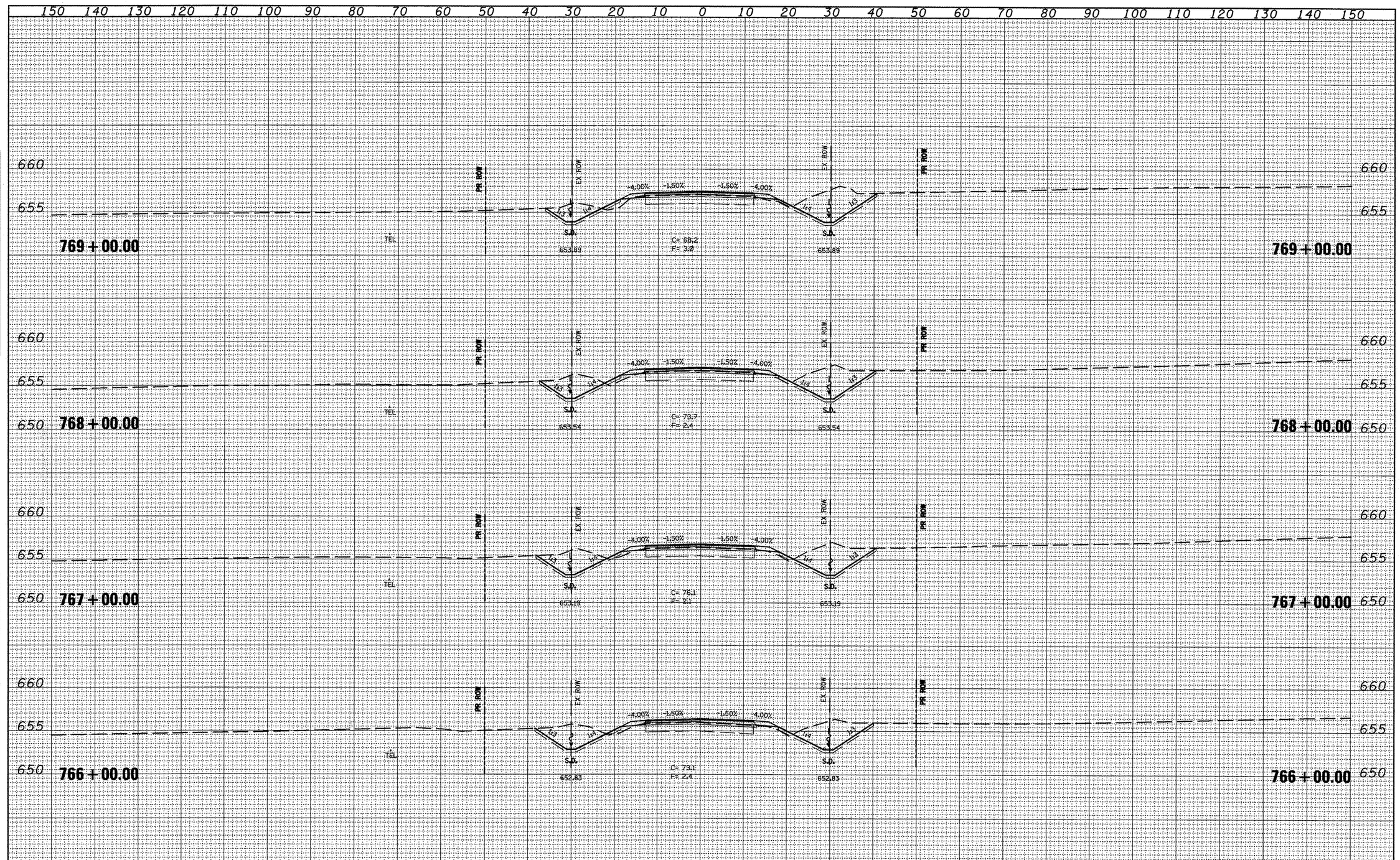

FILE NAME = xsec_sheet.dgn	USER NAME = jochums,jg	DESIGNED -	REVISED -
		DRAWN -	REVISED -
	PLOT SCALE = 20.0000 ' / IN.	CHECKED -	REVISED -
	PLOT DATE = 3/11/2010	DATE -	REVISED -

STATE OF ILLINOIS
DEPARTMENT OF TRANSPORTATION

CROSS SECTIONS

SCALE: | SHEET NO. OF SHEETS | STA. 766+00.00 TO STA. 769+00.00

F.A.AP. RTE.	SECTION	COUNTY	TOTAL SHEETS	SHEET NO.
317	16W-2,RS-4;17W-1,RS-3	FULTON	240	199

CONTRACT NO. 88703

ILLINOIS FED. AID PROJECT

FINAL SURVEY		BY	DATE
NOTE BOOK	SURVEYED		
	PLOTTED		
	TEMPLATE		
NO.	AREAS		
	AREAS CHECKED		

ORIGINAL SURVEY		BY	DATE
NOTE BOOK	SURVEYED		
	PLOTTED		
	TEMPLATE		
NO.	AREAS		
	AREAS CHECKED		

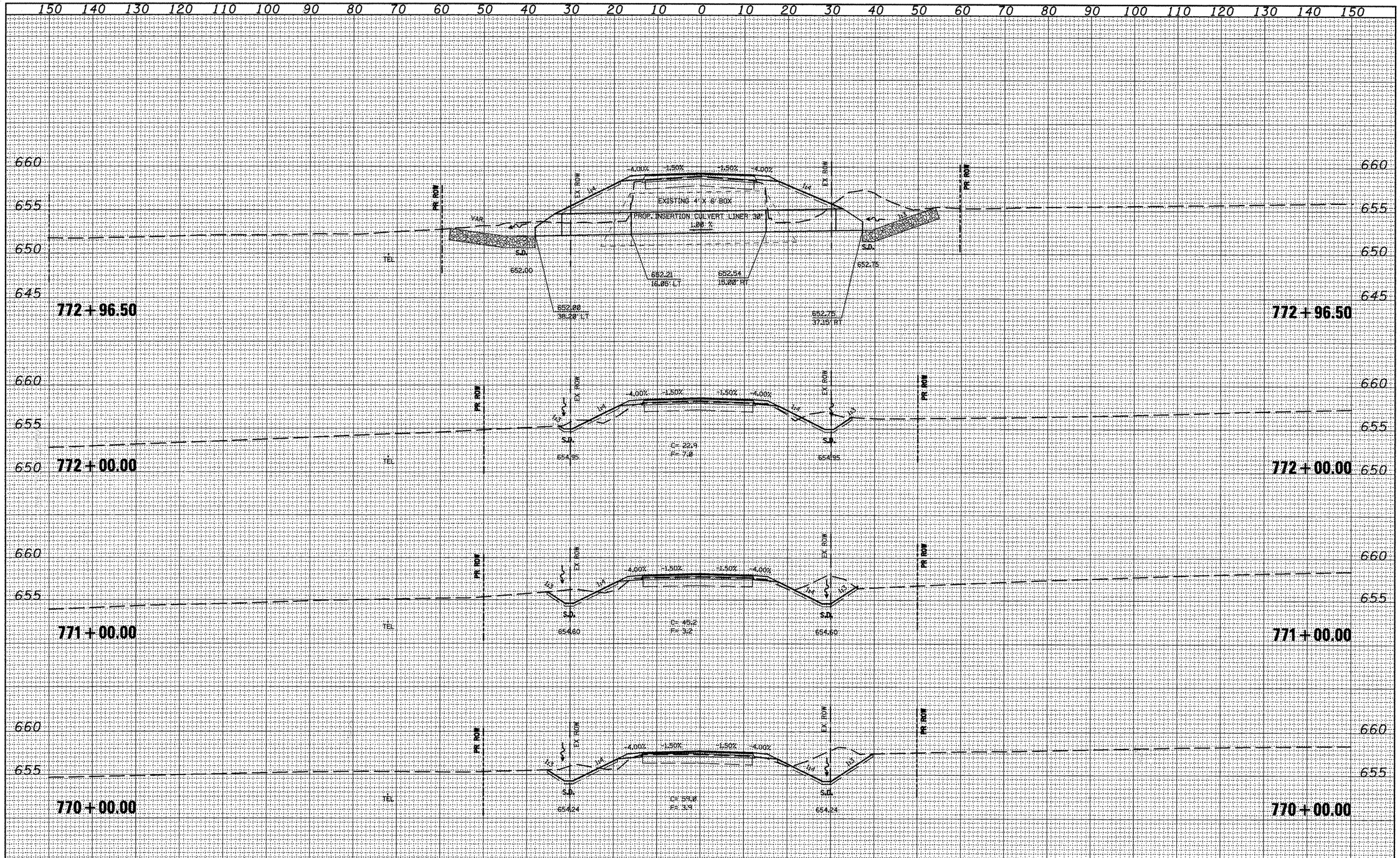

FILE NAME = xsec_sheet.dgn	USER NAME = jochumsjg	DESIGNED -	REVISED -
		DRAWN -	REVISED -
	PLOT SCALE = 20.0000 ' / IN.	CHECKED -	REVISED -
	PLOT DATE = 3/11/2010	DATE -	REVISED -

STATE OF ILLINOIS
DEPARTMENT OF TRANSPORTATION

CROSS SECTIONS

SCALE: | SHEET NO. OF SHEETS | STA. 770+00.00 TO STA. 772+96.50

F.A.P. RTE.	SECTION	COUNTY	TOTAL SHEETS	SHEET NO.
317	16W-2,RS-4;17W-1,RS-3	FULTON	240	200
		CONTRACT NO. 88703		
		ILLINOIS FED. AID PROJECT		

FINAL SURVEY	SURVEYED	BY	DATE
	PLOTTED		
	TEMPLATE		
NOTE BOOK	AREAS		
NO.	AREAS CHECKED		

ORIGINAL SURVEY	SURVEYED	BY	DATE
	PLOTTED		
	TEMPLATE		
NOTE BOOK	AREAS		
NO.	AREAS CHECKED		