5-15-09 Letting, Item 175

F.A.P. RTE.	SECTION	COUNTY	TOTAL SHEETS	SHEET NO.
303	(132, 133 & 134) RS-5	MCHENRY	36	1
FED. ROAD DIST. NO. 1	ILLINOIS	CONTRACT NO. 62496		

STATE OF ILLINOIS
DEPARTMENT OF TRANSPORTATION
DIVISION OF HIGHWAYS

PROPOSED HIGHWAY PLANS

F.A.P. 303 (IL 173)
SECTION (132, 133 & 134) RS-5
ALDEN ROAD TO US 12
RESURFACING (3P)

MCHENRY COUNTY
C-91-254-02

FOR INDEX OF SHEETS, SEE SHEET NO. 2

THESE IMPROVEMENTS ARE LOCATED WITHIN THE VILLAGES OF RICHMOND AND HEBRON

D-91-202-01

LOCATION OF SECTION INDICATED THUS:-

TRAFFIC DATA

2007 ADT - 4,700
POSTED SPEED LIMIT - 55 MPH

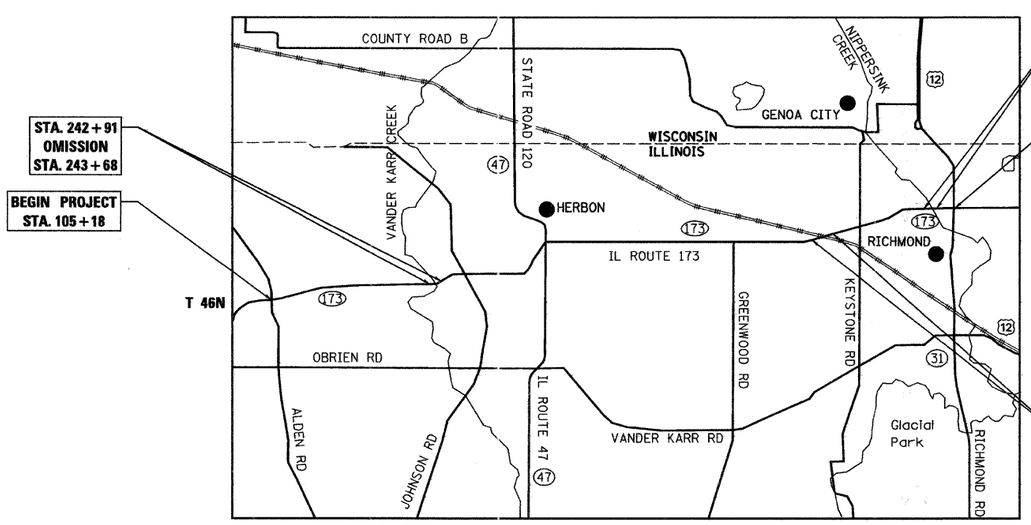

RICHMOND, HEBRON AND ALDEN TOWNSHIP

LOCATION MAP
1"=6000'

GROSS LENGTH OF PROJECT = 59,278 FT = 11.23 MI.
NET LENGTH OF PROJECT = 58,968 FT = 11.17 MI.

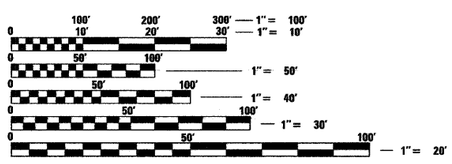

FULL SIZE PLANS HAVE BEEN PREPARED USING STANDARD ENGINEERING SCALES. REDUCED SIZED PLANS WILL NOT CONFORM TO STANDARD SCALES. IN MAKING MEASUREMENTS ON REDUCED PLANS, THE ABOVE SCALES MAY BE USED.

J.U.L.I.E.
JOINT UTILITY LOCATION INFORMATION FOR EXCAVATION
1-800-892-0123
OR 811

Ciorba Group, Inc.

DESIGN FIRM
REGISTRATION NUMBER
184-001016

CONSULTING ENGINEERS
SUITE 402, 5507 NORTH CUMBERLAND AVE
CHICAGO, ILLINOIS 60656 :: (773) 775-4009

STEPHEN N. SUGG
062-044117
LICENSED
PROFESSIONAL
ENGINEER
OF
ILLINOIS

DATE: 4/13/2009
SEAL EXPIRES: 11/30/2009

STATE OF ILLINOIS
DEPARTMENT OF TRANSPORTATION
DIVISION OF HIGHWAYS

SUBMITTED April 14, 2009
Diane M. O'Keefe
DEPUTY DIRECTOR OF HIGHWAYS, REGION ENGINEER
May 1, 2009
Charles J. Ingersoll
ENGINEER OF DESIGN AND ENVIRONMENT
May 1, 2009
Christine M. Reed
DIRECTOR OF HIGHWAYS, CHIEF ENGINEER

PRINTED BY THE AUTHORITY OF THE STATE OF ILLINOIS

DISTRICT 1 DESIGN PLAN PREPARATION ENGINEER: K. ENG (847)705-4247

CONTRACT NO. 62496

INDEX OF SHEETS

STATE STANDARDS

000001-05	STANDARD SYMBOLS, ABBREVIATIONS, AND PATTERNS
442201-03	CLASS C AND D PATCHES
482011-03	HMA SHLD. STRIPS/SHLDS. WITH RESURFACING OR WIDENING AND RESURFACING PROJECTS
604001-03	FRAME AND LIDS, TYPE 1
606001-04	CONCRETE CURB, TYPE B AND COMBINATION CONCRETE CURB AND GUTTER
701006-03	OFF-RD OPERATIONS, 2L, 2W, 15' (4.5 m) TO 24" (600 mm) FROM PAVEMENT EDGE
701201-03	LANE CLOSURE, 2L, 2W, DAY ONLY, FOR SPEEDS > 45 MPH
701301-03	LANE CLOSURE, 2L, 2W, SHORT TIME OPERATIONS
701306-02	LANE CLOSURE, 2L, 2W, SLOW MOVING OPERATIONS DAY ONLY, FOR SPEEDS > 45 MPH
701311-03	LANE CLOSURE, 2L, 2W, MOVING DAY OPERATIONS-DAY ONLY
701901-01	TRAFFIC CONTROL DEVICES
780001-02	TYPICAL PAVEMENT MARKINGS
886001-01	DETECTOR LOOP INSTALLATIONS
886006-01	TYPICAL LAYOUTS FOR DETECTION LOOPS

GENERAL NOTES

1. BEFORE STARTING ANY EXCAVATION, THE CONTRACTOR SHALL CALL "JULIE" AT 800-892-0123 OR 811 FOR FIELD LOCATIONS OF BURIED ELECTRIC, TELEPHONE, AND GAS FACILITIES. (48 HOUR NOTIFICATION IS REQUIRED)

2. 10 FEET (3 METER) TRANSITIONS SHALL BE USED TO MATCH PROPOSED CURB AND GUTTER AND MEDIAN ITEMS OF WORK TO EXISTING CURB AND GUTTER AND MEDIANS IN THE FIELD UNLESS OTHERWISE SHOWN. THE TRANSITIONS SHALL BE PAID FOR AT THE CONTRACT UNIT PRICE FOR THE PROPOSED ITEMS OF WORK SPECIFIED.

3. THE CONTRACTOR SHALL COORDINATE CONSTRUCTION ACTIVITIES WITH UTILITY COMPANIES.

4. THE CONTRACTOR WILL NOT BE ALLOWED TO SET UP A YARD OR FIELD OFFICE ON STATE PROPERTY WITHOUT WRITTEN PERMISSION FROM THE DEPARTMENT.

5. WHEN ARTIFICIAL LIGHTING IS USED IN NIGHT OPERATIONS THE CONTRACTOR SHALL EXERCISE THE UTMOST PRECAUTIONS IN PREVENTING ADVERSE VISIBILITY TO THE MOTORING PUBLIC AND ADJOINING RESIDENTIAL AREAS.

6. THE FOLLOWING RATES OF APPLICATION HAVE BEEN ASSUMED IN CALCULATING PLAN QUANTITIES:

BITUMINOUS MATERIALS (PRIME COAT)	0.0004 TONS/SQ YD
HOT-MIX ASPHALT SURFACE COURSE	112 LBS/SQ YD/INCH
POLYMERIZED LEVELING BINDER (MACHINE METHOD)	105 LBS/SQ YD/INCH

7. THE ENGINEER SHALL CONTACT THE TRAFFIC CONTROL SUPERVISORS AT (847) 705-4470 A MINIMUM OF 72 HOURS PRIOR TO THE START OF WORK.

8. TWO WEEKS PRIOR TO PLACEMENT OF PERMANENT PAVEMENT MARKINGS THE ENGINEER SHALL CONTACT DEBBIE HANLON, AREA TRAFFIC FIELD ENGINEER, AT (847) 438-2300.

9. WHEN MILLED PAVEMENT IS OPEN TO TRAFFIC THE MAXIMUM GRADE DIFFERENTIAL BETWEEN PASSES OF THE MILLING MACHINE SHALL NOT EXCEED 1 1/2" (40 MM) WHERE THE SPEED LIMIT IS 45 MPH (80 KM/H) OR LESS AND 1" (25 MM) WHERE THE SPEED LIMIT IS GREATER THAN 45 MPH (80 KM/H). WITH WRITTEN APPROVAL FROM THE ENGINEER, A MAXIMUM GRADE DIFFERENTIAL OF 3" (75 MM) MAY BE ALLOWED IF THE EDGE OF THE MILLING IS SLOPED A MINIMUM 3:1 (H:V).

10. BUTT JOINTS WILL BE INSTALLED AT THE END OF ALL RESURFACING (WHERE RESURFACING MEETS EXISTING PAVEMENT). IN ACCORDANCE WITH THE "BUTT JOINT AND HMA TAPER DETAILS" SHEET INCLUDED IN THE PLANS, UNLESS OTHERWISE SPECIFIED.

11. FOR PAVEMENT MARKING, REFER TO DISTRICT ONE TYPICAL MARKINGS FOR DETAILS SHOWN.

12. MATCH EXISTING PAVEMENT MARKINGS AT PROJECT LIMITS AND OMISSIONS.

13. ALL PATCHES OPENED ON A PARTICULAR DAY MUST BE FILLED THAT DAY TO THE TOP OF THE MILLED PAVEMENT SURFACE.

14. IDOT TRAFFIC SIGNAL AND SYSTEM DETECTION LOOPS ARE PRESENT AT US 12. THE CONTRACTOR MUST NOTIFY THE IDOT AREA TRAFFIC SIGNAL MAINTENANCE AND OPERATIONS ENGINEER AT (847) 705-4139 AND THE DEPARTMENT'S ELECTRICAL MAINTENANCE CONTRACTOR PRIOR TO BEGINNING WORK, AT WHICH TIME ARRANGEMENTS WILL BE MADE TO ADJUST THE TRAFFIC CONTROLLER TIMING TO COMPENSATE FOR THE ABSENCE OF DETECTION. REPLACEMENT OF LOOPS DOES NOT REQUIRE MAINTENANCE TRANSFER, BUT DOES REQUIRE NOTIFICATION OF WORK AND INSPECTION. COORDINATION WITH THE DISTRICT IS CONSIDERED INCIDENTAL TO THIS CONTRACT.

15. NO OVERNIGHT CLOSURES SHOULD BE ALLOWED

16. CONTINGENCY QUANTITIES HAVE BEEN INCLUDED FOR THE FOLLOWING ITEMS TO BE USED AT TTHE DIRECTION OF THE ENGINEER:

60406000 FRAMES AND LIDS, TYPE 1, OPEN LID - 3 EACH
60406100 FRAMES AND LIDS, TYPE 1, CLOSED LID - 3 EACH

	SUMMARY OF QUANTITIES			URBAN 100% STATE TOTAL QUANTITY	CONSTRUCTION TYPE CODE
	CODE NO.	DESCRIPTION	UNIT		ROADWAY 1000
	20201006	GRADING AND SHAPING SHOULDERS	UNIT	1,060	1,060
	35501316	HOT-MIX ASPHALT BASE COURSE, 8"	SQ YD	20	20
	40201000	AGGREGATE FOR TEMPORARY ACCESS	TON	15	15
	40600200	BITUMINOUS MATERIALS (PRIME COAT)	TON	170	170
	40600300	AGGREGATE (PRIME COAT)	TON	835	835
	40600400	MIXTURE FOR CRACKS, JOINTS, AND FLANGEWAYS	TON	25	25
	40600535	LEVELING BINDER (HAND METHOD), N70	TON	50	50
	40600895	CONSTRUCTING TEST STRIP	EACH	2	2
	40600982	HOT-MIX ASPHALT SURFACE REMOVAL - BUTT JOINT	SQ YD	1,490	1,490
	40600990	TEMPORARY RAMP	SQ YD	1,220	1,220
	40603310	HOT-MIX ASPHALT SURFACE COURSE, MIX "C", N50	TON	2	2
	40603340	HOT-MIX ASPHALT SURFACE COURSE, MIX "D", N70	TON	18,000	18,000
	44000158	HOT-MIX ASPHALT SURFACE REMOVAL, 2 1/4"	SQ YD	207,700	207,700
	44000200	DRIVEWAY PAVEMENT REMOVAL	SQ YD	20	20
	44001700	COMBINATION CONCRETE CURB AND GUTTER REMOVAL AND REPLACEMENT	FOOT	400	400
	44201761	CLASS D PATCHES, TYPE I, 10 INCH	SQ YD	200	200
	44201765	CLASS D PATCHES, TYPE II, 10 INCH	SQ YD	3,200	3,200
	44201769	CLASS D PATCHES, TYPE III, 10 INCH	SQ YD	1,400	1,400
	44201771	CLASS D PATCHES, TYPE IV, 10 INCH	SQ YD	2,000	2,000
	48102100	AGGREGATE WEDGE SHOULDER, TYPE B	TON	5,860	5,860
	55039700	STORM SEWERS TO BE CLEANED	FOOT	500	500
	60300310	FRAMES AND LIDS TO BE ADJUSTED (SPECIAL)	EACH	15	15
	60406000	FRAMES AND LIDS, TYPE 1, OPEN LID	EACH	3	3
	60406100	FRAMES AND LIDS, TYPE 1, CLOSED LID	EACH	3	3

* DENOTES SPECIALTY ITEM

	SUMMARY OF QUANTITIES			URBAN 100% STATE TOTAL QUANTITY	CONSTRUCTION TYPE CODE
	CODE NO.	DESCRIPTION	UNIT		ROADWAY 1000
	67000400	ENGINEER'S FIELD OFFICE, TYPE A	CAL MO	6	6
	67100100	MOBILIZATION	L SUM	1	1
	70100450	TRAFFIC CONTROL AND PROTECTION, STANDARD 701201	L SUM	1	1
	70100460	TRAFFIC CONTROL AND PROTECTION, STANDARD 701306	L SUM	1	1
	70300100	SHORT-TERM PAVEMENT MARKING	FOOT	35,400	35,400
	70300210	TEMPORARY PAVEMENT MARKING - LETTERS AND SYMBOLS	SQ FT	840	840
	70300220	TEMPORARY PAVEMENT MARKING - LINE 4"	FOOT	186,000	186,000
	70300240	TEMPORARY PAVEMENT MARKING - LINE 6"	FOOT	3,600	3,600
	70300260	TEMPORARY PAVEMENT MARKING - LINE 12"	FOOT	1,950	1,950
	70300280	TEMPORARY PAVEMENT MARKING - LINE 24"	FOOT	780	780
	70301000	WORK ZONE PAVEMENT MARKING REMOVAL	SQ FT	22,800	22,800
*	78000100	THERMOPLASTIC PAVEMENT MARKING - LETTERS AND SYMBOLS	SQ FT	280	280
*	78000200	THERMOPLASTIC PAVEMENT MARKING - LINE 4"	FOOT	177,500	177,500
*	78000400	THERMOPLASTIC PAVEMENT MARKING - LINE 6"	FOOT	1,200	1,200
*	78000600	THERMOPLASTIC PAVEMENT MARKING - LINE 12"	FOOT	650	650
*	78000650	THERMOPLASTIC PAVEMENT MARKING - LINE 24"	FOOT	260	260
*	78100100	RAISED REFLECTIVE PAVEMENT MARKER	EACH	1,570	1,570
	78300200	RAISED REFLECTIVE PAVEMENT MARKER REMOVAL	EACH	1,500	1,500
*	88600600	DETECTOR LOOP REPLACEMENT	FOOT	150	150
	X0322256	TEMPORARY INFORMATION SIGNING	SQ FT	52	52
	X4067107	POLYMERIZED LEVELING BINDER (MACHINE METHOD), IL-4.75, N50	TON	11,300	11,300
	Z0018500	DRAINAGE STRUCTURES TO BE CLEANED	EACH	15	15
	Z0048665	RAILROAD PROTECTIVE LIABILITY INSURANCE	L SUM	1	1

Ciorba Group, Inc.
CONSULTING ENGINEERS
5507 North Cumberland Avenue, Suite 402
Chicago, Illinois 60656
Tel. 773.775.4009 Fax 773.775.4014

USER NAME = alau	DESIGNED - EPS	REVISED -
	DRAWN - EPS	REVISED -
PLOT SCALE = 1.0000 ' / IN.	CHECKED - WBL	REVISED -
PLOT DATE = 4/21/2009	DATE - 4/22/09	REVISED -

STATE OF ILLINOIS
DEPARTMENT OF TRANSPORTATION

IL 173
ALDEN ROAD TO US 12
SUMMARY OF QUANTITIES

SCALE: | SHEET NO. 3 OF 36 SHEETS | STA. | TO STA.

F.A.P. RTE.	SECTION	COUNTY	TOTAL SHEETS	SHEET NO.
303	(132, 133 & 134) RS-5	MCHENRY	36	3
		CONTRACT NO. 62496		

FED. ROAD DIST. NO. 1 | ILLINOIS | FED. AID PROJECT

FILE NAME = N:\PROJ\13369\3368.21\Design\ProposedPlan\3368.21-03-Quantities.dgn

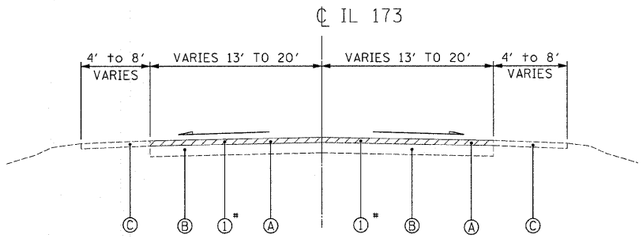

EXISTING TYPICAL SECTION
STA. 105+18 TO STA. 242+91
STA. 243+68 TO STA. 585+51
STA. 586+30 TO STA. 680+63
STA. 682+17 TO STA. 697+96

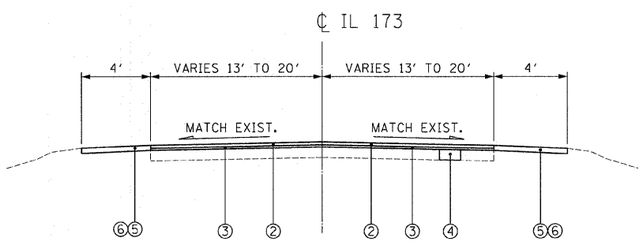

PROPOSED TYPICAL SECTION
STA. 105+18 TO STA. 242+91
STA. 243+68 TO STA. 585+51
STA. 586+30 TO STA. 680+63
STA. 682+17 TO STA. 697+96

EXISTING CONDITIONS:

Ⓐ HOT-MIX ASPHALT SURFACE AND BINDER COURSE, 3" AND VARIES
Ⓑ HOT-MIX ASPHALT BASE COURSE, 9"
Ⓒ AGGREGATE SHOULDER

PROPOSED IMPROVEMENTS:

① HOT-MIX ASPHALT SURFACE REMOVAL, 2 1/4"
② HOT-MIX ASPHALT SURFACE COURSE, MIX "D", N70, 1 1/2"
③ POLYMERIZED LEVELING BINDER (MACHINE METHOD), IL-4.75, N50, 3/4"
④ CLASS D PATCHES, 10" (DETERMINED BY ENGINEER IN FIELD)
⑤ AGGREGATE WEDGE SHOULDER, TYPE B
⑥ GRADING AND SHAPING SHOULDERS

A QUANTITY FOR LEVELING BINDER (HAND METHOD) HAS BEEN PROVIDED FOR USE AT ENTRANCES AFTER GRINDING OF EXISTING PAVEMENT.

* THE CONTRACTOR SHALL MILL FIRST BEFORE PATCHING

HOT-MIX ASPHALT MIXTURE REQUIREMENTS CHART

OPERATIONS	MIXTURE TYPE	AC TYPE	PERCENT AIR VOIDS
ROADWAY RESURFACING	HOT-MIX ASPHALT SURFACE COURSE, MIX "D", N70 (IL-9.5MM)	PG 64-22	4% @ 70 GYR
	POLYMERIZED LEVELING BINDER (MACHINE METHOD), IL-4.75, N50	SBS/SBR PG 76-28/-22	4% @ 50 GYR
MAINTENANCE OF TRAFFIC	LEVELING BINDER (HAND METHOD), N70 (IL-9.5MM)	PG 64-22 *	4% @ 70 GYR
PAVEMENT PATCHING	CLASS D PATCHES, 10" (HMA BINDER IL-19 MM)	PG 64-22 *	4% @ 70 GYR
DRIVES BEHIND CURB	HOT-MIX ASPHALT SURFACE COURSE MIX "C" N50 (IL-9.5MM) 2" THICKNESS	PG 64-22	4% @ 50 GYR
	HOT-MIX ASPHALT BASE COURSE, 8" (HMA BINDER IL-19 MM)	PG 64-22 *	4% @ 50 GYR

THE UNIT WEIGHT USED TO CALCULATE ALL HMA SURFACE MIXTURE QUANTITIES IS 112 LBS/SQ YD/IN.

* WHEN RAP EXCEEDS 20%, THE NEW ASPHALT BINDER IN THE MIX SHALL BE PG 58-22.

Ciorba Group, Inc.
CONSULTING ENGINEERS
5507 North Cumberland Avenue, Suite 402
Chicago, Illinois 60656
Tel. 773.775.4009 Fax 773.775.4014

USER NAME = alau	DESIGNED - EPS	REVISED -	
	DRAWN - EPS	REVISED -	
PLOT SCALE = 5.0000 ' / IN.	CHECKED - WBL	REVISED -	
PLOT DATE = 4/21/2009	DATE - 4/22/09	REVISED -	

STATE OF ILLINOIS
DEPARTMENT OF TRANSPORTATION

IL 173
ALDEN ROAD TO US 12
TYPICAL SECTIONS

SCALE: N.T.S. | SHEET NO. 4 OF 36 SHEETS | STA. | TO STA.

F.A.P. RTE.	SECTION	COUNTY	TOTAL SHEETS	SHEET NO.
303	(132, 133 & 134) RS-5	MCHENRY	36	4
		CONTRACT NO. 62496		

FED. ROAD DIST. NO. 1 | ILLINOIS | FED. AID PROJECT

FILE NAME = N:\PROJ\1336\1336.21\Design\Proposed\en\1336.21-04-Typical Sections.dgn

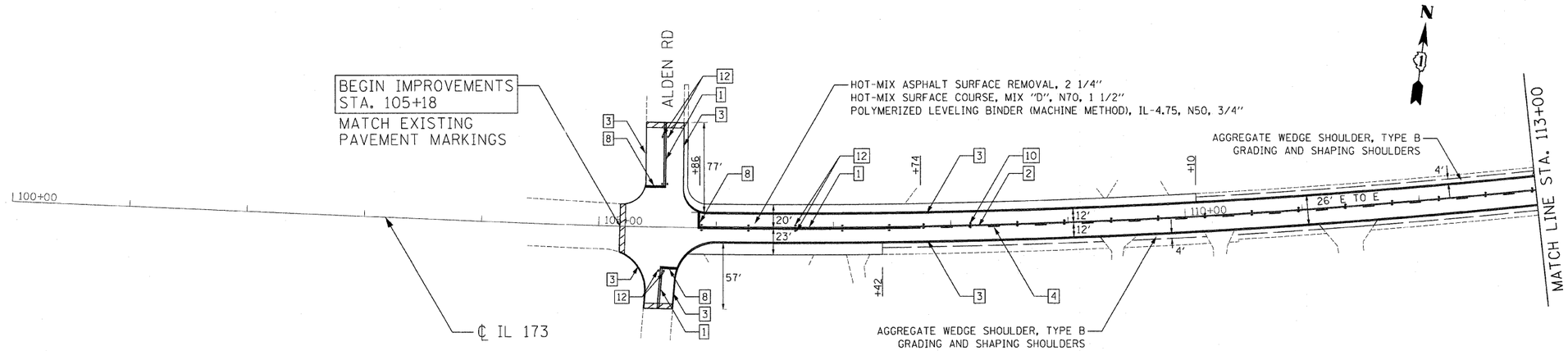

LEGEND:

1. THERMOPLASTIC PAVEMENT MARKING - LINE 4" (DOUBLE YELLOW SOLID LINE 11" C-C)
2. THERMOPLASTIC PAVEMENT MARKING - LINE 4" (YELLOW SOLID LINE)
3. THERMOPLASTIC PAVEMENT MARKING - LINE 4" (WHITE EDGE LINE)
4. THERMOPLASTIC PAVEMENT MARKING - LINE 4" (YELLOW LANE LINE - 10' DASH, 30' SKIP) WITH RAISED REFLECTIVE PAVEMENT MARKERS (1 TWO-WAY AMBER MARKER) (40' C-C)
5. THERMOPLASTIC PAVEMENT MARKING - LINE 4" (YELLOW LANE LINE - 10' DASH, 30' SKIP) WITH RAISED REFLECTIVE PAVEMENT MARKERS (1 TWO-WAY AMBER MARKER) (80' C-C)
6. THERMOPLASTIC PAVEMENT MARKING - LINE 6" (WHITE SOLID LINE)
7. THERMOPLASTIC PAVEMENT MARKING - LINE 12" (YELLOW DIAGONAL LINE)
8. THERMOPLASTIC PAVEMENT MARKING - LINE 24" (WHITE STOP LINE)
9. THERMOPLASTIC PAVEMENT MARKING - LETTERS AND SYMBOLS (TYP.)
10. RAISED REFLECTIVE PAVEMENT MARKERS (ONE-WAY AMBER MARKER) (40' C-C)
11. RAISED REFLECTIVE PAVEMENT MARKERS (ONE-WAY AMBER MARKER) (80' C-C)
12. RAISED REFLECTIVE PAVEMENT MARKERS (TWO-WAY AMBER MARKER) (40' C-C)
13. RAISED REFLECTIVE PAVEMENT MARKERS (TWO-WAY AMBER MARKER) (80' C-C)
14. RAISED REFLECTIVE PAVEMENT MARKERS (ONE-WAY CRYSTAL MARKER) (40' C-C)

HOT-MIX ASPHALT SURFACE REMOVAL - BUTT JOINT
TEMPORARY RAMP

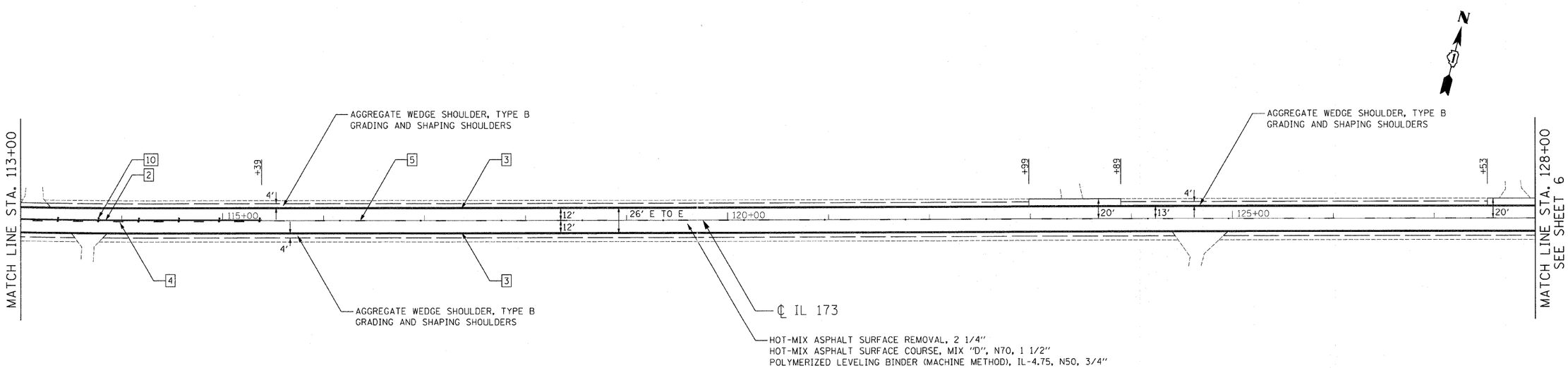

HOT-MIX ASPHALT SURFACE REMOVAL - BUTT JOINT
TEMPORARY RAMP

FILE NAME = n:\proj\3868\3868.21\design\proposed\ben\3868.21-Prop01.dgn

Ciorba Group, Inc.
CONSULTING ENGINEERS
5507 North Cumberland Avenue, Suite 402
Chicago, Illinois 60656
Tel. 773.775.4009 Fax 773.775.4014

USER NAME = alau	DESIGNED - DD	REVISED -	
	DRAWN - RJR	REVISED -	
PLOT SCALE = 50.0000 ' / IN.	CHECKED - SNS	REVISED -	
PLOT DATE = 4/21/2009	DATE - 4/22/09	REVISED -	

STATE OF ILLINOIS
DEPARTMENT OF TRANSPORTATION

IL 173
ALDEN ROAD TO US 12
PROPOSED ROADWAY AND PAVEMENT MARKING PLAN

SCALE: 1"=50' | SHEET NO. 5 OF 36 SHEETS | STA. 100+00 TO STA. 128+00

F.A.P. RTE.	SECTION	COUNTY	TOTAL SHEETS	SHEET NO.
303	(132, 133 & 134) RS-5	MCHENRY	36	5
		CONTRACT NO. 62496		

FED. ROAD DIST. NO. 1 | ILLINOIS | FED. AID PROJECT

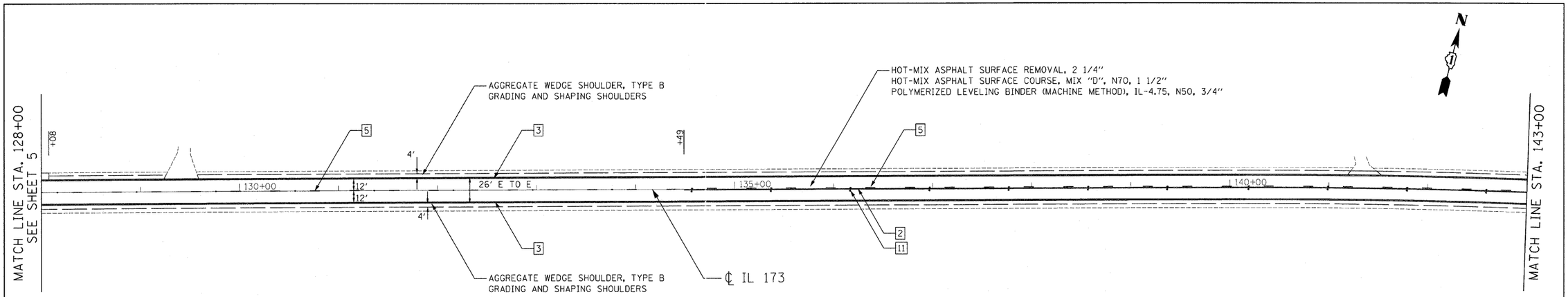

LEGEND:

1. THERMOPLASTIC PAVEMENT MARKING - LINE 4" (DOUBLE YELLOW SOLID LINE 11" C-C)
2. THERMOPLASTIC PAVEMENT MARKING - LINE 4" (YELLOW SOLID LINE)
3. THERMOPLASTIC PAVEMENT MARKING - LINE 4" (WHITE EDGE LINE)
4. THERMOPLASTIC PAVEMENT MARKING - LINE 4" (YELLOW LANE LINE - 10' DASH, 30' SKIP) WITH RAISED REFLECTIVE PAVEMENT MARKERS (1 TWO-WAY AMBER MARKER) (40' C-C)
5. THERMOPLASTIC PAVEMENT MARKING - LINE 4" (YELLOW LANE LINE - 10' DASH, 30' SKIP) WITH RAISED REFLECTIVE PAVEMENT MARKERS (1 TWO-WAY AMBER MARKER) (80' C-C)
6. THERMOPLASTIC PAVEMENT MARKING - LINE 6" (WHITE SOLID LINE)
7. THERMOPLASTIC PAVEMENT MARKING - LINE 12" (YELLOW DIAGONAL LINE)
8. THERMOPLASTIC PAVEMENT MARKING - LINE 24" (WHITE STOP LINE)
9. THERMOPLASTIC PAVEMENT MARKING - LETTERS AND SYMBOLS (TYP.)
10. RAISED REFLECTIVE PAVEMENT MARKERS (ONE-WAY AMBER MARKER) (40' C-C)
11. RAISED REFLECTIVE PAVEMENT MARKERS (ONE-WAY AMBER MARKER) (80' C-C)
12. RAISED REFLECTIVE PAVEMENT MARKERS (TWO-WAY AMBER MARKER) (40' C-C)
13. RAISED REFLECTIVE PAVEMENT MARKERS (TWO-WAY AMBER MARKER) (80' C-C)
14. RAISED REFLECTIVE PAVEMENT MARKERS (ONE-WAY CRYSTAL MARKER) (40' C-C)

HOT-MIX ASPHALT SURFACE REMOVAL - BUTT JOINT
TEMPORARY RAMP

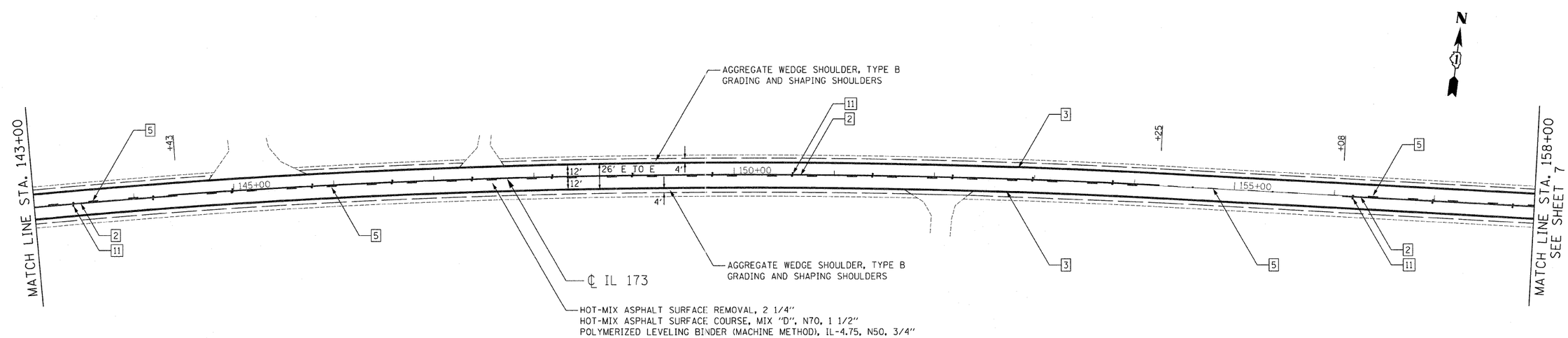

HOT-MIX ASPHALT SURFACE REMOVAL - BUTT JOINT
TEMPORARY RAMP

FILE NAME = c:\pwrg\33681\33681 21\design\proposedplan\33681 21-Prop02.dgn

Ciorba Group, Inc.
CONSULTING ENGINEERS
5507 North Cumberland Avenue, Suite 402
Chicago, Illinois 60656
Tel. 773.775.4009 Fax 773.775.4014

USER NAME = alau	DESIGNED - DD	REVISED -	
	DRAWN - RJR	REVISED -	
PLOT SCALE = 50.0000 ' / IN.	CHECKED - SNS	REVISED -	
PLOT DATE = 4/21/2009	DATE - 4/22/09	REVISED -	

STATE OF ILLINOIS
DEPARTMENT OF TRANSPORTATION

IL 173
ALDEN ROAD TO US 12
PROPOSED ROADWAY AND PAVEMENT MARKING PLAN

SCALE: 1"=50' | SHEET NO. 6 OF 36 SHEETS | STA. 128+00 TO STA. 158+00

F.A.P. RTE.	SECTION	COUNTY	TOTAL SHEETS	SHEET NO.
303	(132, 133 & 134) RS-5	MCHENRY	36	6
		CONTRACT NO. 62496		

FED. ROAD DIST. NO. 1 | ILLINOIS | FED. AID PROJECT

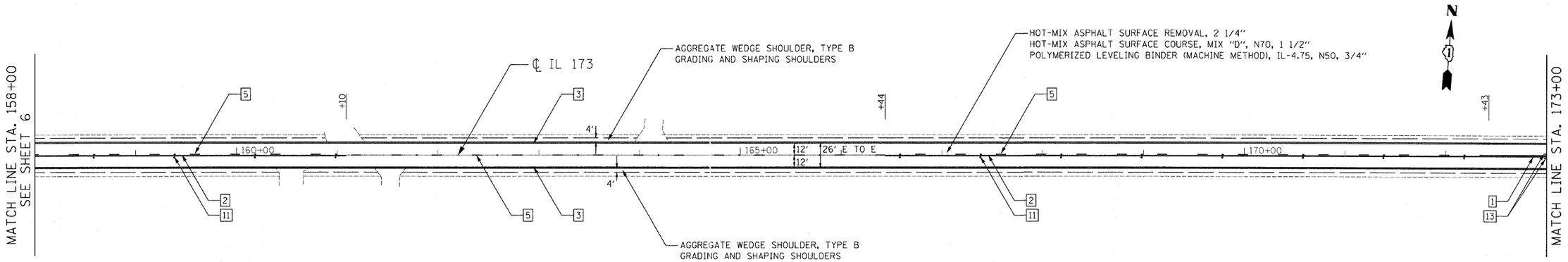

LEGEND:

1. THERMOPLASTIC PAVEMENT MARKING - LINE 4" (DOUBLE YELLOW SOLID LINE 11" C-C)
2. THERMOPLASTIC PAVEMENT MARKING - LINE 4" (YELLOW SOLID LINE)
3. THERMOPLASTIC PAVEMENT MARKING - LINE 4" (WHITE EDGE LINE)
4. THERMOPLASTIC PAVEMENT MARKING - LINE 4" (YELLOW LANE LINE - 10' DASH, 30' SKIP) WITH RAISED REFLECTIVE PAVEMENT MARKERS (1 TWO-WAY AMBER MARKER) (40' C-C)
5. THERMOPLASTIC PAVEMENT MARKING - LINE 4" (YELLOW LANE LINE - 10' DASH, 30' SKIP) WITH RAISED REFLECTIVE PAVEMENT MARKERS (1 TWO-WAY AMBER MARKER) (80' C-C)
6. THERMOPLASTIC PAVEMENT MARKING - LINE 6" (WHITE SOLID LINE)
7. THERMOPLASTIC PAVEMENT MARKING - LINE 12" (YELLOW DIAGONAL LINE)
8. THERMOPLASTIC PAVEMENT MARKING - LINE 24" (WHITE STOP LINE)
9. THERMOPLASTIC PAVEMENT MARKING - LETTERS AND SYMBOLS (TYP.)
10. RAISED REFLECTIVE PAVEMENT MARKERS (ONE-WAY AMBER MARKER) (40' C-C)
11. RAISED REFLECTIVE PAVEMENT MARKERS (ONE-WAY AMBER MARKER) (80' C-C)
12. RAISED REFLECTIVE PAVEMENT MARKERS (TWO-WAY AMBER MARKER) (40' C-C)
13. RAISED REFLECTIVE PAVEMENT MARKERS (TWO-WAY AMBER MARKER) (80' C-C)
14. RAISED REFLECTIVE PAVEMENT MARKERS (ONE-WAY CRYSTAL MARKER) (40' C-C)

HOT-MIX ASPHALT SURFACE REMOVAL - BUTT JOINT
TEMPORARY RAMP

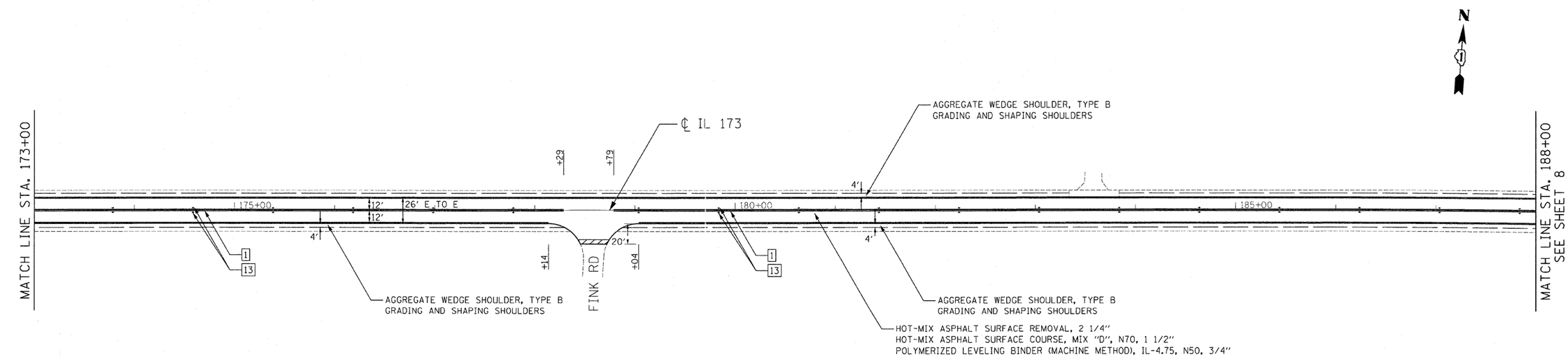

HOT-MIX ASPHALT SURFACE REMOVAL - BUTT JOINT
TEMPORARY RAMP

FILE NAME = n:\proj\3368\3368.21\design\proposedplan\3368.21-Prop07.dgn

Ciorba Group, Inc.
CONSULTING ENGINEERS
5507 North Cumberland Avenue, Suite 402
Chicago, Illinois 60656
Tel. 773.775.4009 Fax 773.775.4014

USER NAME = alau	DESIGNED - DD	REVISED -	
	DRAWN - RJR	REVISED -	
PLOT SCALE = 50.0000 ' / IN.	CHECKED - SNS	REVISED -	
PLOT DATE = 4/21/2009	DATE - 4/22/09	REVISED -	

STATE OF ILLINOIS
DEPARTMENT OF TRANSPORTATION

IL 173
ALDEN ROAD TO US 12
PROPOSED ROADWAY AND PAVEMENT MARKING PLAN

SCALE: 1"=50' | SHEET NO. 7 OF 36 SHEETS | STA. 158+00 TO STA. 188+00

F.A.P. RTE.	SECTION	COUNTY	TOTAL SHEETS	SHEET NO.
303	(132, 133 & 134) RS-5	MCHENRY	36	7
		CONTRACT NO. 62496		

FED. ROAD DIST. NO. 1 | ILLINOIS | FED. AID PROJECT

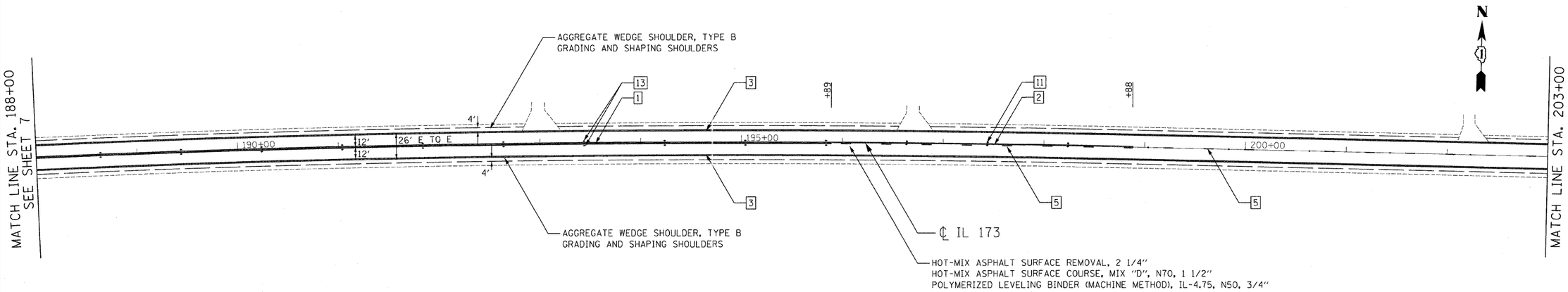

LEGEND:

1. THERMOPLASTIC PAVEMENT MARKING - LINE 4" (DOUBLE YELLOW SOLID LINE 11" C-C)
2. THERMOPLASTIC PAVEMENT MARKING - LINE 4" (YELLOW SOLID LINE)
3. THERMOPLASTIC PAVEMENT MARKING - LINE 4" (WHITE EDGE LINE)
4. THERMOPLASTIC PAVEMENT MARKING - LINE 4" (YELLOW LANE LINE - 10' DASH, 30' SKIP) WITH RAISED REFLECTIVE PAVEMENT MARKERS (1 TWO-WAY AMBER MARKER) (40' C-C)
5. THERMOPLASTIC PAVEMENT MARKING - LINE 4" (YELLOW LANE LINE - 10' DASH, 30' SKIP) WITH RAISED REFLECTIVE PAVEMENT MARKERS (1 TWO-WAY AMBER MARKER) (80' C-C)
6. THERMOPLASTIC PAVEMENT MARKING - LINE 6" (WHITE SOLID LINE)
7. THERMOPLASTIC PAVEMENT MARKING - LINE 12" (YELLOW DIAGONAL LINE)
8. THERMOPLASTIC PAVEMENT MARKING - LINE 24" (WHITE STOP LINE)
9. THERMOPLASTIC PAVEMENT MARKING - LETTERS AND SYMBOLS (TYP.)
10. RAISED REFLECTIVE PAVEMENT MARKERS (ONE-WAY AMBER MARKER) (40' C-C)
11. RAISED REFLECTIVE PAVEMENT MARKERS (ONE-WAY AMBER MARKER) (80' C-C)
12. RAISED REFLECTIVE PAVEMENT MARKERS (TWO-WAY AMBER MARKER) (40' C-C)
13. RAISED REFLECTIVE PAVEMENT MARKERS (TWO-WAY AMBER MARKER) (80' C-C)
14. RAISED REFLECTIVE PAVEMENT MARKERS (ONE-WAY CRYSTAL MARKER) (40' C-C)

HOT-MIX ASPHALT SURFACE REMOVAL - BUTT JOINT
TEMPORARY RAMP

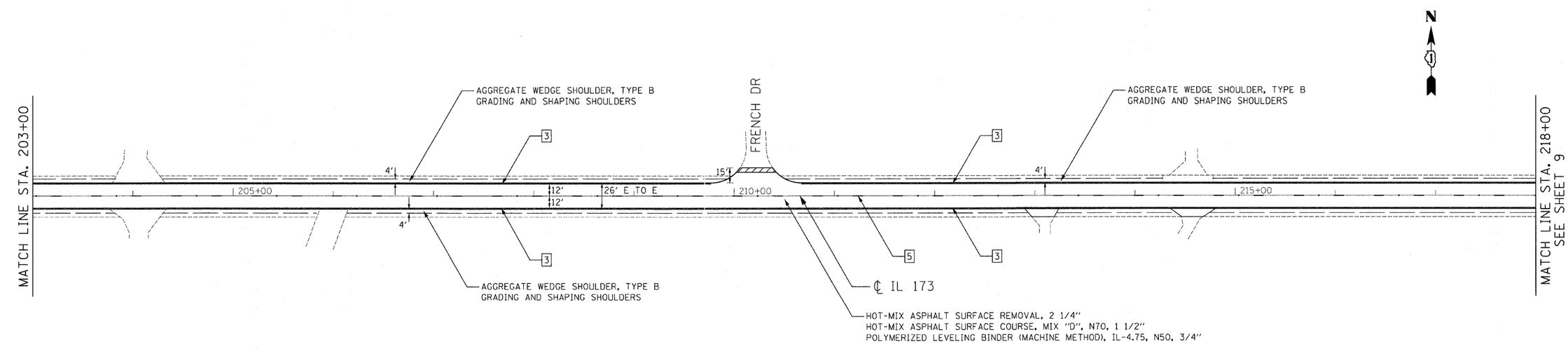

HOT-MIX ASPHALT SURFACE REMOVAL - BUTT JOINT
TEMPORARY RAMP

FILE NAME = c:\pwworking\3368\3368.21\design\proposedplan\3368.21-Prop04.dgn

Ciorba Group, Inc. CONSULTING ENGINEERS 5507 North Cumberland Avenue, Suite 402 Chicago, Illinois 60656 Tel. 773.775.4009 Fax 773.775.4014	USER NAME = alau	DESIGNED - DD	REVISED -	STATE OF ILLINOIS DEPARTMENT OF TRANSPORTATION	IL 173 ALDEN ROAD TO US 12 PROPOSED ROADWAY AND PAVEMENT MARKING PLAN	F.A.P. RTE.	SECTION	COUNTY	TOTAL SHEETS	SHEET NO.
		DRAWN - RJR	REVISED -			303	(132, 133 & 134) RS-5	MCHENRY	36	8
	PLOT SCALE = 50.0000 ' / IN.	CHECKED - SNS	REVISED -					CONTRACT NO. 62496		
	PLOT DATE = 4/21/2009	DATE - 4/22/09	REVISED -		SCALE: 1"=50' SHEET NO. 8 OF 36 SHEETS STA. 188+00 TO STA. 218+00	FED. ROAD DIST. NO. 1	ILLINOIS	FED. AID PROJECT		

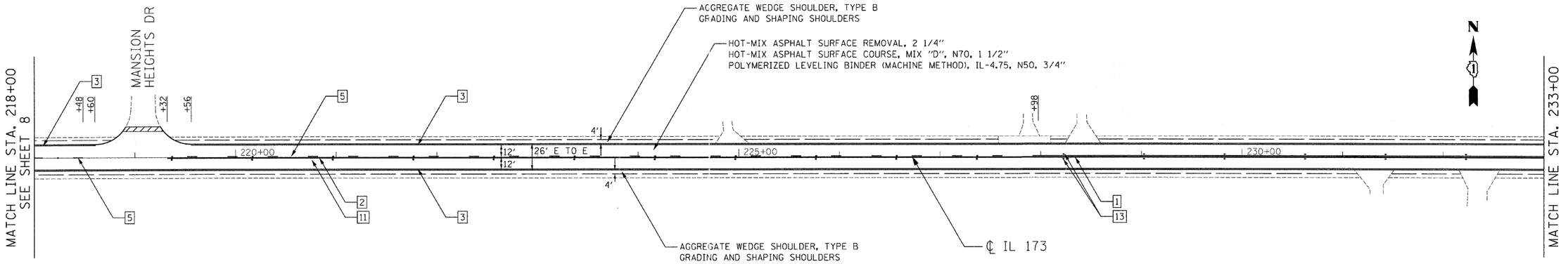

LEGEND:

1. THERMOPLASTIC PAVEMENT MARKING - LINE 4" (DOUBLE YELLOW SOLID LINE 11" C-C)
2. THERMOPLASTIC PAVEMENT MARKING - LINE 4" (YELLOW SOLID LINE)
3. THERMOPLASTIC PAVEMENT MARKING - LINE 4" (WHITE EDGE LINE)
4. THERMOPLASTIC PAVEMENT MARKING - LINE 4" (YELLOW LANE LINE - 10' DASH, 30' SKIP) WITH RAISED REFLECTIVE PAVEMENT MARKERS (1 TWO-WAY AMBER MARKER) (40' C-C)
5. THERMOPLASTIC PAVEMENT MARKING - LINE 4" (YELLOW LANE LINE - 10' DASH, 30' SKIP) WITH RAISED REFLECTIVE PAVEMENT MARKERS (1 TWO-WAY AMBER MARKER) (80' C-C)
6. THERMOPLASTIC PAVEMENT MARKING - LINE 6" (WHITE SOLID LINE)
7. THERMOPLASTIC PAVEMENT MARKING - LINE 12" (YELLOW DIAGONAL LINE)
8. THERMOPLASTIC PAVEMENT MARKING - LINE 24" (WHITE STOP LINE)
9. THERMOPLASTIC PAVEMENT MARKING - LETTERS AND SYMBOLS (TYP.)
10. RAISED REFLECTIVE PAVEMENT MARKERS (ONE-WAY AMBER MARKER) (40' C-C)
11. RAISED REFLECTIVE PAVEMENT MARKERS (ONE-WAY AMBER MARKER) (80' C-C)
12. RAISED REFLECTIVE PAVEMENT MARKERS (TWO-WAY AMBER MARKER) (40' C-C)
13. RAISED REFLECTIVE PAVEMENT MARKERS (TWO-WAY AMBER MARKER) (80' C-C)
14. RAISED REFLECTIVE PAVEMENT MARKERS (ONE-WAY CRYSTAL MARKER) (40' C-C)

HOT-MIX ASPHALT SURFACE REMOVAL - BUTT JOINT
TEMPORARY RAMP

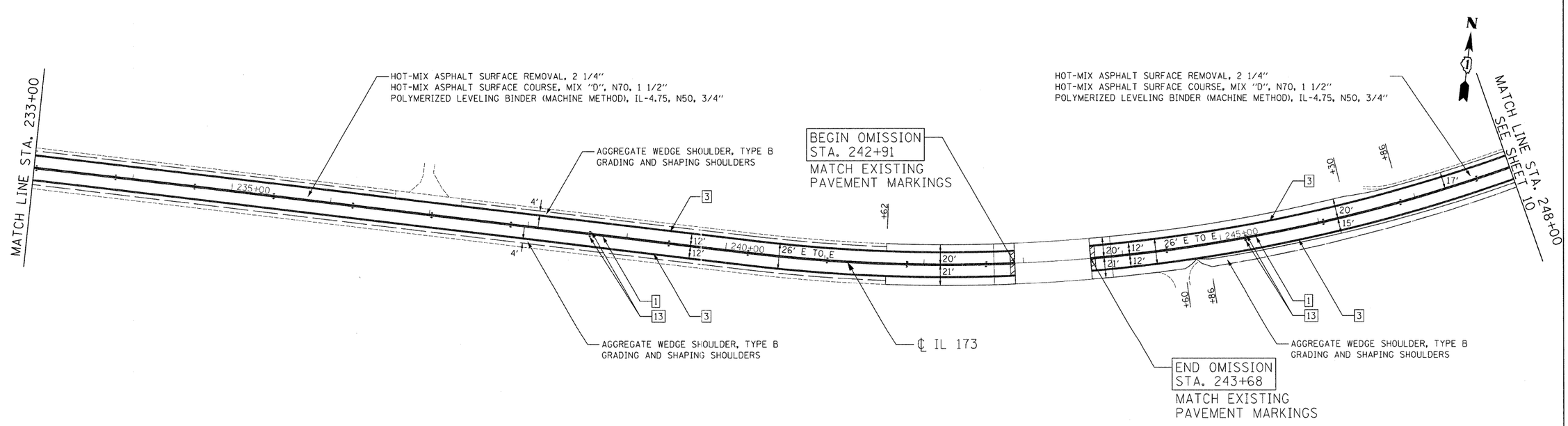

HOT-MIX ASPHALT SURFACE REMOVAL - BUTT JOINT
TEMPORARY RAMP

FILE NAME = c:\proj\3368\3368_21\design\proposedplan\3368_21-Prop05.dgn

Ciorba Group, Inc. CONSULTING ENGINEERS 5507 North Cumberland Avenue, Suite 402 Chicago, Illinois 60656 Tel. 773.775.4009 Fax 773.775.4014	USER NAME = alau	DESIGNED - DD	REVISED -	STATE OF ILLINOIS DEPARTMENT OF TRANSPORTATION	IL 173 ALDEN ROAD TO US 12 PROPOSED ROADWAY AND PAVEMENT MARKING PLAN	F.A.P. RTE.	SECTION	COUNTY	TOTAL SHEETS	SHEET NO.
		DRAWN - RJR	REVISED -			303	(132, 133 & 134) RS-5	MCHENRY	36	9
	PLOT SCALE = 50.0000 ' / IN.	CHECKED - SNS	REVISED -					CONTRACT NO. 62496		
	PLOT DATE = 4/21/2009	DATE - 4/22/09	REVISED -		SCALE: 1"=50' SHEET NO. 9 OF 36 SHEETS STA. 218+00 TO STA. 248+00	FED. ROAD DIST. NO. 1	ILLINOIS	FED. AID PROJECT		

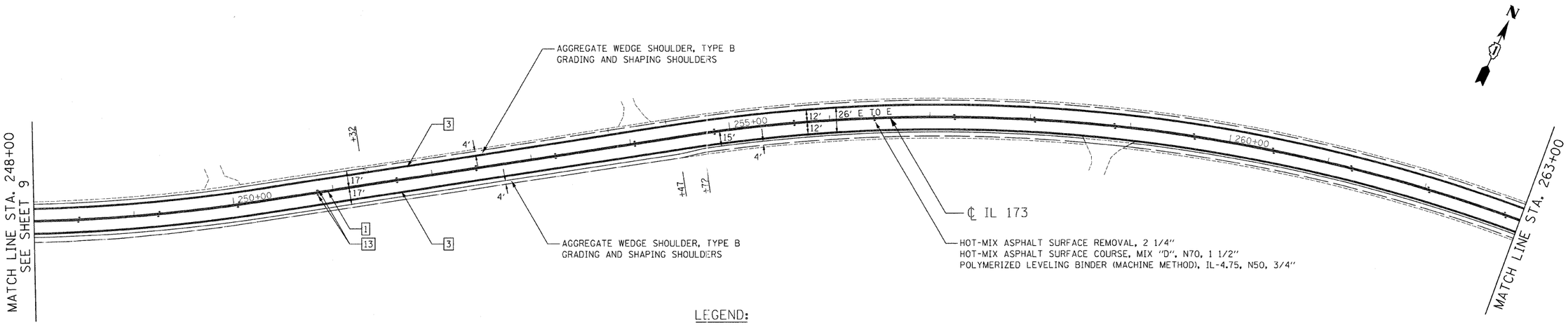

HOT-MIX ASPHALT SURFACE REMOVAL - BUTT JOINT
TEMPORARY RAMP

LEGEND:

1. THERMOPLASTIC PAVEMENT MARKING - LINE 4" (DOUBLE YELLOW SOLID LINE 11" C-C)
2. THERMOPLASTIC PAVEMENT MARKING - LINE 4" (YELLOW SOLID LINE)
3. THERMOPLASTIC PAVEMENT MARKING - LINE 4" (WHITE EDGE LINE)
4. THERMOPLASTIC PAVEMENT MARKING - LINE 4" (YELLOW LANE LINE - 10' DASH, 30' SKIP) WITH RAISED REFLECTIVE PAVEMENT MARKERS (1 TWO-WAY AMBER MARKER) (40' C-C)
5. THERMOPLASTIC PAVEMENT MARKING - LINE 4" (YELLOW LANE LINE - 10' DASH, 30' SKIP) WITH RAISED REFLECTIVE PAVEMENT MARKERS (1 TWO-WAY AMBER MARKER) (80' C-C)
6. THERMOPLASTIC PAVEMENT MARKING - LINE 6" (WHITE SOLID LINE)
7. THERMOPLASTIC PAVEMENT MARKING - LINE 12" (YELLOW DIAGONAL LINE)
8. THERMOPLASTIC PAVEMENT MARKING - LINE 24" (WHITE STOP LINE)
9. THERMOPLASTIC PAVEMENT MARKING - LETTERS AND SYMBOLS (TYP.)
10. RAISED REFLECTIVE PAVEMENT MARKERS (ONE-WAY AMBER MARKER) (40' C-C)
11. RAISED REFLECTIVE PAVEMENT MARKERS (ONE-WAY AMBER MARKER) (80' C-C)
12. RAISED REFLECTIVE PAVEMENT MARKERS (TWO-WAY AMBER MARKER) (40' C-C)
13. RAISED REFLECTIVE PAVEMENT MARKERS (TWO-WAY AMBER MARKER) (80' C-C)
14. RAISED REFLECTIVE PAVEMENT MARKERS (ONE-WAY CRYSTAL MARKER) (40' C-C)

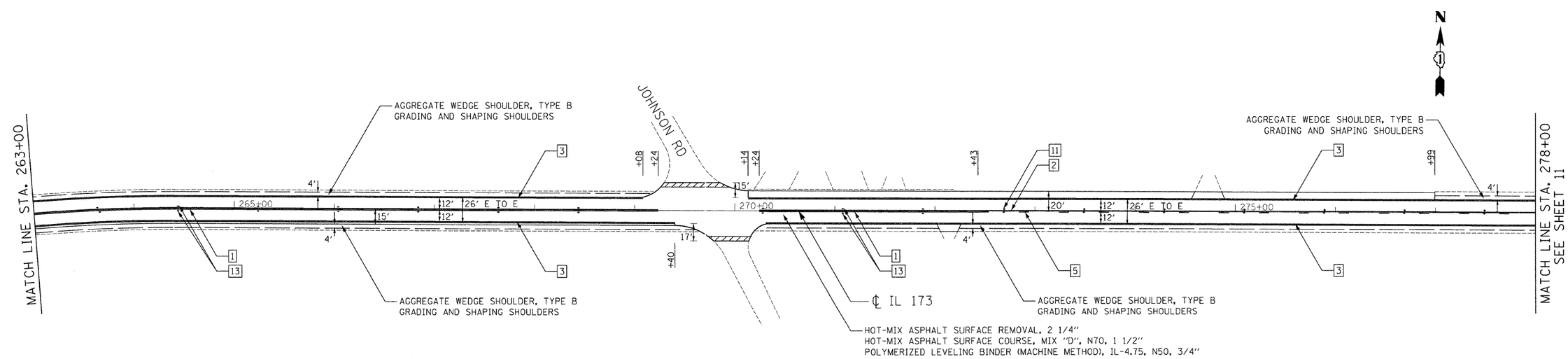

HOT-MIX ASPHALT SURFACE REMOVAL - BUTT JOINT
TEMPORARY RAMP

FILE NAME = m:\proj\3368\3368.21\design\proposedplan\3368.21-Prop06.dgn

Ciorba Group, Inc.
CONSULTING ENGINEERS
5507 North Cumberland Avenue, Suite 402
Chicago, Illinois 60656
Tel. 773.775.4009 Fax 773.775.4014

USER NAME = alau	DESIGNED - DD	REVISED -	
	DRAWN - RJR	REVISED -	
PLOT SCALE = 50.0000 ' / IN.	CHECKED - SNS	REVISED -	
PLOT DATE = 4/21/2009	DATE - 4/22/09	REVISED -	

STATE OF ILLINOIS
DEPARTMENT OF TRANSPORTATION

IL 173
ALDEN ROAD TO US 12
PROPOSED ROADWAY AND PAVEMENT MARKING PLAN

SCALE: 1"=50' | SHEET NO. 10 OF 36 SHEETS | STA. 248+00 TO STA. 278+00

F.A.P. RTE.	SECTION	COUNTY	TOTAL SHEETS	SHEET NO.
303	(132, 133 & 134) RS-5	MCHENRY	36	10
		CONTRACT NO. 62496		

FED. ROAD DIST. NO. 1 | ILLINOIS | FED. AID PROJECT

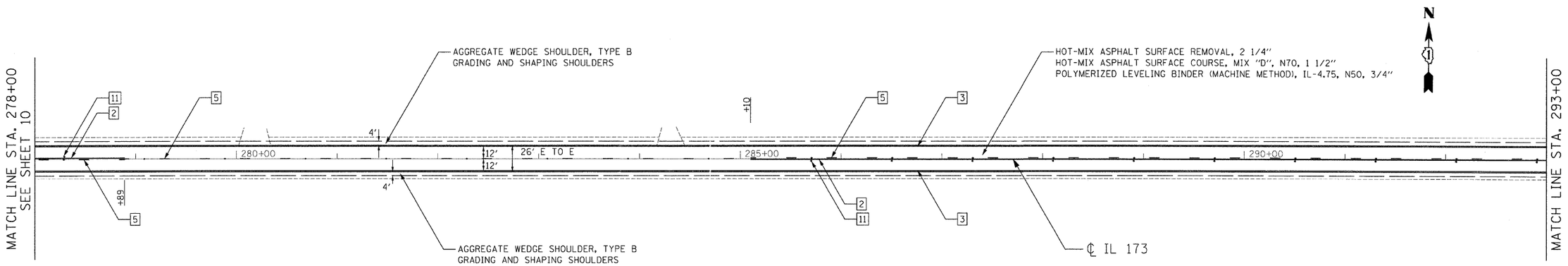

LEGEND:

1. THERMOPLASTIC PAVEMENT MARKING - LINE 4" (DOUBLE YELLOW SOLID LINE 11" C-C)
2. THERMOPLASTIC PAVEMENT MARKING - LINE 4" (YELLOW SOLID LINE)
3. THERMOPLASTIC PAVEMENT MARKING - LINE 4" (WHITE EDGE LINE)
4. THERMOPLASTIC PAVEMENT MARKING - LINE 4" (YELLOW LANE LINE - 10' DASH, 30' SKIP) WITH RAISED REFLECTIVE PAVEMENT MARKERS (1 TWO-WAY AMBER MARKER) (40' C-C)
5. THERMOPLASTIC PAVEMENT MARKING - LINE 4" (YELLOW LANE LINE - 10' DASH, 30' SKIP) WITH RAISED REFLECTIVE PAVEMENT MARKERS (1 TWO-WAY AMBER MARKER) (80' C-C)
6. THERMOPLASTIC PAVEMENT MARKING - LINE 6" (WHITE SOLID LINE)
7. THERMOPLASTIC PAVEMENT MARKING - LINE 12" (YELLOW DIAGONAL LINE)
8. THERMOPLASTIC PAVEMENT MARKING - LINE 24" (WHITE STOP LINE)
9. THERMOPLASTIC PAVEMENT MARKING - LETTERS AND SYMBOLS (TYP.)
10. RAISED REFLECTIVE PAVEMENT MARKERS (ONE-WAY AMBER MARKER) (40' C-C)
11. RAISED REFLECTIVE PAVEMENT MARKERS (ONE-WAY AMBER MARKER) (80' C-C)
12. RAISED REFLECTIVE PAVEMENT MARKERS (TWO-WAY AMBER MARKER) (40' C-C)
13. RAISED REFLECTIVE PAVEMENT MARKERS (TWO-WAY AMBER MARKER) (80' C-C)
14. RAISED REFLECTIVE PAVEMENT MARKERS (ONE-WAY CRYSTAL MARKER) (40' C-C)

HOT-MIX ASPHALT SURFACE REMOVAL - BUTT JOINT
TEMPORARY RAMP

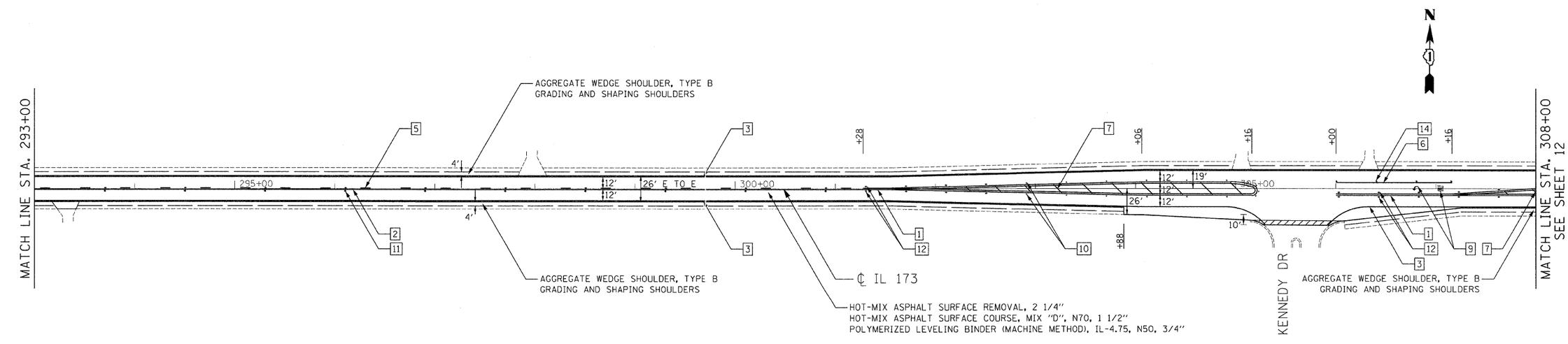

HOT-MIX ASPHALT SURFACE REMOVAL - BUTT JOINT
TEMPORARY RAMP

FILE NAME = m:\proj\3368\3368.21\dsign\proposedplan\3368.21-Prop87.dgn

Ciorba Group, Inc.
CONSULTING ENGINEERS
5507 North Cumberland Avenue, Suite 402
Chicago, Illinois 60656
Tel. 773.775.4009 Fax 773.775.4014

USER NAME = alau	DESIGNED - DD	REVISED -	
	DRAWN - RJR	REVISED -	
PLOT SCALE = 50.0000 ' / IN.	CHECKED - SNS	REVISED -	
PLOT DATE = 4/21/2009	DATE - 4/22/09	REVISED -	

STATE OF ILLINOIS
DEPARTMENT OF TRANSPORTATION

IL 173
ALDEN ROAD TO US 12
PROPOSED ROADWAY AND PAVEMENT MARKING PLAN

SCALE: 1"=50' | SHEET NO. 11 OF 36 SHEETS | STA. 278+00 TO STA. 308+00

F.A.P. RTE.	SECTION	COUNTY	TOTAL SHEETS	SHEET NO.
303	(132, 133 & 134) RS-5	MCHENRY	36	11
		CONTRACT NO. 62496		

FED. ROAD DIST. NO. 1 | ILLINOIS | FED. AID PROJECT

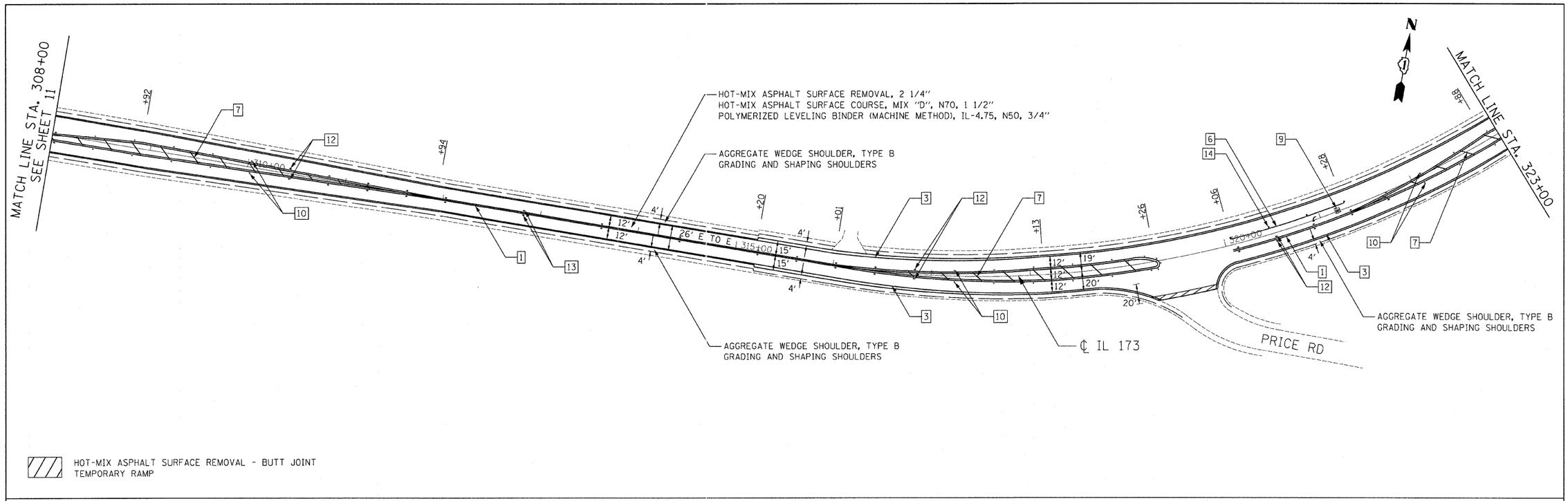

LEGEND:

1. THERMOPLASTIC PAVEMENT MARKING - LINE 4" (DOUBLE YELLOW SOLID LINE 11" C-C)
2. THERMOPLASTIC PAVEMENT MARKING - LINE 4" (YELLOW SOLID LINE)
3. THERMOPLASTIC PAVEMENT MARKING - LINE 4" (WHITE EDGE LINE)
4. THERMOPLASTIC PAVEMENT MARKING - LINE 4" (YELLOW LANE LINE - 10' DASH, 30' SKIP) WITH RAISED REFLECTIVE PAVEMENT MARKERS (1 TWO-WAY AMBER MARKER) (40' C-C)
5. THERMOPLASTIC PAVEMENT MARKING - LINE 4" (YELLOW LANE LINE - 10' DASH, 30' SKIP) WITH RAISED REFLECTIVE PAVEMENT MARKERS (1 TWO-WAY AMBER MARKER) (80' C-C)
6. THERMOPLASTIC PAVEMENT MARKING - LINE 6" (WHITE SOLID LINE)
7. THERMOPLASTIC PAVEMENT MARKING - LINE 12" (YELLOW DIAGONAL LINE)
8. THERMOPLASTIC PAVEMENT MARKING - LINE 24" (WHITE STOP LINE)
9. THERMOPLASTIC PAVEMENT MARKING - LETTERS AND SYMBOLS (TYP.)
10. RAISED REFLECTIVE PAVEMENT MARKERS (ONE-WAY AMBER MARKER) (40' C-C)
11. RAISED REFLECTIVE PAVEMENT MARKERS (ONE-WAY AMBER MARKER) (80' C-C)
12. RAISED REFLECTIVE PAVEMENT MARKERS (TWO-WAY AMBER MARKER) (40' C-C)
13. RAISED REFLECTIVE PAVEMENT MARKERS (TWO-WAY AMBER MARKER) (80' C-C)
14. RAISED REFLECTIVE PAVEMENT MARKERS (ONE-WAY CRYSTAL MARKER) (40' C-C)

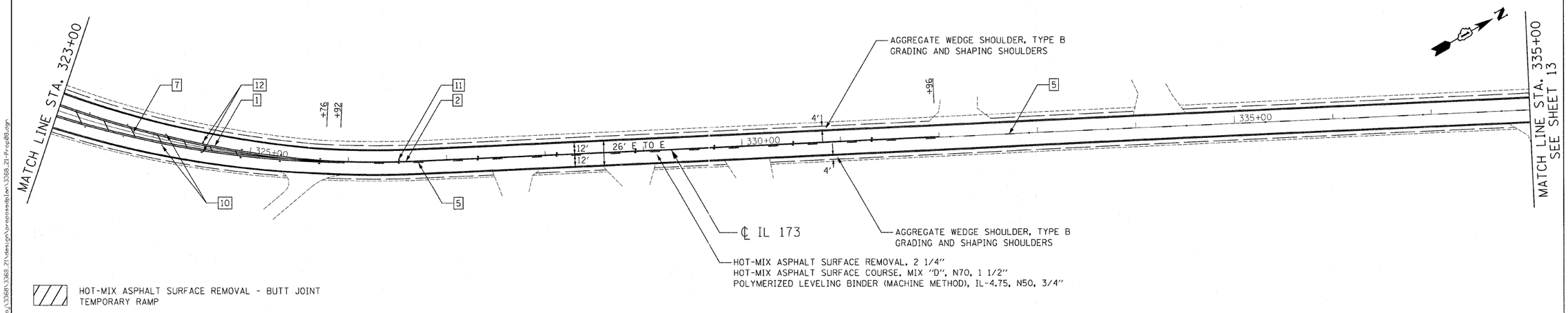

FILE NAME = c:\pwrg\33681\33681 21\design\proposedplan\33681 21-Prop08.dgn

Ciorba Group, Inc. CONSULTING ENGINEERS 5507 North Cumberland Avenue, Suite 402 Chicago, Illinois 60656 Tel. 773.775.4009 Fax 773.775.4014	USER NAME = olau	DESIGNED - DD	REVISED -	STATE OF ILLINOIS DEPARTMENT OF TRANSPORTATION	IL 173 ALDEN ROAD TO US 12 PROPOSED ROADWAY AND PAVEMENT MARKING PLAN	F.A.P. RTE.	SECTION	COUNTY	TOTAL SHEETS	SHEET NO.
		DRAWN - RJR	REVISED -			303	(132, 133 & 134) RS-5	MCHENRY	36	12
	PLOT SCALE = 50.0000 ' / IN.	CHECKED - SNS	REVISED -					CONTRACT NO. 62496		
	PLOT DATE = 4/21/2009	DATE - 4/22/09	REVISED -		SCALE: 1"=50' / SHEET NO. 12 OF 36 SHEETS / STA. 308+00 TO STA. 338+00	FED. ROAD DIST. NO. 1	ILLINOIS	FED. AID PROJECT		

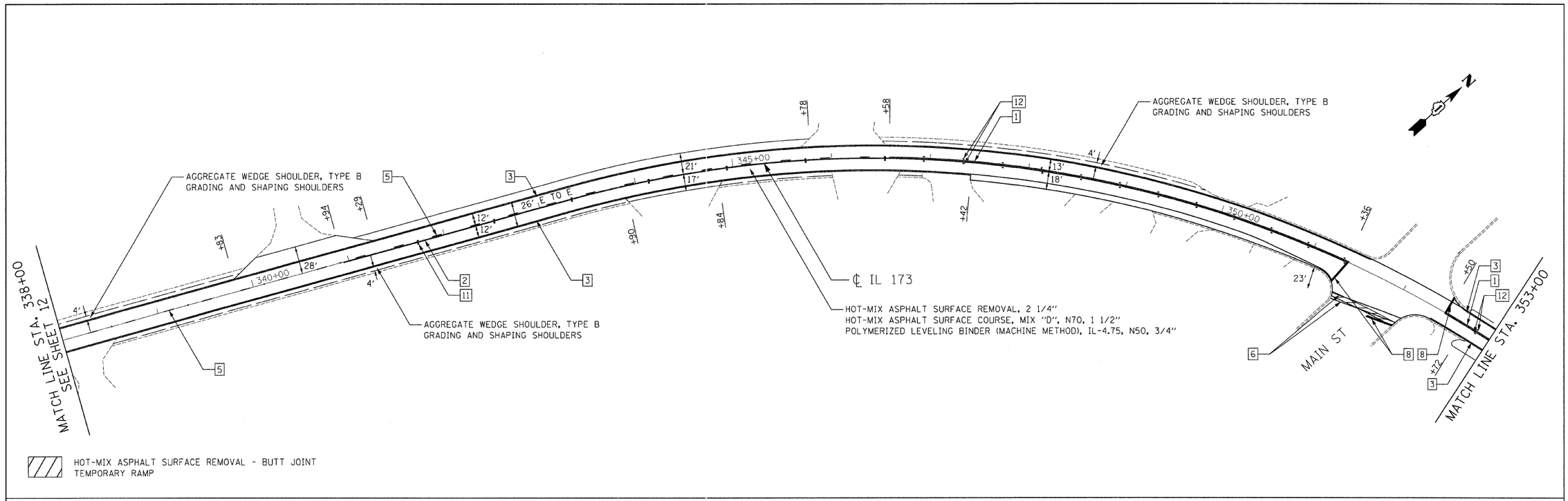

HOT-MIX ASPHALT SURFACE REMOVAL - BUTT JOINT
TEMPORARY RAMP

LEGEND:

1. THERMOPLASTIC PAVEMENT MARKING - LINE 4" (DOUBLE YELLOW SOLID LINE 11" C-C)
2. THERMOPLASTIC PAVEMENT MARKING - LINE 4" (YELLOW SOLID LINE)
3. THERMOPLASTIC PAVEMENT MARKING - LINE 4" (WHITE EDGE LINE)
4. THERMOPLASTIC PAVEMENT MARKING - LINE 4" (YELLOW LANE LINE - 10' DASH, 30' SKIP) WITH RAISED REFLECTIVE PAVEMENT MARKERS (1 TWO-WAY AMBER MARKER) (40' C-C)
5. THERMOPLASTIC PAVEMENT MARKING - LINE 4" (YELLOW LANE LINE - 10' DASH, 30' SKIP) WITH RAISED REFLECTIVE PAVEMENT MARKERS (1 TWO-WAY AMBER MARKER) (80' C-C)
6. THERMOPLASTIC PAVEMENT MARKING - LINE 6" (WHITE SOLID LINE)
7. THERMOPLASTIC PAVEMENT MARKING - LINE 12" (YELLOW DIAGONAL LINE)
8. THERMOPLASTIC PAVEMENT MARKING - LINE 24" (WHITE STOP LINE)
9. THERMOPLASTIC PAVEMENT MARKING - LETTERS AND SYMBOLS (TYP.)
10. RAISED REFLECTIVE PAVEMENT MARKERS (ONE-WAY AMBER MARKER) (40' C-C)
11. RAISED REFLECTIVE PAVEMENT MARKERS (ONE-WAY AMBER MARKER) (80' C-C)
12. RAISED REFLECTIVE PAVEMENT MARKERS (TWO-WAY AMBER MARKER) (40' C-C)
13. RAISED REFLECTIVE PAVEMENT MARKERS (TWO-WAY AMBER MARKER) (80' C-C)
14. RAISED REFLECTIVE PAVEMENT MARKERS (ONE-WAY CRYSTAL MARKER) (40' C-C)

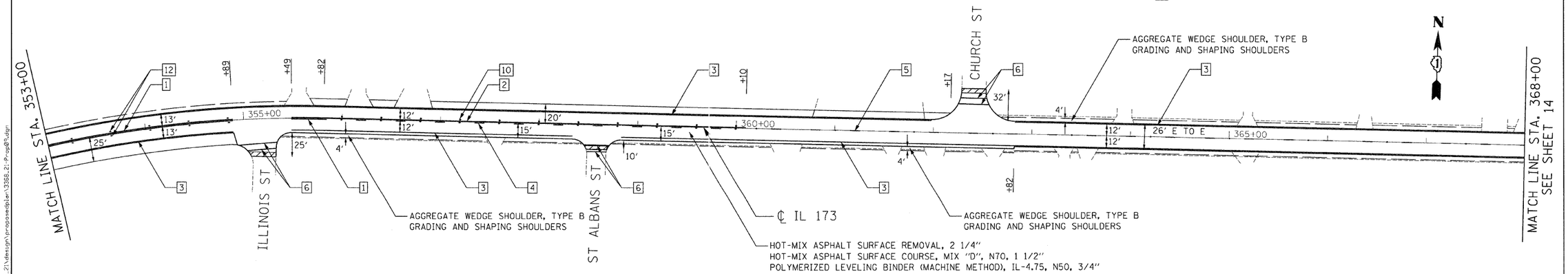

HOT-MIX ASPHALT SURFACE REMOVAL - BUTT JOINT
TEMPORARY RAMP

FILE NAME = n:\proj\3358\3358_21\design\proposedplan\3358_21-Prop07.dgn

Ciorba Group, Inc.
CONSULTING ENGINEERS
5507 North Cumberland Avenue, Suite 402
Chicago, Illinois 60656
Tel. 773.775.4009 Fax 773.775.4014

USER NAME = alau	DESIGNED - DD	REVISED -	
	DRAWN - RJR	REVISED -	
PLOT SCALE = 50.0000 ' / IN.	CHECKED - SNS	REVISED -	
PLOT DATE = 4/21/2009	DATE - 4/22/09	REVISED -	

STATE OF ILLINOIS
DEPARTMENT OF TRANSPORTATION

IL 173
ALDEN ROAD TO US 12
PROPOSED ROADWAY AND PAVEMENT MARKING PLAN

SCALE: 1"=50' | SHEET NO. 13 OF 36 SHEETS | STA. 338+00 TO STA. 368+00

F.A.P. RTE.	SECTION	COUNTY	TOTAL SHEETS	SHEET NO.
303	(132, 133 & 134) RS-5	MCHENRY	36	13
		CONTRACT NO. 62496		

FED. ROAD DIST. NO. 1 | ILLINOIS | FED. AID PROJECT

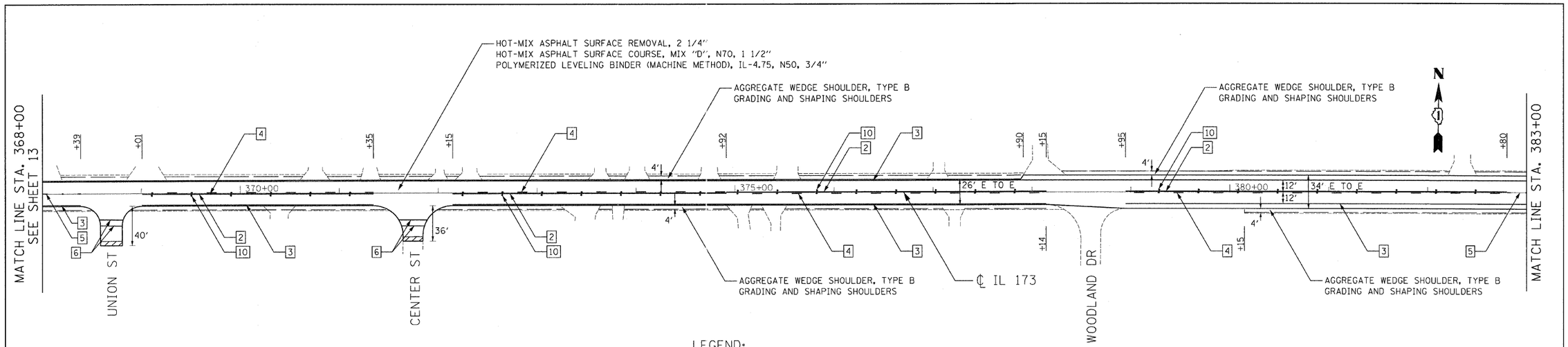

LEGEND:

1. THERMOPLASTIC PAVEMENT MARKING - LINE 4" (DOUBLE YELLOW SOLID LINE 11" C-C)
2. THERMOPLASTIC PAVEMENT MARKING - LINE 4" (YELLOW SOLID LINE)
3. THERMOPLASTIC PAVEMENT MARKING - LINE 4" (WHITE EDGE LINE)
4. THERMOPLASTIC PAVEMENT MARKING - LINE 4" (YELLOW LANE LINE - 10' DASH, 30' SKIP) WITH RAISED REFLECTIVE PAVEMENT MARKERS (1 TWO-WAY AMBER MARKER) (40' C-C)
5. THERMOPLASTIC PAVEMENT MARKING - LINE 4" (YELLOW LANE LINE - 10' DASH, 30' SKIP) WITH RAISED REFLECTIVE PAVEMENT MARKERS (1 TWO-WAY AMBER MARKER) (80' C-C)
6. THERMOPLASTIC PAVEMENT MARKING - LINE 6" (WHITE SOLID LINE)
7. THERMOPLASTIC PAVEMENT MARKING - LINE 12" (YELLOW DIAGONAL LINE)
8. THERMOPLASTIC PAVEMENT MARKING - LINE 24" (WHITE STOP LINE)
9. THERMOPLASTIC PAVEMENT MARKING - LETTERS AND SYMBOLS (TYP.)
10. RAISED REFLECTIVE PAVEMENT MARKERS (ONE-WAY AMBER MARKER) (40' C-C)
11. RAISED REFLECTIVE PAVEMENT MARKERS (ONE-WAY AMBER MARKER) (80' C-C)
12. RAISED REFLECTIVE PAVEMENT MARKERS (TWO-WAY AMBER MARKER) (40' C-C)
13. RAISED REFLECTIVE PAVEMENT MARKERS (TWO-WAY AMBER MARKER) (80' C-C)
14. RAISED REFLECTIVE PAVEMENT MARKERS (ONE-WAY CRYSTAL MARKER) (40' C-C)

HOT-MIX ASPHALT SURFACE REMOVAL - BUTT JOINT
TEMPORARY RAMP

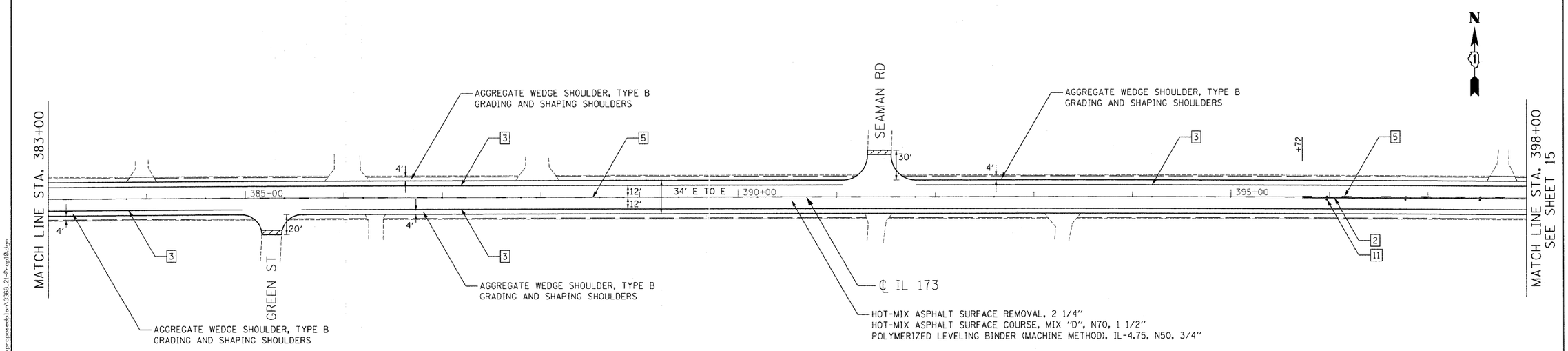

HOT-MIX ASPHALT SURFACE REMOVAL - BUTT JOINT
TEMPORARY RAMP

FILE NAME = r:\proj\13869\13869.21\design\proposedplan\13869.21-Prop18.dgn

Ciorba Group, Inc.
CONSULTING ENGINEERS
5507 North Cumberland Avenue, Suite 402
Chicago, Illinois 60656
Tel. 773.775.4009 Fax 773.775.4014

USER NAME = alau	DESIGNED - DD	REVISED -	
	DRAWN - RJR	REVISED -	
PLOT SCALE = 50.0000 ' / IN.	CHECKED - SNS	REVISED -	
PLOT DATE = 4/21/2009	DATE - 4/22/09	REVISED -	

STATE OF ILLINOIS
DEPARTMENT OF TRANSPORTATION

IL 173
ALDEN ROAD TO US 12
PROPOSED ROADWAY AND PAVEMENT MARKING PLAN

SCALE: 1"=50' | SHEET NO. 14 OF 36 SHEETS | STA. 368+00 TO STA. 398+00

F.A.P. RTE.	SECTION	COUNTY	TOTAL SHEETS	SHEET NO.
303	(132, 133 & 134) RS-5	MCHENRY	36	14
		CONTRACT NO. 62496		

FED. ROAD DIST. NO. 1 | ILLINOIS | FED. AID PROJECT

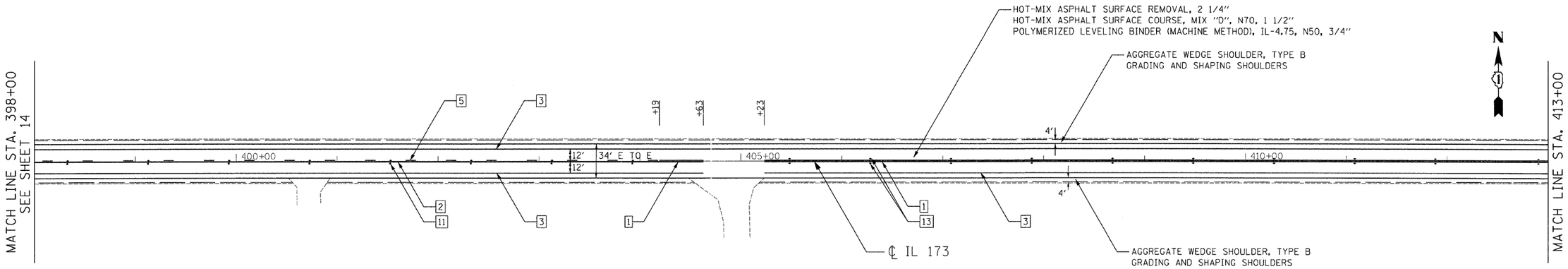

LEGEND:

1. THERMOPLASTIC PAVEMENT MARKING - LINE 4" (DOUBLE YELLOW SOLID LINE 11" C-C)
2. THERMOPLASTIC PAVEMENT MARKING - LINE 4" (YELLOW SOLID LINE)
3. THERMOPLASTIC PAVEMENT MARKING - LINE 4" (WHITE EDGE LINE)
4. THERMOPLASTIC PAVEMENT MARKING - LINE 4" (YELLOW LANE LINE - 10' DASH, 30' SKIP) WITH RAISED REFLECTIVE PAVEMENT MARKERS (1 TWO-WAY AMBER MARKER) (40' C-C)
5. THERMOPLASTIC PAVEMENT MARKING - LINE 4" (YELLOW LANE LINE - 10' DASH, 30' SKIP) WITH RAISED REFLECTIVE PAVEMENT MARKERS (1 TWO-WAY AMBER MARKER) (80' C-C)
6. THERMOPLASTIC PAVEMENT MARKING - LINE 6" (WHITE SOLID LINE)
7. THERMOPLASTIC PAVEMENT MARKING - LINE 12" (YELLOW DIAGONAL LINE)
8. THERMOPLASTIC PAVEMENT MARKING - LINE 24" (WHITE STOP LINE)
9. THERMOPLASTIC PAVEMENT MARKING - LETTERS AND SYMBOLS (TYP.)
10. RAISED REFLECTIVE PAVEMENT MARKERS (ONE-WAY AMBER MARKER) (40' C-C)
11. RAISED REFLECTIVE PAVEMENT MARKERS (ONE-WAY AMBER MARKER) (80' C-C)
12. RAISED REFLECTIVE PAVEMENT MARKERS (TWO-WAY AMBER MARKER) (40' C-C)
13. RAISED REFLECTIVE PAVEMENT MARKERS (TWO-WAY AMBER MARKER) (80' C-C)
14. RAISED REFLECTIVE PAVEMENT MARKERS (ONE-WAY CRYSTAL MARKER) (40' C-C)

HOT-MIX ASPHALT SURFACE REMOVAL - BUTT JOINT
TEMPORARY RAMP

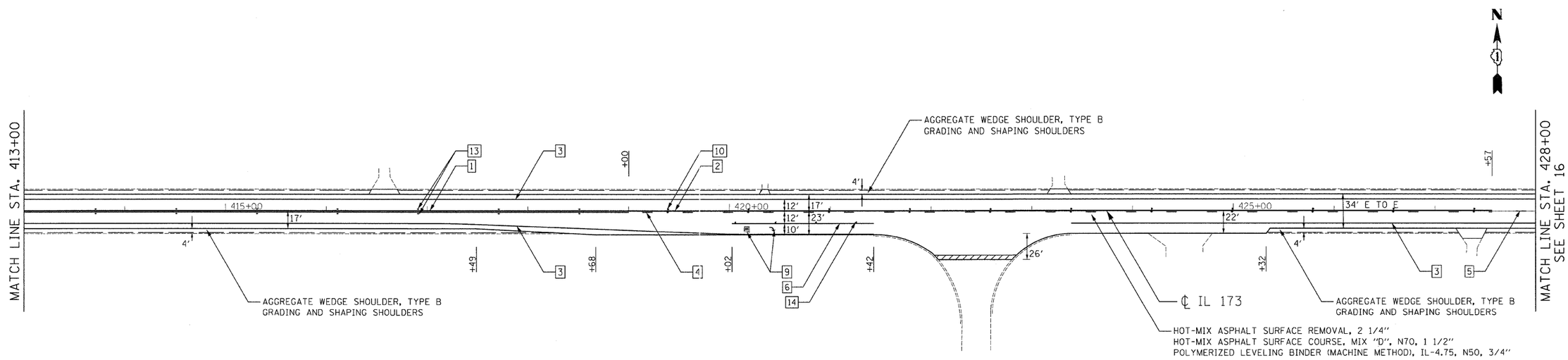

HOT-MIX ASPHALT SURFACE REMOVAL - BUTT JOINT
TEMPORARY RAMP

FILE NAME = n:\proj\33860\3860_21\design\progressplan\3860_21-Prepil.dgn

Ciorba Group, Inc.
CONSULTING ENGINEERS
5507 North Cumberland Avenue, Suite 402
Chicago, Illinois 60656
Tel. 773.775.4009 Fax 773.775.4014

USER NAME = alau	DESIGNED - DD	REVISED -	
	DRAWN - RJR	REVISED -	
PLOT SCALE = 50.0000 ' / IN.	CHECKED - SNS	REVISED -	
PLOT DATE = 4/21/2009	DATE - 4/22/09	REVISED -	

STATE OF ILLINOIS
DEPARTMENT OF TRANSPORTATION

IL 173
ALDEN ROAD TO US 12
PROPOSED ROADWAY AND PAVEMENT MARKING PLAN

SCALE: 1"=50' | SHEET NO. 15 OF 36 SHEETS | STA. 398+00 TO STA. 428+00

F.A.P. RTE.	SECTION	COUNTY	TOTAL SHEETS	SHEET NO.
303	(132, 133 & 134) RS-5	MCHENRY	36	15
		CONTRACT NO. 62496		

FED. ROAD DIST. NO. 1 | ILLINOIS | FED. AID PROJECT

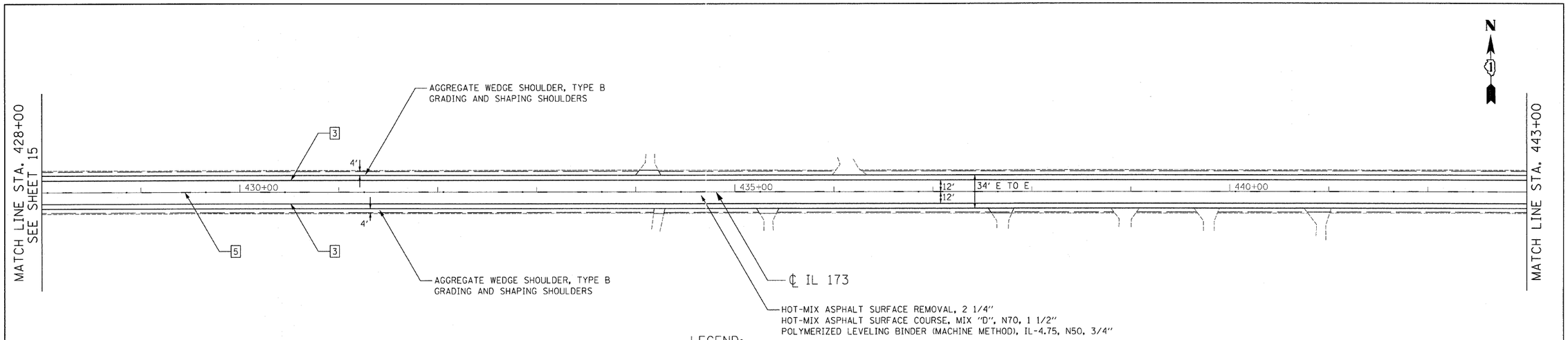

LEGEND:

1. THERMOPLASTIC PAVEMENT MARKING - LINE 4" (DOUBLE YELLOW SOLID LINE 11" C-C)
2. THERMOPLASTIC PAVEMENT MARKING - LINE 4" (YELLOW SOLID LINE)
3. THERMOPLASTIC PAVEMENT MARKING - LINE 4" (WHITE EDGE LINE)
4. THERMOPLASTIC PAVEMENT MARKING - LINE 4" (YELLOW LANE LINE - 10' DASH, 30' SKIP) WITH RAISED REFLECTIVE PAVEMENT MARKERS (1 TWO-WAY AMBER MARKER) (40' C-C)
5. THERMOPLASTIC PAVEMENT MARKING - LINE 4" (YELLOW LANE LINE - 10' DASH, 30' SKIP) WITH RAISED REFLECTIVE PAVEMENT MARKERS (1 TWO-WAY AMBER MARKER) (80' C-C)
6. THERMOPLASTIC PAVEMENT MARKING - LINE 6" (WHITE SOLID LINE)
7. THERMOPLASTIC PAVEMENT MARKING - LINE 12" (YELLOW DIAGONAL LINE)
8. THERMOPLASTIC PAVEMENT MARKING - LINE 24" (WHITE STOP LINE)
9. THERMOPLASTIC PAVEMENT MARKING - LETTERS AND SYMBOLS (TYP.)
10. RAISED REFLECTIVE PAVEMENT MARKERS (ONE-WAY AMBER MARKER) (40' C-C)
11. RAISED REFLECTIVE PAVEMENT MARKERS (ONE-WAY AMBER MARKER) (80' C-C)
12. RAISED REFLECTIVE PAVEMENT MARKERS (TWO-WAY AMBER MARKER) (40' C-C)
13. RAISED REFLECTIVE PAVEMENT MARKERS (TWO-WAY AMBER MARKER) (80' C-C)
14. RAISED REFLECTIVE PAVEMENT MARKERS (ONE-WAY CRYSTAL MARKER) (40' C-C)

HOT-MIX ASPHALT SURFACE REMOVAL - BUTT JOINT
TEMPORARY RAMP

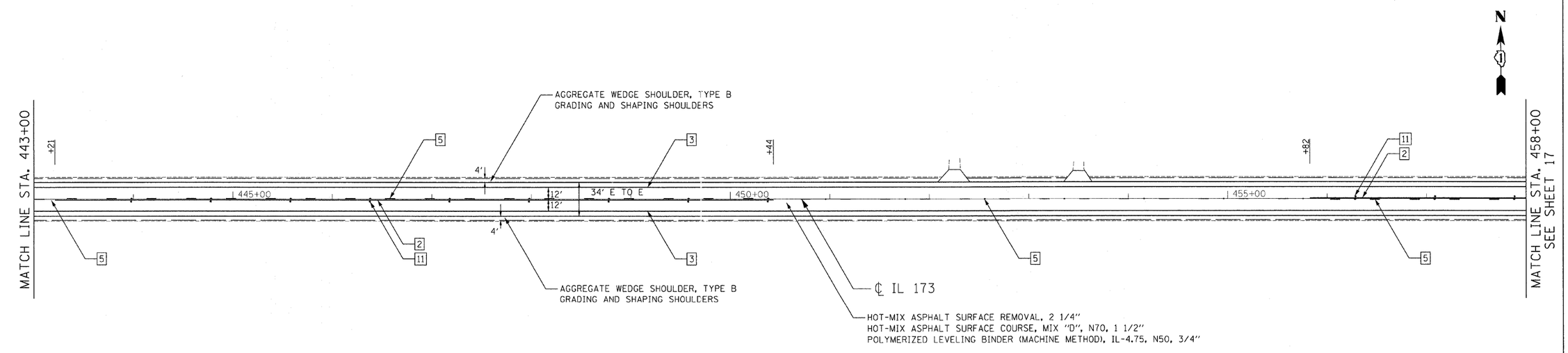

HOT-MIX ASPHALT SURFACE REMOVAL - BUTT JOINT
TEMPORARY RAMP

FILE NAME = n:\proj\3368\3368.21\design\proposed\plan\3368.21-Prop12.dgn

Ciorba Group, Inc.
CONSULTING ENGINEERS
5507 North Cumberland Avenue, Suite 402
Chicago, Illinois 60656
Tel. 773.775.4009 Fax 773.775.4014

USER NAME = alau	DESIGNED - DD	REVISED -	
	DRAWN - RJR	REVISED -	
PLOT SCALE = 50.0000 ' / IN.	CHECKED - SNS	REVISED -	
PLOT DATE = 4/21/2009	DATE - 4/22/09	REVISED -	

STATE OF ILLINOIS
DEPARTMENT OF TRANSPORTATION

IL 173
ALDEN ROAD TO US 12
PROPOSED ROADWAY AND PAVEMENT MARKING PLAN

SCALE: 1"=50' | SHEET NO. 16 OF 36 SHEETS | STA. 428+00 TO STA. 458+00

F.A.P. RTE.	SECTION	COUNTY	TOTAL SHEETS	SHEET NO.
303	(132, 133 & 134) RS-5	MCHENRY	36	16
		CONTRACT NO. 62496		

FED. ROAD DIST. NO. 1 | ILLINOIS | FED. AID PROJECT

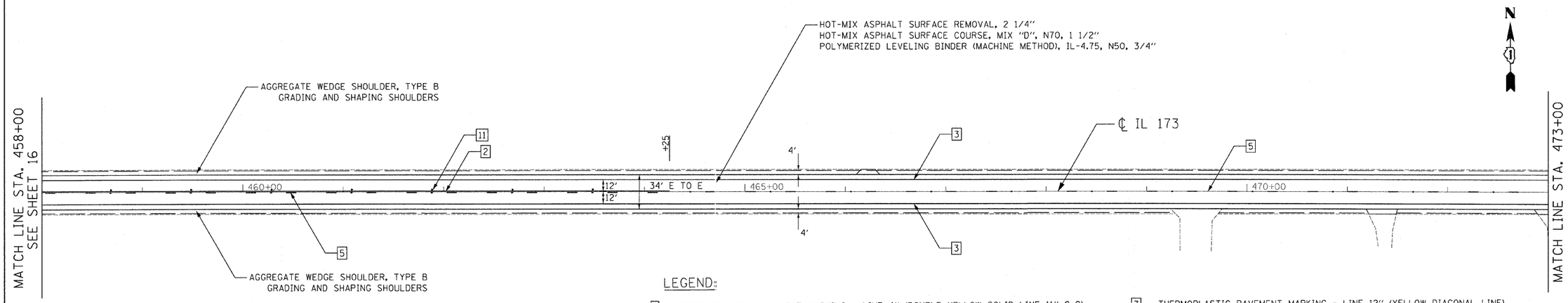

HOT-MIX ASPHALT SURFACE REMOVAL - BUTT JOINT
TEMPORARY RAMP

LEGEND:

1. THERMOPLASTIC PAVEMENT MARKING - LINE 4" (DOUBLE YELLOW SOLID LINE 11" C-C)
2. THERMOPLASTIC PAVEMENT MARKING - LINE 4" (YELLOW SOLID LINE)
3. THERMOPLASTIC PAVEMENT MARKING - LINE 4" (WHITE EDGE LINE)
4. THERMOPLASTIC PAVEMENT MARKING - LINE 4" (YELLOW LANE LINE - 10' DASH, 30' SKIP) WITH RAISED REFLECTIVE PAVEMENT MARKERS (1 TWO-WAY AMBER MARKER) (40' C-C)
5. THERMOPLASTIC PAVEMENT MARKING - LINE 4" (YELLOW LANE LINE - 10' DASH, 30' SKIP) WITH RAISED REFLECTIVE PAVEMENT MARKERS (1 TWO-WAY AMBER MARKER) (80' C-C)
6. THERMOPLASTIC PAVEMENT MARKING - LINE 6" (WHITE SOLID LINE)
7. THERMOPLASTIC PAVEMENT MARKING - LINE 12" (YELLOW DIAGONAL LINE)
8. THERMOPLASTIC PAVEMENT MARKING - LINE 24" (WHITE STOP LINE)
9. THERMOPLASTIC PAVEMENT MARKING - LETTERS AND SYMBOLS (TYP.)
10. RAISED REFLECTIVE PAVEMENT MARKERS (ONE-WAY AMBER MARKER) (40' C-C)
11. RAISED REFLECTIVE PAVEMENT MARKERS (ONE-WAY AMBER MARKER) (80' C-C)
12. RAISED REFLECTIVE PAVEMENT MARKERS (TWO-WAY AMBER MARKER) (40' C-C)
13. RAISED REFLECTIVE PAVEMENT MARKERS (TWO-WAY AMBER MARKER) (80' C-C)
14. RAISED REFLECTIVE PAVEMENT MARKERS (ONE-WAY CRYSTAL MARKER) (40' C-C)

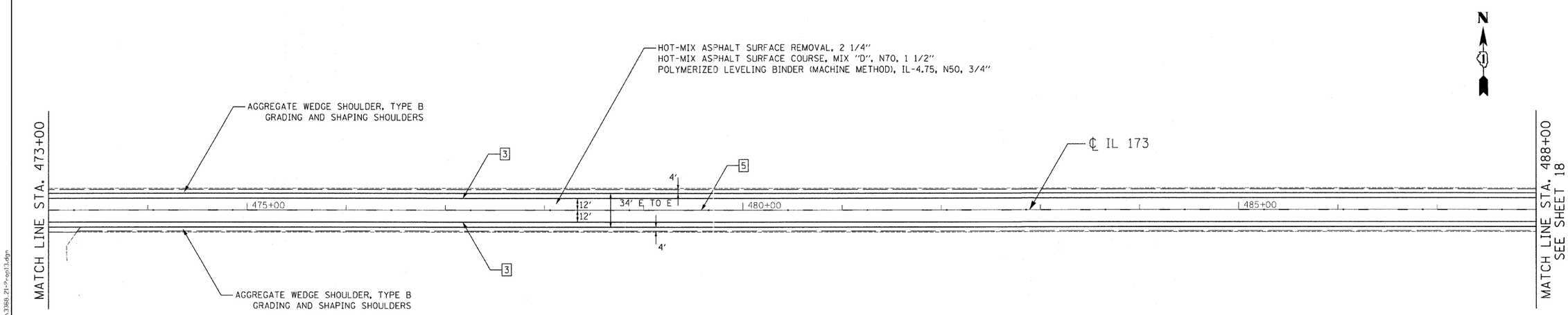

HOT-MIX ASPHALT SURFACE REMOVAL - BUTT JOINT
TEMPORARY RAMP

FILE NAME = c:\pwproj\3368\3368.21\design\pr-pavmkplan\3368.21-Proplb.dgn

Ciorba Group, Inc. CONSULTING ENGINEERS 5507 North Cumberland Avenue, Suite 402 Chicago, Illinois 60656 Tel. 773.775.4009 Fax 773.775.4014	USER NAME = alau	DESIGNED - DD	REVISED -	STATE OF ILLINOIS DEPARTMENT OF TRANSPORTATION	IL 173 ALDEN ROAD TO US 12 PROPOSED ROADWAY AND PAVEMENT MARKING PLAN	F.A.P. RTE.	SECTION	COUNTY	TOTAL SHEETS	SHEET NO.
		DRAWN - RJR	REVISED -			303	(132, 133 & 134) RS-5	MCHENRY	36	17
	PLOT SCALE = 50.0000 ' / IN.	CHECKED - SNS	REVISED -					CONTRACT NO. 62496		
	PLOT DATE = 4/21/2009	DATE - 4/22/09	REVISED -		SCALE: 1"=50' SHEET NO. 17 OF 36 SHEETS STA. 458+00 TO STA. 488+00	FED. ROAD DIST. NO. 1	ILLINOIS	FED. AID PROJECT		

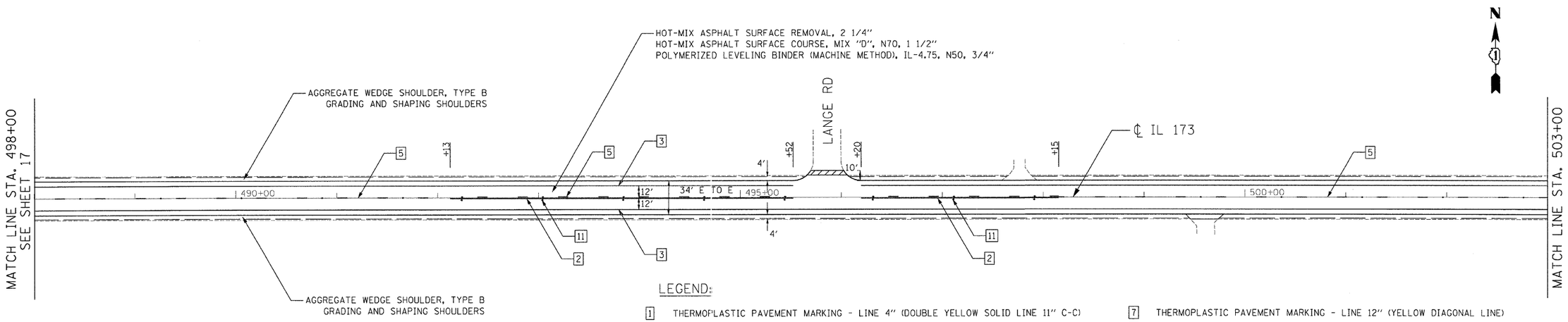

LEGEND:

1. THERMOPLASTIC PAVEMENT MARKING - LINE 4" (DOUBLE YELLOW SOLID LINE 11" C-C)
2. THERMOPLASTIC PAVEMENT MARKING - LINE 4" (YELLOW SOLID LINE)
3. THERMOPLASTIC PAVEMENT MARKING - LINE 4" (WHITE EDGE LINE)
4. THERMOPLASTIC PAVEMENT MARKING - LINE 4" (YELLOW LANE LINE - 10' DASH, 30' SKIP) WITH RAISED REFLECTIVE PAVEMENT MARKERS (1 TWO-WAY AMBER MARKER) (40' C-C)
5. THERMOPLASTIC PAVEMENT MARKING - LINE 4" (YELLOW LANE LINE - 10' DASH, 30' SKIP) WITH RAISED REFLECTIVE PAVEMENT MARKERS (1 TWO-WAY AMBER MARKER) (80' C-C)
6. THERMOPLASTIC PAVEMENT MARKING - LINE 6" (WHITE SOLID LINE)
7. THERMOPLASTIC PAVEMENT MARKING - LINE 12" (YELLOW DIAGONAL LINE)
8. THERMOPLASTIC PAVEMENT MARKING - LINE 24" (WHITE STOP LINE)
9. THERMOPLASTIC PAVEMENT MARKING - LETTERS AND SYMBOLS (TYP.)
10. RAISED REFLECTIVE PAVEMENT MARKERS (ONE-WAY AMBER MARKER) (40' C-C)
11. RAISED REFLECTIVE PAVEMENT MARKERS (ONE-WAY AMBER MARKER) (80' C-C)
12. RAISED REFLECTIVE PAVEMENT MARKERS (TWO-WAY AMBER MARKER) (40' C-C)
13. RAISED REFLECTIVE PAVEMENT MARKERS (TWO-WAY AMBER MARKER) (80' C-C)
14. RAISED REFLECTIVE PAVEMENT MARKERS (ONE-WAY CRYSTAL MARKER) (40' C-C)

HOT-MIX ASPHALT SURFACE REMOVAL - BUTT JOINT
TEMPORARY RAMP

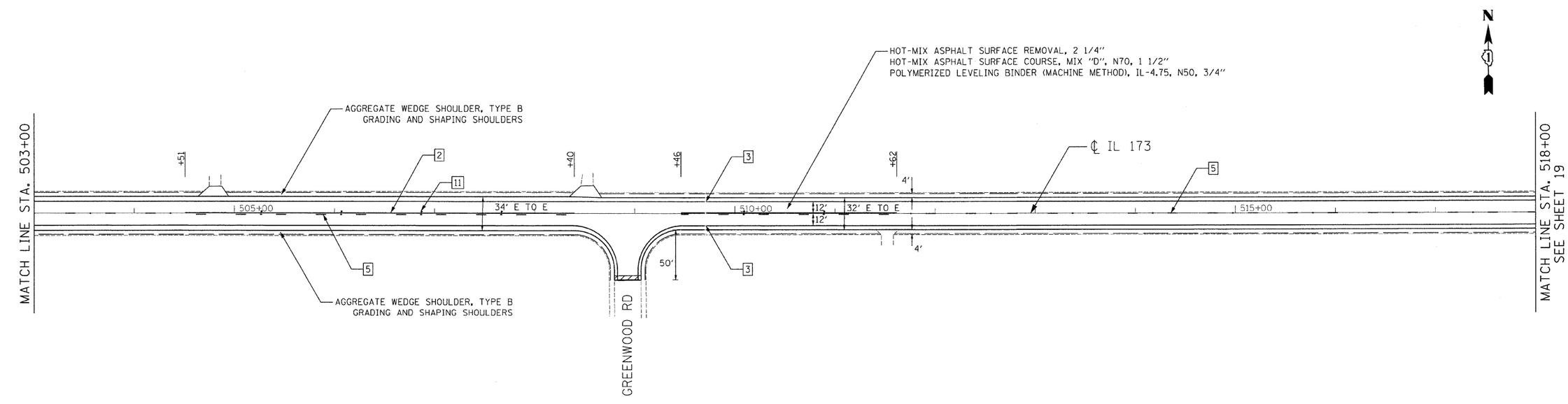

HOT-MIX ASPHALT SURFACE REMOVAL - BUTT JOINT
TEMPORARY RAMP

FILE NAME = n:\proj\3368\3368.21\design\proposedplan\3368.21.Prop14.dgn

Ciorba Group, Inc. CONSULTING ENGINEERS 5507 North Cumberland Avenue, Suite 402 Chicago, Illinois 60656 Tel. 773.775.4009 Fax 773.775.4014	USER NAME = alau	DESIGNED - DD	REVISED -	STATE OF ILLINOIS DEPARTMENT OF TRANSPORTATION	IL 173 ALDEN ROAD TO US 12 PROPOSED ROADWAY AND PAVEMENT MARKING PLAN	F.A.P. RTE.	SECTION	COUNTY	TOTAL SHEETS	SHEET NO.
		DRAWN - RJR	REVISED -			303	(132, 133 & 134) RS-5	MCHENRY	36	18
	PLOT SCALE = 50.0000 ' / IN.	CHECKED - SNS	REVISED -					CONTRACT NO. 62496		
	PLOT DATE = 4/21/2009	DATE - 4/22/09	REVISED -		SCALE: 1"=50' SHEET NO. 180F 36 SHEETS STA. 488+00 TO STA. 518+00	FED. ROAD DIST. NO. 1	ILLINOIS	FED. AID PROJECT		

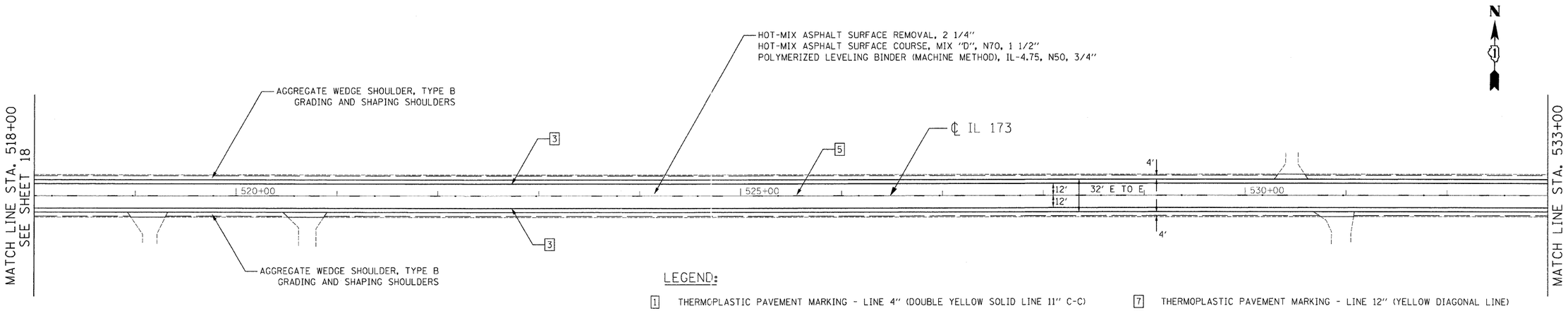

LEGEND:

1. THERMOPLASTIC PAVEMENT MARKING - LINE 4" (DOUBLE YELLOW SOLID LINE 11" C-C)
2. THERMOPLASTIC PAVEMENT MARKING - LINE 4" (YELLOW SOLID LINE)
3. THERMOPLASTIC PAVEMENT MARKING - LINE 4" (WHITE EDGE LINE)
4. THERMOPLASTIC PAVEMENT MARKING - LINE 4" (YELLOW LANE LINE - 10' DASH, 30' SKIP) WITH RAISED REFLECTIVE PAVEMENT MARKERS (1 TWO-WAY AMBER MARKER) (40' C-C)
5. THERMOPLASTIC PAVEMENT MARKING - LINE 4" (YELLOW LANE LINE - 10' DASH, 30' SKIP) WITH RAISED REFLECTIVE PAVEMENT MARKERS (1 TWO-WAY AMBER MARKER) (80' C-C)
6. THERMOPLASTIC PAVEMENT MARKING - LINE 6" (WHITE SOLID LINE)
7. THERMOPLASTIC PAVEMENT MARKING - LINE 12" (YELLOW DIAGONAL LINE)
8. THERMOPLASTIC PAVEMENT MARKING - LINE 24" (WHITE STOP LINE)
9. THERMOPLASTIC PAVEMENT MARKING - LETTERS AND SYMBOLS (TYP.)
10. RAISED REFLECTIVE PAVEMENT MARKERS (ONE-WAY AMBER MARKER) (40' C-C)
11. RAISED REFLECTIVE PAVEMENT MARKERS (ONE-WAY AMBER MARKER) (80' C-C)
12. RAISED REFLECTIVE PAVEMENT MARKERS (TWO-WAY AMBER MARKER) (40' C-C)
13. RAISED REFLECTIVE PAVEMENT MARKERS (TWO-WAY AMBER MARKER) (80' C-C)
14. RAISED REFLECTIVE PAVEMENT MARKERS (ONE-WAY CRYSTAL MARKER) (40' C-C)

HOT-MIX ASPHALT SURFACE REMOVAL - BUTT JOINT
TEMPORARY RAMP

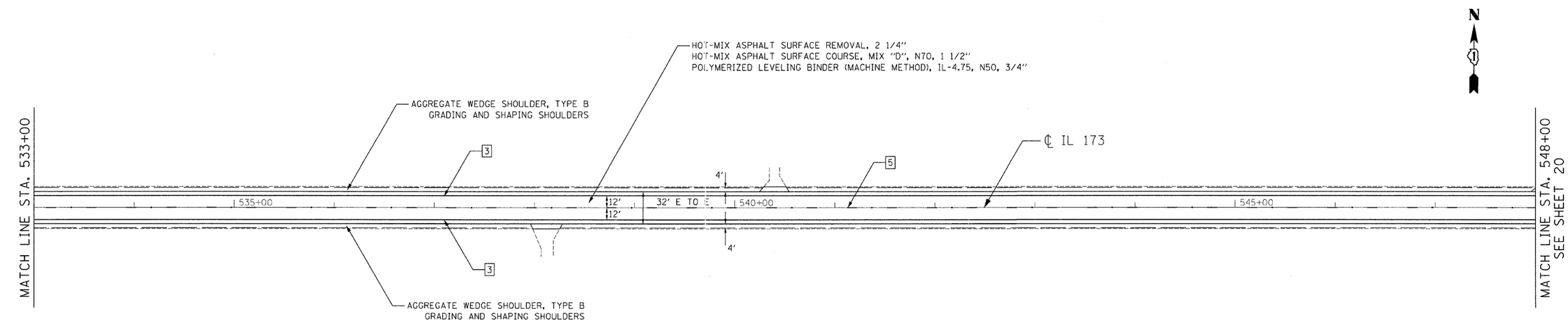

HOT-MIX ASPHALT SURFACE REMOVAL - BUTT JOINT
TEMPORARY RAMP

FILE NAME = c:\pw_n:\3368\3368.21\design\proposedplan\3368.21-Prop15.dgn

Ciorba Group, Inc.
CONSULTING ENGINEERS
5507 North Cumberland Avenue, Suite 402
Chicago, Illinois 60656
Tel. 773.775.4009 Fax 773.775.4014

USER NAME = oleu	DESIGNED - DD	REVISED -	
	DRAWN - RJR	REVISED -	
PLOT SCALE = 50.0000 ' / IN.	CHECKED - SNS	REVISED -	
PLOT DATE = 4/21/2009	DATE - 4/22/09	REVISED -	

STATE OF ILLINOIS
DEPARTMENT OF TRANSPORTATION

IL 173
ALDEN ROAD TO US 12
PROPOSED ROADWAY AND PAVEMENT MARKING PLAN

SCALE: 1"=50' | SHEET NO. 19OF 36 SHEETS | STA. 518+00 TO STA. 548+00

F.A.P. RTE.	SECTION	COUNTY	TOTAL SHEETS	SHEET NO.
303	(132, 133 & 134) RS-5	MCHENRY	36	19
		CONTRACT NO. 62496		

FED. ROAD DIST. NO. 1 | ILLINOIS | FED. AID PROJECT

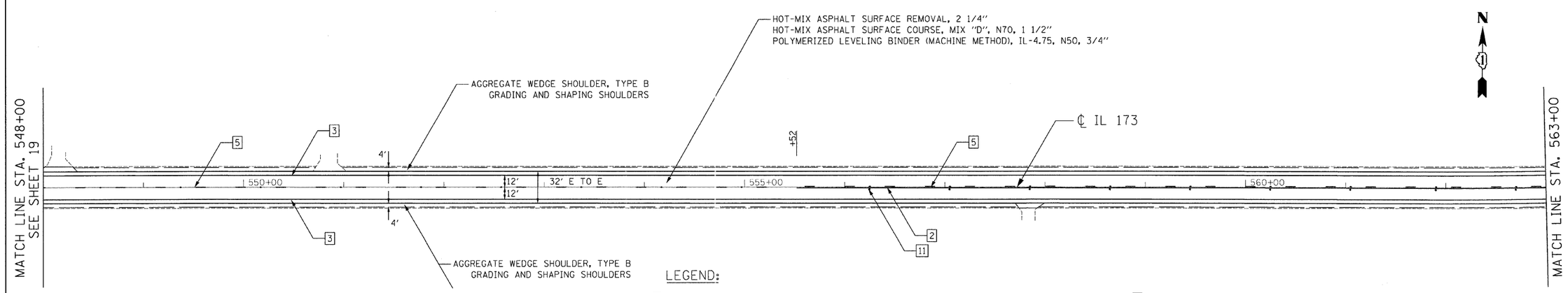

LEGEND:

1. THERMOPLASTIC PAVEMENT MARKING - LINE 4" (DOUBLE YELLOW SOLID LINE 11" C-C)
2. THERMOPLASTIC PAVEMENT MARKING - LINE 4" (YELLOW SOLID LINE)
3. THERMOPLASTIC PAVEMENT MARKING - LINE 4" (WHITE EDGE LINE)
4. THERMOPLASTIC PAVEMENT MARKING - LINE 4" (YELLOW LANE LINE - 10' DASH, 30' SKIP) WITH RAISED REFLECTIVE PAVEMENT MARKERS (1 TWO-WAY AMBER MARKER) (40' C-C)
5. THERMOPLASTIC PAVEMENT MARKING - LINE 4" (YELLOW LANE LINE - 10' DASH, 30' SKIP) WITH RAISED REFLECTIVE PAVEMENT MARKERS (1 TWO-WAY AMBER MARKER) (80' C-C)
6. THERMOPLASTIC PAVEMENT MARKING - LINE 6" (WHITE SOLID LINE)
7. THERMOPLASTIC PAVEMENT MARKING - LINE 12" (YELLOW DIAGONAL LINE)
8. THERMOPLASTIC PAVEMENT MARKING - LINE 24" (WHITE STOP LINE)
9. THERMOPLASTIC PAVEMENT MARKING - LETTERS AND SYMBOLS (TYP.)
10. RAISED REFLECTIVE PAVEMENT MARKERS (ONE-WAY AMBER MARKER) (40' C-C)
11. RAISED REFLECTIVE PAVEMENT MARKERS (ONE-WAY AMBER MARKER) (80' C-C)
12. RAISED REFLECTIVE PAVEMENT MARKERS (TWO-WAY AMBER MARKER) (40' C-C)
13. RAISED REFLECTIVE PAVEMENT MARKERS (TWO-WAY AMBER MARKER) (80' C-C)
14. RAISED REFLECTIVE PAVEMENT MARKERS (ONE-WAY CRYSTAL MARKER) (40' C-C)

HOT-MIX ASPHALT SURFACE REMOVAL - BUTT JOINT
TEMPORARY RAMP

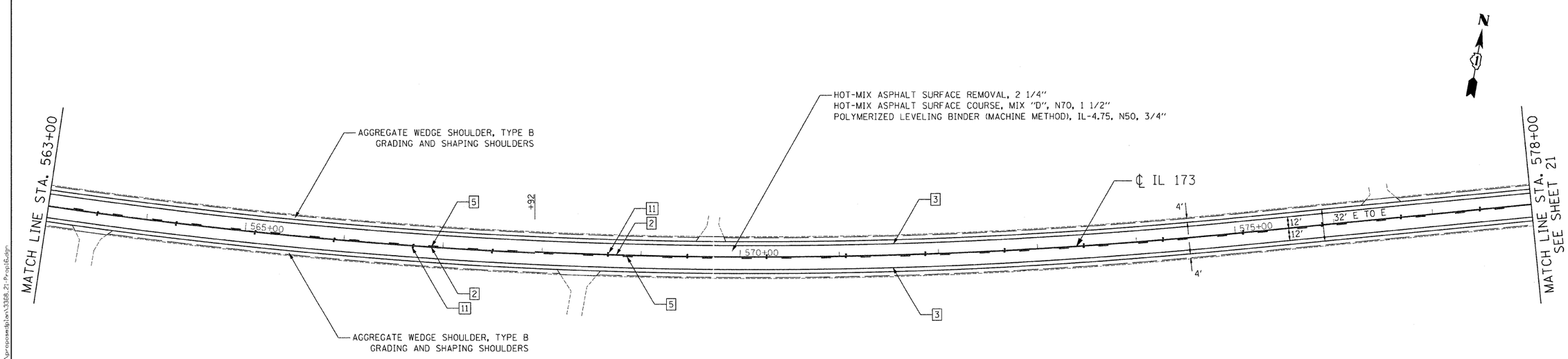

HOT-MIX ASPHALT SURFACE REMOVAL - BUTT JOINT
TEMPORARY RAMP

FILE NAME = n:\proj\3368\3368.21\design\proposedplan\3368.21-Prop16.dgn

Ciorba Group, Inc.
CONSULTING ENGINEERS
5507 North Cumberland Avenue, Suite 402
Chicago, Illinois 60656
Tel. 773.775.4009 Fax 773.775.4014

USER NAME = alau	DESIGNED - DD	REVISED -	
	DRAWN - RJR	REVISED -	
PLOT SCALE = 50.0000 ' / IN.	CHECKED - SNS	REVISED -	
PLOT DATE = 4/21/2009	DATE - 4/22/09	REVISED -	

STATE OF ILLINOIS
DEPARTMENT OF TRANSPORTATION

IL 173
ALDEN ROAD TO US 12
PROPOSED ROADWAY AND PAVEMENT MARKING PLAN

SCALE: 1"=50' | SHEET NO. 200F 36 SHEETS | STA. 548+00 TO STA. 578+00

F.A.P. RTE.	SECTION	COUNTY	TOTAL SHEETS	SHEET NO.
303	(132, 133 & 134) RS-5	MCHENRY	36	20
		CONTRACT NO. 62496		

FED. ROAD DIST. NO. 1 | ILLINOIS | FED. AID PROJECT

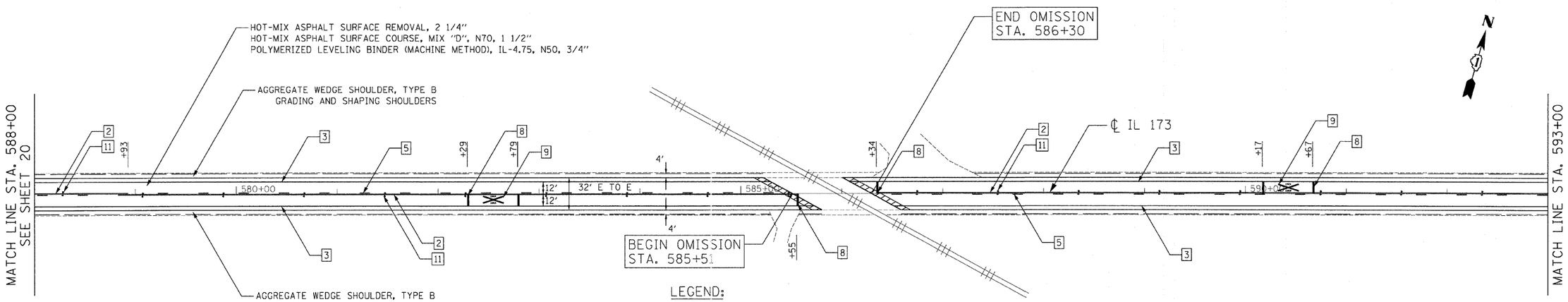

HOT-MIX ASPHALT SURFACE REMOVAL - BUTT JOINT
TEMPORARY RAMP

LEGEND:

1. THERMOPLASTIC PAVEMENT MARKING - LINE 4" (DOUBLE YELLOW SOLID LINE 11" C-C)
2. THERMOPLASTIC PAVEMENT MARKING - LINE 4" (YELLOW SOLID LINE)
3. THERMOPLASTIC PAVEMENT MARKING - LINE 4" (WHITE EDGE LINE)
4. THERMOPLASTIC PAVEMENT MARKING - LINE 4" (YELLOW LANE LINE - 10' DASH, 30' SKIP) WITH RAISED REFLECTIVE PAVEMENT MARKERS (1 TWO-WAY AMBER MARKER) (40' C-C)
5. THERMOPLASTIC PAVEMENT MARKING - LINE 4" (YELLOW LANE LINE - 10' DASH, 30' SKIP) WITH RAISED REFLECTIVE PAVEMENT MARKERS (1 TWO-WAY AMBER MARKER) (80' C-C)
6. THERMOPLASTIC PAVEMENT MARKING - LINE 6" (WHITE SOLID LINE)
7. THERMOPLASTIC PAVEMENT MARKING - LINE 12" (YELLOW DIAGONAL LINE)
8. THERMOPLASTIC PAVEMENT MARKING - LINE 24" (WHITE STOP LINE)
9. THERMOPLASTIC PAVEMENT MARKING - LETTERS AND SYMBOLS (TYP.)
10. RAISED REFLECTIVE PAVEMENT MARKERS (ONE-WAY AMBER MARKER) (40' C-C)
11. RAISED REFLECTIVE PAVEMENT MARKERS (ONE-WAY AMBER MARKER) (80' C-C)
12. RAISED REFLECTIVE PAVEMENT MARKERS (TWO-WAY AMBER MARKER) (40' C-C)
13. RAISED REFLECTIVE PAVEMENT MARKERS (TWO-WAY AMBER MARKER) (80' C-C)
14. RAISED REFLECTIVE PAVEMENT MARKERS (ONE-WAY CRYSTAL MARKER) (40' C-C)

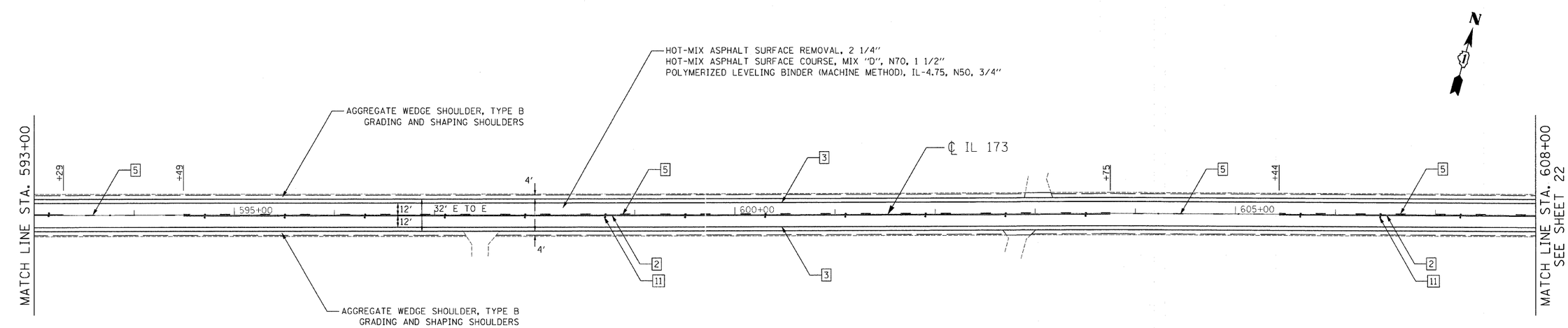

HOT-MIX ASPHALT SURFACE REMOVAL - BUTT JOINT
TEMPORARY RAMP

FILE NAME = n:\proj\3368\3368.21\design\proposedplan\3368.21-P-rp17.dgn

Ciorba Group, Inc.
CONSULTING ENGINEERS
5507 North Cumberland Avenue, Suite 402
Chicago, Illinois 60656
Tel. 773.775.4009 Fax 773.775.4014

USER NAME = alau	DESIGNED - DD	REVISED -	
	DRAWN - RJR	REVISED -	
PLOT SCALE = 50.0000 ' / IN.	CHECKED - SNS	REVISED -	
PLOT DATE = 4/21/2009	DATE - 4/22/09	REVISED -	

STATE OF ILLINOIS
DEPARTMENT OF TRANSPORTATION

IL 173
ALDEN ROAD TO US 12
PROPOSED ROADWAY AND PAVEMENT MARKING PLAN

SCALE: 1"=50' | SHEET NO. 21OF 36 SHEETS | STA. 578+00 TO STA. 608+00

F.A.P. RTE.	SECTION	COUNTY	TOTAL SHEETS	SHEET NO.
303	(132, 133 & 134) RS-5	MCHENRY	36	21
		CONTRACT NO. 62496		
FED. ROAD DIST. NO. 1	ILLINOIS	FED. AID PROJECT		

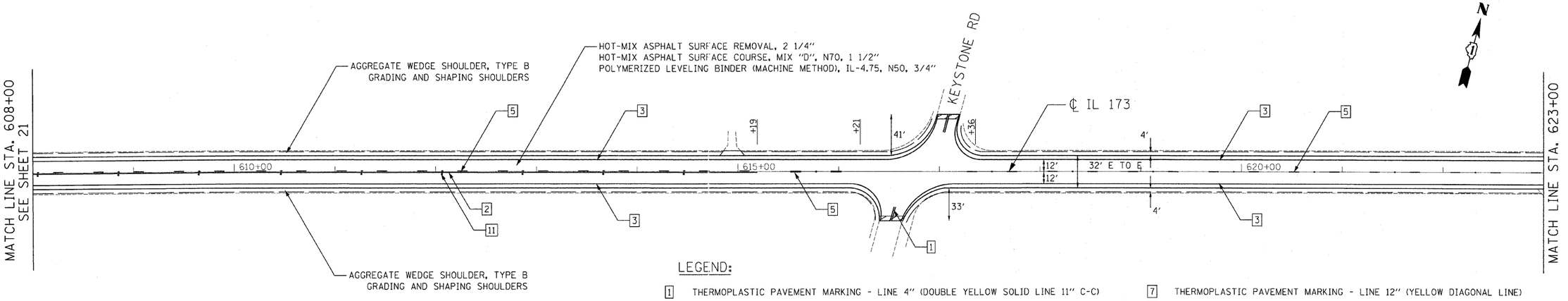

AGGREGATE WEDGE SHOULDER, TYPE B
GRADING AND SHAPING SHOULDERS

HOT-MIX ASPHALT SURFACE REMOVAL - BUTT JOINT
TEMPORARY RAMP

LEGEND:

1. THERMOPLASTIC PAVEMENT MARKING - LINE 4" (DOUBLE YELLOW SOLID LINE 11" C-C)
2. THERMOPLASTIC PAVEMENT MARKING - LINE 4" (YELLOW SOLID LINE)
3. THERMOPLASTIC PAVEMENT MARKING - LINE 4" (WHITE EDGE LINE)
4. THERMOPLASTIC PAVEMENT MARKING - LINE 4" (YELLOW LANE LINE - 10' DASH, 30' SKIP) WITH RAISED REFLECTIVE PAVEMENT MARKERS (1 TWO-WAY AMBER MARKER) (40' C-C)
5. THERMOPLASTIC PAVEMENT MARKING - LINE 4" (YELLOW LANE LINE - 10' DASH, 30' SKIP) WITH RAISED REFLECTIVE PAVEMENT MARKERS (1 TWO-WAY AMBER MARKER) (80' C-C)
6. THERMOPLASTIC PAVEMENT MARKING - LINE 6" (WHITE SOLID LINE)
7. THERMOPLASTIC PAVEMENT MARKING - LINE 12" (YELLOW DIAGONAL LINE)
8. THERMOPLASTIC PAVEMENT MARKING - LINE 24" (WHITE STOP LINE)
9. THERMOPLASTIC PAVEMENT MARKING - LETTERS AND SYMBOLS (TYP.)
10. RAISED REFLECTIVE PAVEMENT MARKERS (ONE-WAY AMBER MARKER) (40' C-C)
11. RAISED REFLECTIVE PAVEMENT MARKERS (ONE-WAY AMBER MARKER) (80' C-C)
12. RAISED REFLECTIVE PAVEMENT MARKERS (TWO-WAY AMBER MARKER) (40' C-C)
13. RAISED REFLECTIVE PAVEMENT MARKERS (TWO-WAY AMBER MARKER) (80' C-C)
14. RAISED REFLECTIVE PAVEMENT MARKERS (ONE-WAY CRYSTAL MARKER) (40' C-C)

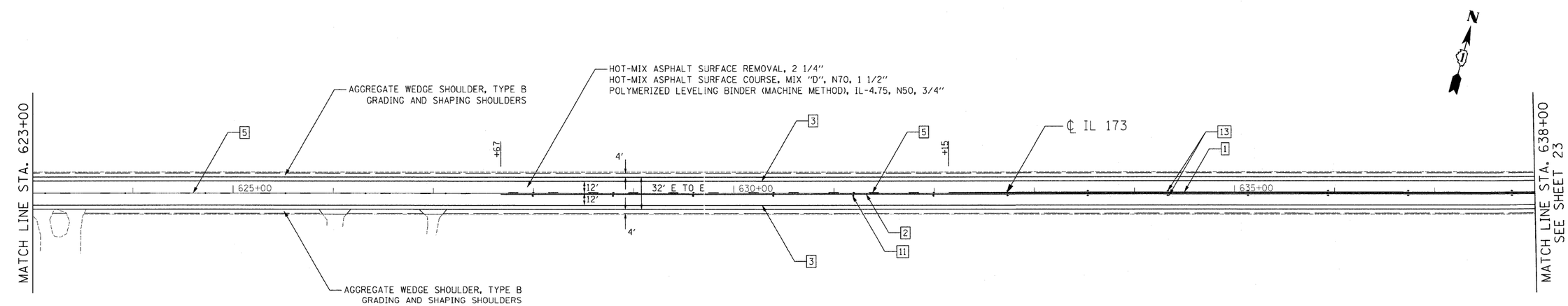

AGGREGATE WEDGE SHOULDER, TYPE B
GRADING AND SHAPING SHOULDERS

HOT-MIX ASPHALT SURFACE REMOVAL - BUTT JOINT
TEMPORARY RAMP

FILE NAME = n:\proj\3368\3368.21\dsn\pr\proposedplan\3368.21-Prop18.dgn

Ciorba Group, Inc.
CONSULTING ENGINEERS
5507 North Cumberland Avenue, Suite 402
Chicago, Illinois 60656
Tel. 773.775.4009 Fax 773.775.4014

USER NAME = alau	DESIGNED - DD	REVISED -	
	DRAWN - RJR	REVISED -	
PLOT SCALE = 50.0000 ' / IN.	CHECKED - SNS	REVISED -	
PLOT DATE = 4/21/2009	DATE - 4/22/09	REVISED -	

STATE OF ILLINOIS
DEPARTMENT OF TRANSPORTATION

IL 173
ALDEN ROAD TO US 12
PROPOSED ROADWAY AND PAVEMENT MARKING PLAN

SCALE: 1"=50' | SHEET NO. 22OF 36 SHEETS | STA. 608+00 TO STA. 638+00

F.A.P. RTE.	SECTION	COUNTY	TOTAL SHEETS	SHEET NO.
303	(132, 133 & 134) RS-5	MCHENRY	36	22
		CONTRACT NO. 62496		

FED. ROAD DIST. NO. 1 | ILLINOIS | FED. AID PROJECT

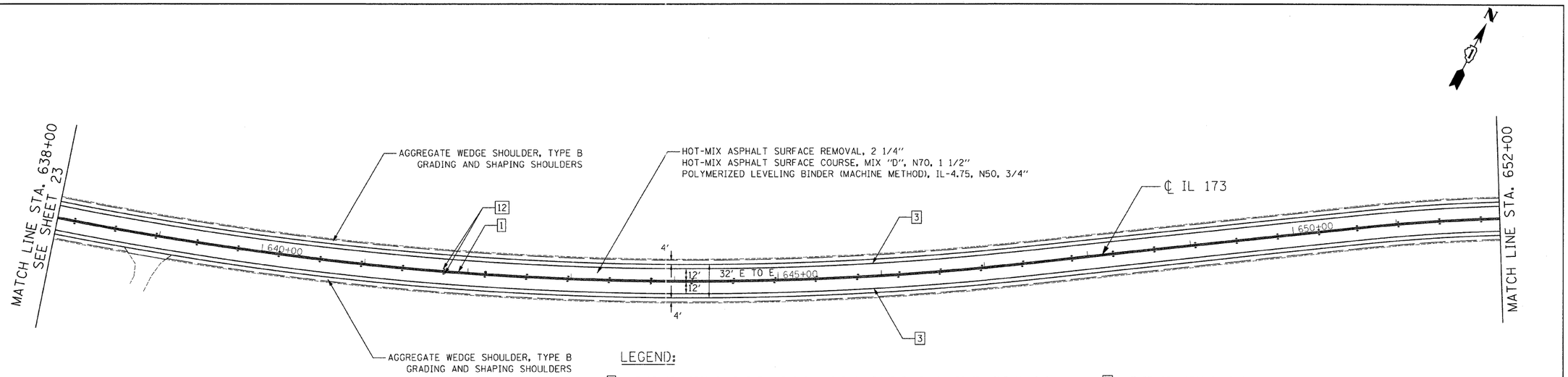

LEGEND:

1. THERMOPLASTIC PAVEMENT MARKING - LINE 4" (DOUBLE YELLOW SOLID LINE 11" C-C)
2. THERMOPLASTIC PAVEMENT MARKING - LINE 4" (YELLOW SOLID LINE)
3. THERMOPLASTIC PAVEMENT MARKING - LINE 4" (WHITE EDGE LINE)
4. THERMOPLASTIC PAVEMENT MARKING - LINE 4" (YELLOW LANE LINE - 10' DASH, 30' SKIP) WITH RAISED REFLECTIVE PAVEMENT MARKERS (1 TWO-WAY AMBER MARKER) (40' C-C)
5. THERMOPLASTIC PAVEMENT MARKING - LINE 4" (YELLOW LANE LINE - 10' DASH, 30' SKIP) WITH RAISED REFLECTIVE PAVEMENT MARKERS (1 TWO-WAY AMBER MARKER) (80' C-C)
6. THERMOPLASTIC PAVEMENT MARKING - LINE 6" (WHITE SOLID LINE)
7. THERMOPLASTIC PAVEMENT MARKING - LINE 12" (YELLOW DIAGONAL LINE)
8. THERMOPLASTIC PAVEMENT MARKING - LINE 24" (WHITE STOP LINE)
9. THERMOPLASTIC PAVEMENT MARKING - LETTERS AND SYMBOLS (TYP.)
10. RAISED REFLECTIVE PAVEMENT MARKERS (ONE-WAY AMBER MARKER) (40' C-C)
11. RAISED REFLECTIVE PAVEMENT MARKERS (ONE-WAY AMBER MARKER) (80' C-C)
12. RAISED REFLECTIVE PAVEMENT MARKERS (TWO-WAY AMBER MARKER) (40' C-C)
13. RAISED REFLECTIVE PAVEMENT MARKERS (TWO-WAY AMBER MARKER) (80' C-C)
14. RAISED REFLECTIVE PAVEMENT MARKERS (ONE-WAY CRYSTAL MARKER) (40' C-C)

HOT-MIX ASPHALT SURFACE REMOVAL - BUTT JOINT
TEMPORARY RAMP

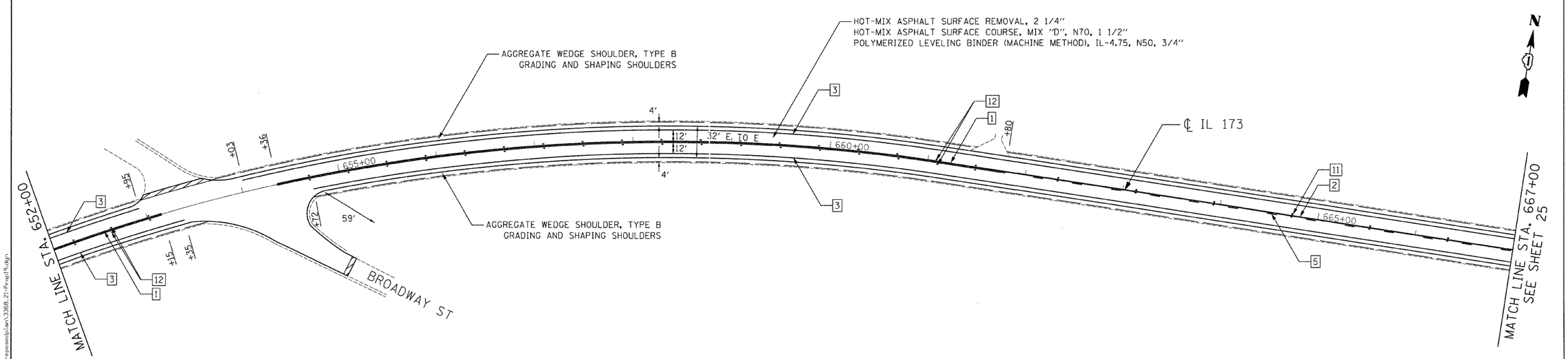

HOT-MIX ASPHALT SURFACE REMOVAL - BUTT JOINT
TEMPORARY RAMP

FILE NAME = r:\proj\3368\3368.21\design\pr-pavmkg\3368.21-Prop19.dgn

Ciorba Group, Inc. CONSULTING ENGINEERS 5507 North Cumberland Avenue, Suite 402 Chicago, Illinois 60656 Tel. 773.775.4009 Fax 773.775.4014	USER NAME = alau	DESIGNED - DD	REVISED -	STATE OF ILLINOIS DEPARTMENT OF TRANSPORTATION	IL 173 ALDEN ROAD TO US 12 PROPOSED ROADWAY AND PAVEMENT MARKING PLAN
		DRAWN - RJR	REVISED -		
	PLOT SCALE = 50.0000 ' / IN.	CHECKED - SNS	REVISED -		
	PLOT DATE = 4/21/2009	DATE - 4/22/09	REVISED -		

SCALE: 1"=50' | SHEET NO. 23 OF 36 SHEETS | STA. 638+00 TO STA. 667+00

F.A.P. RTE.	SECTION	COUNTY	TOTAL SHEETS	SHEET NO.
303	(132, 133 & 134) RS-5	MCHENRY	36	23
		CONTRACT NO. 62496		

FED. ROAD DIST. NO. 1 | ILLINOIS | FED. AID PROJECT

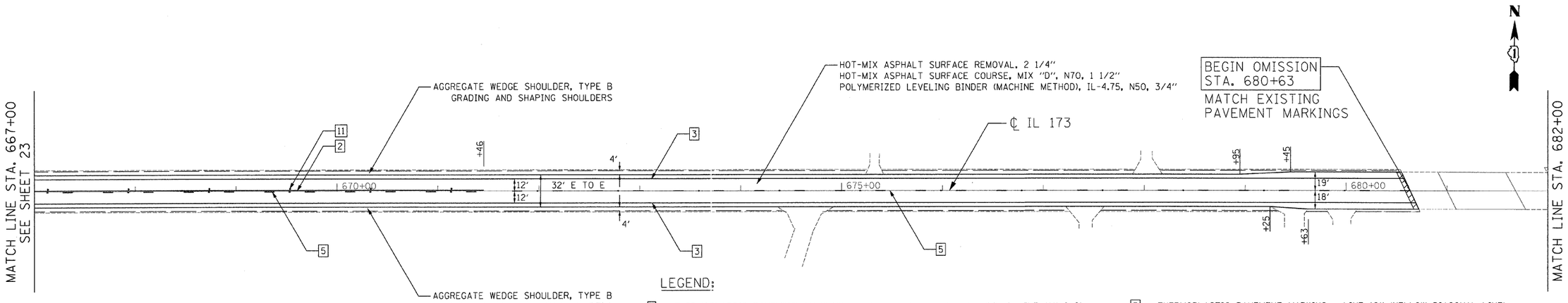

AGGREGATE WEDGE SHOULDER, TYPE B
GRADING AND SHAPING SHOULDERS

HOT-MIX ASPHALT SURFACE REMOVAL - BUTT JOINT
TEMPORARY RAMP

LEGEND:

1. THERMOPLASTIC PAVEMENT MARKING - LINE 4" (DOUBLE YELLOW SOLID LINE 11" C-C)
2. THERMOPLASTIC PAVEMENT MARKING - LINE 4" (YELLOW SOLID LINE)
3. THERMOPLASTIC PAVEMENT MARKING - LINE 4" (WHITE EDGE LINE)
4. THERMOPLASTIC PAVEMENT MARKING - LINE 4" (YELLOW LANE LINE - 10' DASH, 30' SKIP) WITH RAISED REFLECTIVE PAVEMENT MARKERS (1 TWO-WAY AMBER MARKER) (40' C-C)
5. THERMOPLASTIC PAVEMENT MARKING - LINE 4" (YELLOW LANE LINE - 10' DASH, 30' SKIP) WITH RAISED REFLECTIVE PAVEMENT MARKERS (1 TWO-WAY AMBER MARKER) (80' C-C)
6. THERMOPLASTIC PAVEMENT MARKING - LINE 6" (WHITE SOLID LINE)
7. THERMOPLASTIC PAVEMENT MARKING - LINE 12" (YELLOW DIAGONAL LINE)
8. THERMOPLASTIC PAVEMENT MARKING - LINE 24" (WHITE STOP LINE)
9. THERMOPLASTIC PAVEMENT MARKING - LETTERS AND SYMBOLS (TYP.)
10. RAISED REFLECTIVE PAVEMENT MARKERS (ONE-WAY AMBER MARKER) (40' C-C)
11. RAISED REFLECTIVE PAVEMENT MARKERS (ONE-WAY AMBER MARKER) (80' C-C)
12. RAISED REFLECTIVE PAVEMENT MARKERS (TWO-WAY AMBER MARKER) (40' C-C)
13. RAISED REFLECTIVE PAVEMENT MARKERS (TWO-WAY AMBER MARKER) (80' C-C)
14. RAISED REFLECTIVE PAVEMENT MARKERS (ONE-WAY CRYSTAL MARKER) (40' C-C)

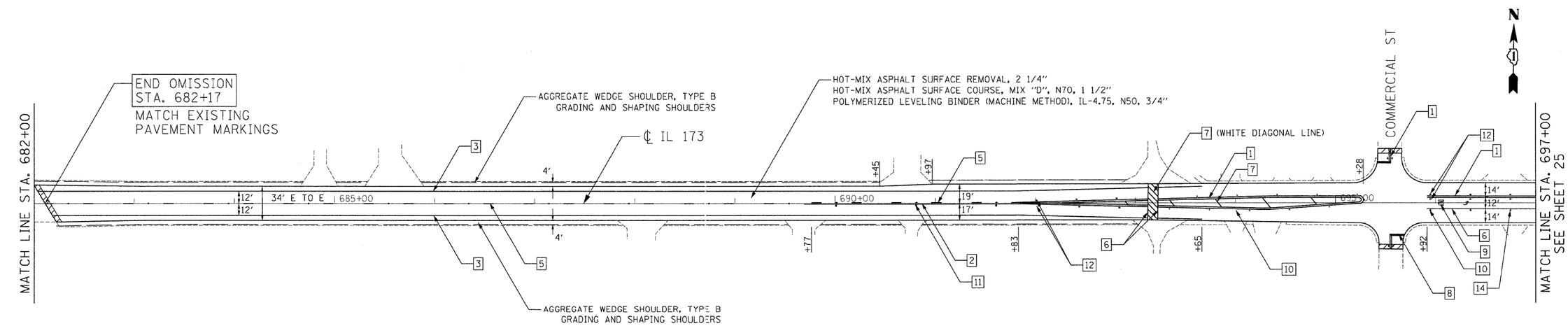

AGGREGATE WEDGE SHOULDER, TYPE B
GRADING AND SHAPING SHOULDERS

HOT-MIX ASPHALT SURFACE REMOVAL - BUTT JOINT
TEMPORARY RAMP

FILE NAME = c:\pw_proj\3368\3368.21\design\proposedplan\3368.21-Prop02.dgn

Ciorba Group, Inc.
CONSULTING ENGINEERS
5507 North Cumberland Avenue, Suite 402
Chicago, Illinois 60656
Tel. 773.775.4009 Fax 773.775.4014

USER NAME = alau	DESIGNED - DD	REVISED -	
	DRAWN - RJR	REVISED -	
PLOT SCALE = 50.0000 ' / IN.	CHECKED - SNS	REVISED -	
PLOT DATE = 4/21/2009	DATE - 4/22/09	REVISED -	

STATE OF ILLINOIS
DEPARTMENT OF TRANSPORTATION

IL 173
ALDEN ROAD TO US 12
PROPOSED ROADWAY AND PAVEMENT MARKING PLAN

SCALE: 1"=50' | SHEET NO. 24OF 36 SHEETS | STA. 667+00 TO STA. 697+00

F.A.P. RTE.	SECTION	COUNTY	TOTAL SHEETS	SHEET NO.
303	(132, 133 & 134) RS-5	MCHENRY	36	24
		CONTRACT NO. 62496		

FED. ROAD DIST. NO. 1 | ILLINOIS | FED. AID PROJECT

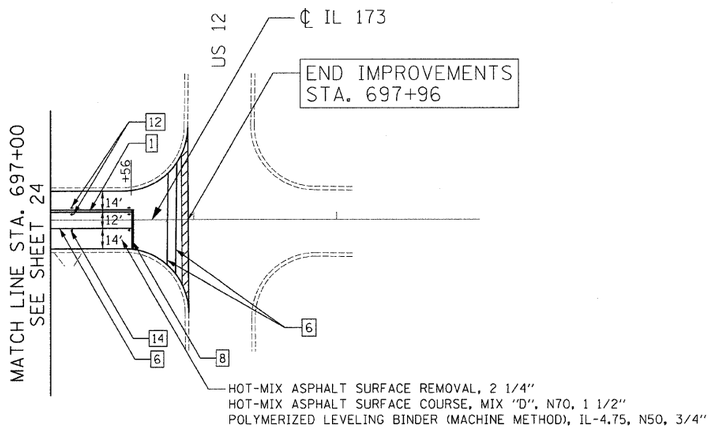

HOT-MIX ASPHALT SURFACE REMOVAL - BUTT JOINT
TEMPORARY RAMP

N

LEGEND:

1. THERMOPLASTIC PAVEMENT MARKING - LINE 4" (DOUBLE YELLOW SOLID LINE 11" C-C)
2. THERMOPLASTIC PAVEMENT MARKING - LINE 4" (YELLOW SOLID LINE)
3. THERMOPLASTIC PAVEMENT MARKING - LINE 4" (WHITE EDGE LINE)
4. THERMOPLASTIC PAVEMENT MARKING - LINE 4" (YELLOW LANE LINE - 10' DASH, 30' SKIP) WITH RAISED REFLECTIVE PAVEMENT MARKERS (1 TWO-WAY AMBER MARKER) (40' C-C)
5. THERMOPLASTIC PAVEMENT MARKING - LINE 4" (YELLOW LANE LINE - 10' DASH, 30' SKIP) WITH RAISED REFLECTIVE PAVEMENT MARKERS (1 TWO-WAY AMBER MARKER) (80' C-C)
6. THERMOPLASTIC PAVEMENT MARKING - LINE 6" (WHITE SOLID LINE)
7. THERMOPLASTIC PAVEMENT MARKING - LINE 12" (YELLOW DIAGONAL LINE)
8. THERMOPLASTIC PAVEMENT MARKING - LINE 24" (WHITE STOP LINE)
9. THERMOPLASTIC PAVEMENT MARKING - LETTERS AND SYMBOLS (TYP.)
10. RAISED REFLECTIVE PAVEMENT MARKERS (ONE-WAY AMBER MARKER) (40' C-C)
11. RAISED REFLECTIVE PAVEMENT MARKERS (ONE-WAY AMBER MARKER) (80' C-C)
12. RAISED REFLECTIVE PAVEMENT MARKERS (TWO-WAY AMBER MARKER) (40' C-C)
13. RAISED REFLECTIVE PAVEMENT MARKERS (TWO-WAY AMBER MARKER) (80' C-C)
14. RAISED REFLECTIVE PAVEMENT MARKERS (ONE-WAY CRYSTAL MARKER) (40' C-C)

Ciorba Group, Inc.
CONSULTING ENGINEERS
5507 North Cumberland Avenue, Suite 402
Chicago, Illinois 60656
Tel. 773.775.4009 Fax 773.775.4014

USER NAME = mready	DESIGNED - DD	REVISED -	
	DRAWN - RJR	REVISED -	
PLOT SCALE = 50.0000 ' / IN.	CHECKED - SNS	REVISED -	
PLOT DATE = 4/21/2009	DATE - 4/22/09	REVISED -	

STATE OF ILLINOIS
DEPARTMENT OF TRANSPORTATION

IL 173
ALDEN ROAD TO US 12
PROPOSED ROADWAY AND PAVEMENT MARKING PLAN

SCALE: 1"=50' | SHEET NO. 25OF 36 SHEETS | STA. 697+00 TO STA. 700+00

F.A.P. RTE.	SECTION	COUNTY	TOTAL SHEETS	SHEET NO.
303	(132, 133 & 134) RS-5	MCHENRY	36	25
		CONTRACT NO. 62496		

FED. ROAD DIST. NO. 1 | ILLINOIS | FED. AID PROJECT

FILE NAME = N:\PROJ\3368\3368.21\Design\ProposedPlan\3368.21-Prop21.dgn

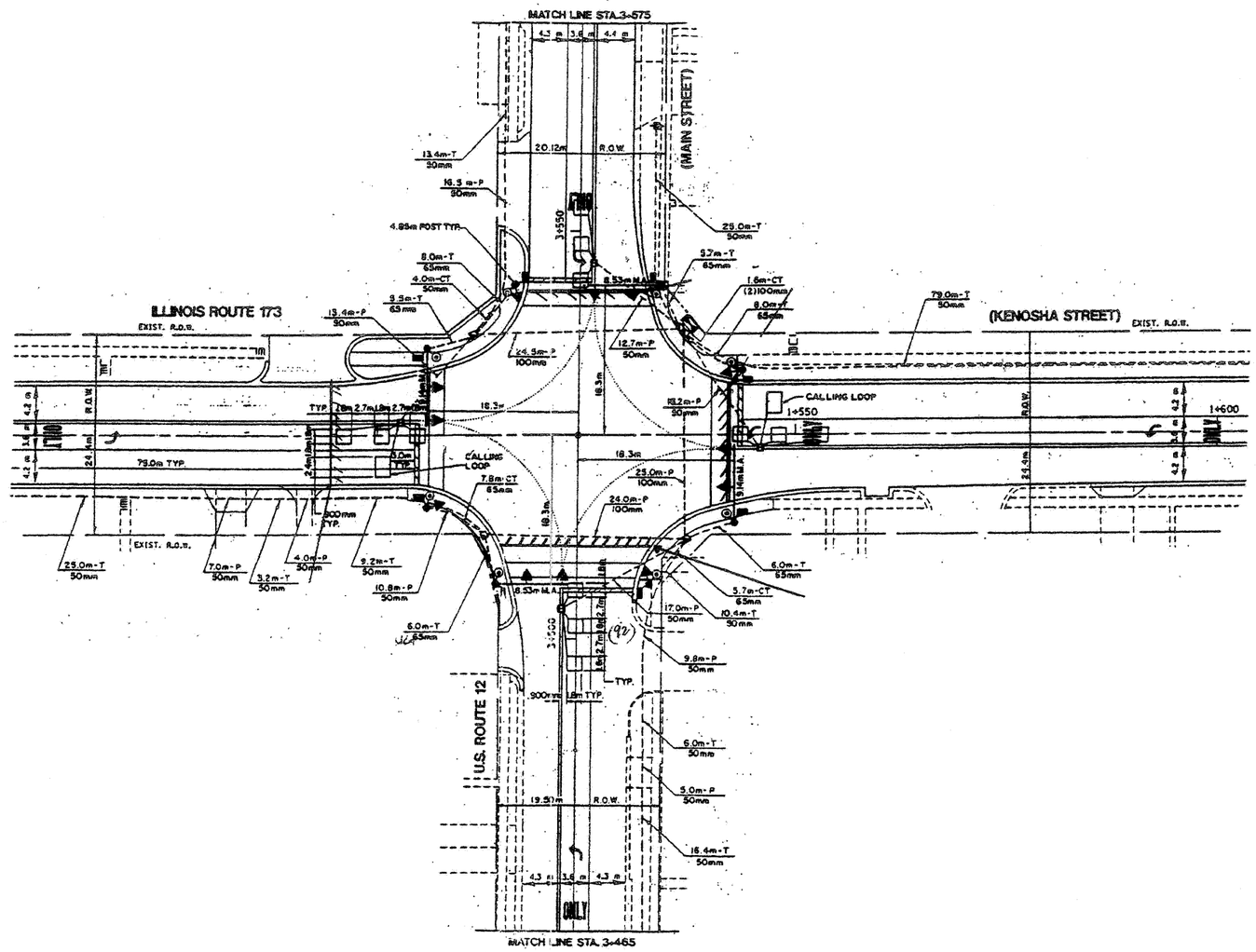

REPLACE ALL DETECTOR LOOPS AS SHOWN
(WITHIN PROJECT LIMITS)

CODE NO.	QUANTITY	UNIT	ITEM
86600600	150	FOOT	DETECTOR LOOP REPLACEMENT

FILE NAME = w:\proj\3368\3368.21\design\Signals\3368.21L.dgn

Ciorba Group, Inc.
CONSULTING ENGINEERS
5507 North Cumberland Avenue, Suite 402
Chicago, Illinois 60656
Tel. 773.775.4009 Fax 773.775.4014

USER NAME = olau	DESIGNED - EPS	REVISED -	
	DRAWN - EPS	REVISED -	
PLOT SCALE = 1.0000 ' / IN.	CHECKED - WBL	REVISED -	
PLOT DATE = 4/21/2009	DATE - 4/22/09	REVISED -	

STATE OF ILLINOIS
DEPARTMENT OF TRANSPORTATION

IL 173
ALDEN ROAD TO US 12
DETECTOR LOOP REPLACEMENT PLAN

SCALE: N.T.S. | SHEET NO. 26 OF 36 SHEETS | STA. | TO STA.

F.A.P. RTE.	SECTION	COUNTY	TOTAL SHEETS	SHEET NO.
303	(132, 133 & 134) RS-5	MCHENRY	36	26
		CONTRACT NO. 62496		
FED. ROAD DIST. NO. 1	ILLINOIS	FED. AID PROJECT		

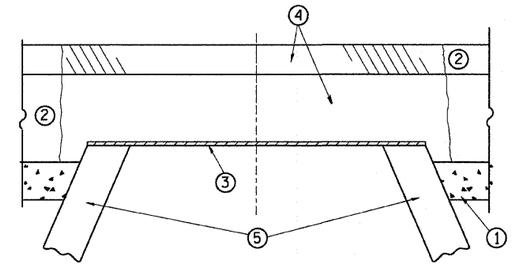

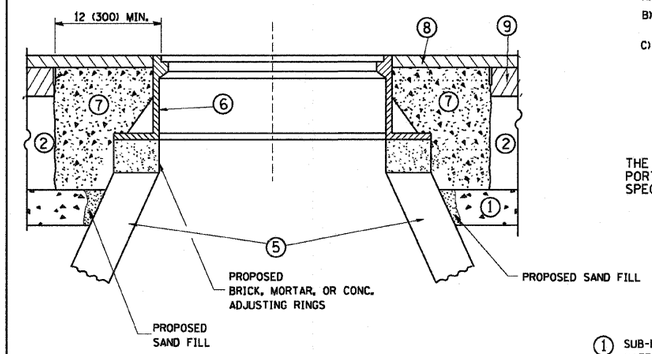

CONSTRUCTION PROCEDURES

STAGE 1 (BEFORE PAVEMENT MILLING)

A) REMOVE A MINIMUM OF 12 (300) OF THE PAVEMENT FROM AROUND THE STRUCTURE.

B) REMOVE THE EXISTING FRAME AND LID FROM THE STRUCTURE.

C) COVER THE STRUCTURE OPENING WITH A 36 (900) DIAMETER METAL PLATE.

D) BACKFILL WITH CRUSHED STONE AND A MINIMUM 1½ (40) THICK HMA SURFACE MIX APPROVED BY THE ENGINEER.

STAGE 2 (AFTER PAVEMENT MILLING)

A) REMOVE THE HMA SURFACE MIX AND CRUSHED STONE.

B) INSTALL THE FRAME AND LID; ADJUST THE FRAME TO ITS FINAL SURFACE ELEVATION.

C) THE SURROUNDING SPACE SHALL BE FILLED WITH CLASS SI CONCRETE, OR HMA SURFACE COURSE OR HMA BINDER COURSE TO THE ELEVATION OF THE SURFACE OF THE EXISTING BASE COURSE OR THE BINDER COURSE.

THE PROCEDURE EXPLAINED ABOVE SHALL CONFORM TO THE APPLICABLE PORTIONS OF SECTIONS 353, 406, 602, AND 603 OF THE STANDARD SPECIFICATIONS.

LEGEND

1. SUB-BASE GRANULAR MATERIAL
2. EXISTING PAVEMENT
3. 36 (900) DIAMETER METAL PLATE
4. PROPOSED CRUSHED STONE AND HMA SURFACE MIX
5. EXISTING STRUCTURE
6. FRAME AND LID (SEE NOTES)
7. CLASS SI CONCRETE, HMA SURFACE COURSE OR HMA BINDER COURSE
8. PROPOSED HMA SURFACE COURSE
9. PROPOSED HMA BINDER COURSE

NOTES:

EXISTING BROKEN FRAMES AND LIDS SHALL BE REMOVED AND DISPOSED OF BY THE CONTRACTOR AND SHALL BE REPLACED AS DIRECTED BY THE ENGINEER. REPLACEMENT FRAMES AND LIDS WILL BE PAID FOR IN ACCORDANCE WITH ARTICLE 109.04 OF THE STANDARD SPECIFICATIONS UNLESS A SEPARATE PAY ITEM HAS BEEN PROVIDED.

IF THE EXISTING LIDS ARE OPEN, THE FRAME WILL BE ADJUSTED TO THE ELEVATION OF THE MILLED PAVEMENT SURFACE PRIOR TO THE MILLING OPERATION. THE FRAME WILL NOT BE REMOVED AND COVERED BY THE METAL PLATE.

CITY OF CHICAGO CASTINGS ARE THE PROPERTY OF THE CITY AND THE CONTRACTOR SHALL NOTIFY THE CITY FOR REMOVAL AND DISPOSITION OF THE CASTINGS.

THE METAL PLATE USED TO COVER THE STRUCTURE SHALL REMAIN THE PROPERTY OF THE CONTRACTOR.

WHEN STRUCTURES ARE TO BE ADJUSTED OR RECONSTRUCTED, THE LOWERING AND RAISING OF THE FRAMES AND LIDS WILL NOT BE PAID FOR SEPARATELY BUT WILL BE INCLUDED IN THE COST OF THE CORRESPONDING PAY ITEM.

LOCATION OF STRUCTURES:

THE CONTRACTOR WILL BE REQUIRED TO KEEP A RECORD OF THE LOCATIONS OF THE BURIED STRUCTURES ACCORDING TO THE STATION AND DISTANCE LEFT OR RIGHT OF THE CENTERLINE OF PAVEMENT. UPON COMPLETION OF THE WORK, THE CONTRACTOR WILL DELIVER THE RECORD TO THE ENGINEER.

BASIS OF PAYMENT: THIS WORK WILL BE PAID FOR AT THE CONTRACT UNIT PRICE PER EACH FOR "FRAMES AND LIDS TO BE ADJUSTED, SPECIAL"

NEW FRAMES AND LIDS, WHEN SPECIFIED, WILL BE PAID FOR SEPARATELY.

DETAILS FOR FRAMES AND LIDS ADJUSTMENT WITH MILLING

ALL DIMENSIONS ARE IN INCHES (MILLIMETERS) UNLESS OTHERWISE SHOWN

FILE NAME = W:\diststd\22x34\bd08.dgn	USER NAME = gaglionobt	DESIGNED - R. SHAH	REVISED - R. SHAH 03-10-95	STATE OF ILLINOIS DEPARTMENT OF TRANSPORTATION	DETAILS FOR FRAMES AND LIDS ADJUSTMENT WITH MILLING	F.A.P. RTE.	SECTION	COUNTY	TOTAL SHEETS	SHEET NO.
		DRAWN -	REVISED - A. ABBAS 03-21-97			303	(132, 133 & 134) RS-5	MCHENRY	36	27
	PLOT SCALE = 50.0000 ' / IN.	CHECKED -	REVISED - R. WIEDEMAN 05-14-04			BD600-03 (BD-8)		CONTRACT NO. 62496		
	PLOT DATE = 1/4/2008	DATE - 10-25-94	REVISED - R. BORO 01-01-07		SCALE: NONE / SHEET NO. 1 OF 1 SHEETS / STA. TO STA.	FED. ROAD DIST. NO. 1	ILLINOIS	FED. AID PROJECT		

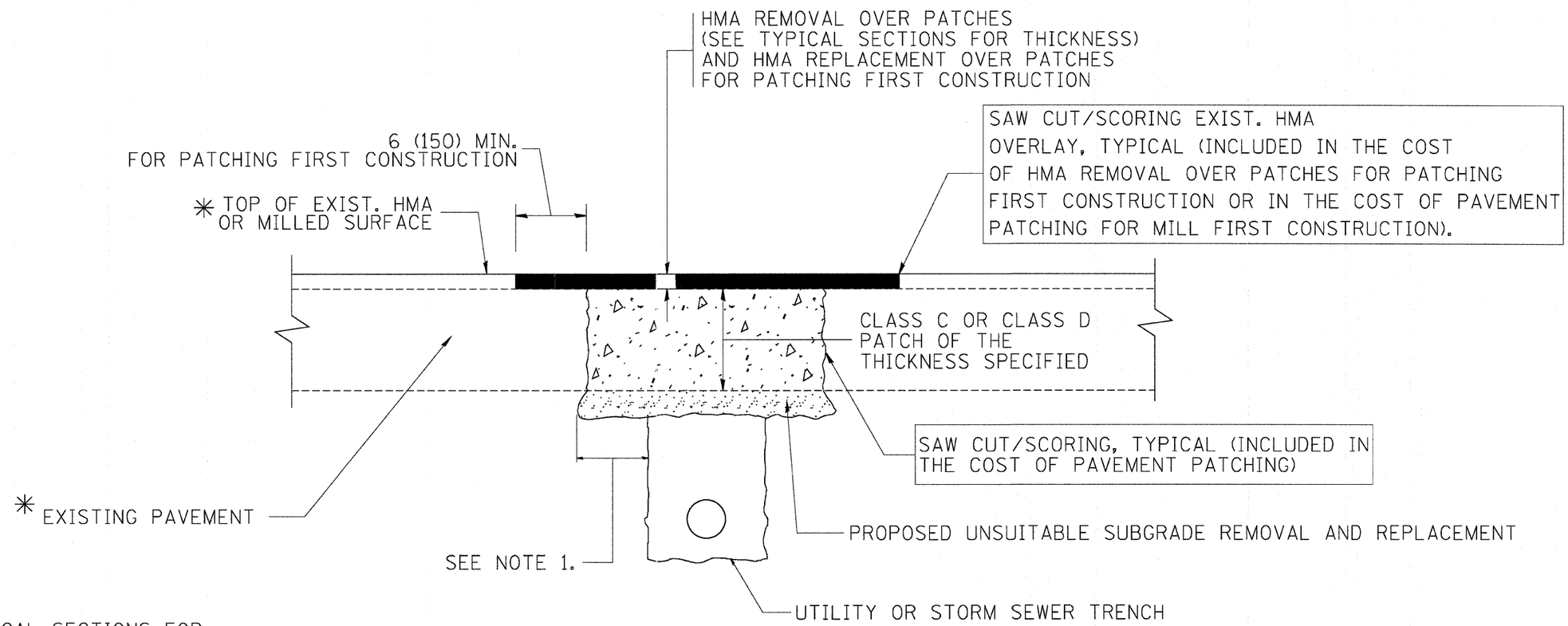

✳ SEE TYPICAL SECTIONS FOR THICKNESS AND MATERIALS

NOTES:

1. THE WIDTH OF THE FULL DEPTH PATCH OVER A TRENCH SHALL BE 12 (300) WIDER ON EACH SIDE OF THE TRENCH.
2. FOR METHOD OF MEASUREMENT AND BASIS OF PAYMENT, SEE RECURRING SPECIAL PROVISION "PATCHING WITH HOT-MIX ASPHALT OVERLAY REMOVAL".

SEQUENCE OF CONSTRUCTION (PATCHING FIRST)

1. REMOVE THE EXISTING HMA MATERIAL OVER THE AREA TO BE PATCHED.
2. REMOVE AND REPLACE WITH CLASS C OR D PATCH.
3. REPLACE HMA MATERIAL OVER THE AREA TO BE PATCHED.

SEQUENCE OF CONSTRUCTION (MILLING FIRST)

1. MILL HMA FIRST IF THERE IS AT LEAST 4½ INCHES OR MORE OF HMA MATERIAL ON TOP OF THE EXISTING PAVEMENT OR IF THE PAVEMENT IS FULL DEPTH HMA. A MINIMUM OF 2 INCHES OF HMA MATERIAL SHALL BE IN PLACE AFTER MILLING.
2. REMOVE AND REPLACE WITH FULL DEPTH CLASS D PATCHES TO TOP OF MILLED SURFACE.

ALL DIMENSIONS ARE IN INCHES (MILLIMETERS) UNLESS OTHERWISE SHOWN.

FILE NAME = c:\projects\diststd22x34\bd22.dgn	USER NAME = bauerdl	DESIGNED - R. SHAH	REVISED - A. ABBAS 04-27-98	STATE OF ILLINOIS DEPARTMENT OF TRANSPORTATION	PAVEMENT PATCHING FOR HMA SURFACED PAVEMENT			F.A.P. RTE.	SECTION	COUNTY	TOTAL SHEETS / SHEET NO.
		DRAWN -	REVISED - R. BORO 01-01-07					303	(132, 133 & 134) RS-5	MCHENRY	36 / 28
	PLOT SCALE = 50.000 ' / IN.	CHECKED -	REVISED - R. BORO 09-04-07					BD400-04 (BD-22)		CONTRACT NO. 62496	
	PLOT DATE = 10/27/2008	DATE - 10-25-94	REVISED - K. ENG 10-27-08		SCALE: NONE	SHEET NO. 1 OF 1 SHEETS	STA. TO STA.	FED. ROAD DIST. NO. 1	ILLINOIS	FED. AID PROJECT	

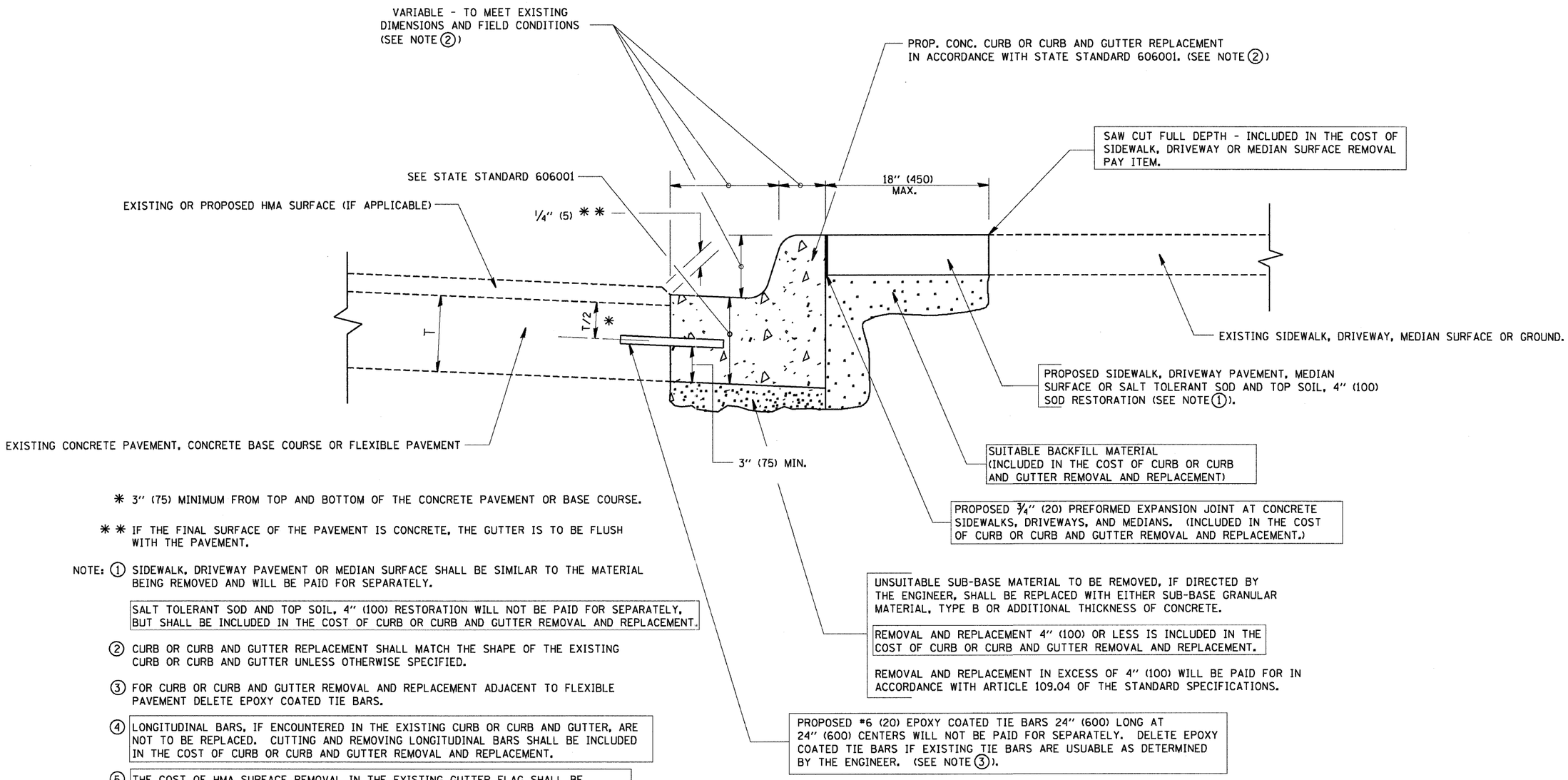

* 3" (75) MINIMUM FROM TOP AND BOTTOM OF THE CONCRETE PAVEMENT OR BASE COURSE.

* * IF THE FINAL SURFACE OF THE PAVEMENT IS CONCRETE, THE GUTTER IS TO BE FLUSH WITH THE PAVEMENT.

NOTE: (1) SIDEWALK, DRIVEWAY PAVEMENT OR MEDIAN SURFACE SHALL BE SIMILAR TO THE MATERIAL BEING REMOVED AND WILL BE PAID FOR SEPARATELY.

SALT TOLERANT SOD AND TOP SOIL, 4" (100) RESTORATION WILL NOT BE PAID FOR SEPARATELY, BUT SHALL BE INCLUDED IN THE COST OF CURB OR CURB AND GUTTER REMOVAL AND REPLACEMENT.

(2) CURB OR CURB AND GUTTER REPLACEMENT SHALL MATCH THE SHAPE OF THE EXISTING CURB OR CURB AND GUTTER UNLESS OTHERWISE SPECIFIED.

(3) FOR CURB OR CURB AND GUTTER REMOVAL AND REPLACEMENT ADJACENT TO FLEXIBLE PAVEMENT DELETE EPOXY COATED TIE BARS.

(4) LONGITUDINAL BARS, IF ENCOUNTERED IN THE EXISTING CURB OR CURB AND GUTTER, ARE NOT TO BE REPLACED. CUTTING AND REMOVING LONGITUDINAL BARS SHALL BE INCLUDED IN THE COST OF CURB OR CURB AND GUTTER REMOVAL AND REPLACEMENT.

(5) THE COST OF HMA SURFACE REMOVAL IN THE EXISTING GUTTER FLAG SHALL BE INCLUDED IN THE COST OF THE CURB AND GUTTER REMOVAL AND REPLACEMENT.

(6) THE REMOVAL AND REPLACEMENT OF THE EXISTING CURB OR CURB AND GUTTER SHALL BE DONE IN ACCORDANCE WITH THE APPLICABLE PORTIONS OF SECTION 440 AND 606 OF THE STANDARD SPECIFICATIONS.

(7) THE LOCATIONS OF REMOVAL AND REPLACEMENT OF EXISTING CURB OR CURB AND GUTTER SHALL BE DETERMINED BY THE RESIDENT ENGINEER AT THE TIME OF CONSTRUCTION.

BASIS OF PAYMENT:

THIS WORK WILL BE PAID FOR AT THE CONTRACT UNIT PRICE PER FOOT (METER) FOR "CURB REMOVAL AND REPLACEMENT" OR "COMBINATION CONCRETE CURB AND GUTTER REMOVAL AND REPLACEMENT".

CURB OR CURB AND GUTTER REMOVAL AND REPLACEMENT

ALL DIMENSIONS ARE IN INCHES (MILLIMETERS) UNLESS OTHERWISE SHOWN.

FILE NAME = W:\diststd\22x34\bd24.dgn	USER NAME = gaglionobt	DESIGNED - A. HOUSEH	REVISED - R. SHAH 10-03-96	STATE OF ILLINOIS DEPARTMENT OF TRANSPORTATION	CURB OR CURB AND GUTTER REMOVAL AND REPLACEMENT			F.A.P. RTE.	SECTION	COUNTY	TOTAL SHEETS / SHEET NO.
		DRAWN -	REVISED - A. ABBAS 03-21-97					303	(132, 133 & 134) RS-5	MCHENRY	36 / 29
	PLOT SCALE = 50.000 ' / IN.	CHECKED -	REVISED - M. GOMEZ 01-22-01					BD600-06 (BD-24)		CONTRACT NO. 62496	
	PLOT DATE = 1/4/2008	DATE - 03-11-94	REVISED - R. BORO 01-01-07		SCALE: NONE	SHEET NO. 1 OF 1 SHEETS	STA. TO STA.	FED. ROAD DIST. NO. 1	ILLINOIS	FED. AID PROJECT	

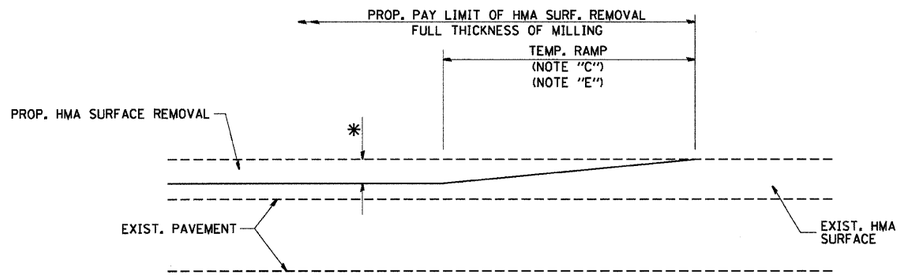

MILLED TEMPORARY RAMP

(FOR BUTT JOINT AND HMA TAPER SEE DETAIL BELOW)

OPTION 1

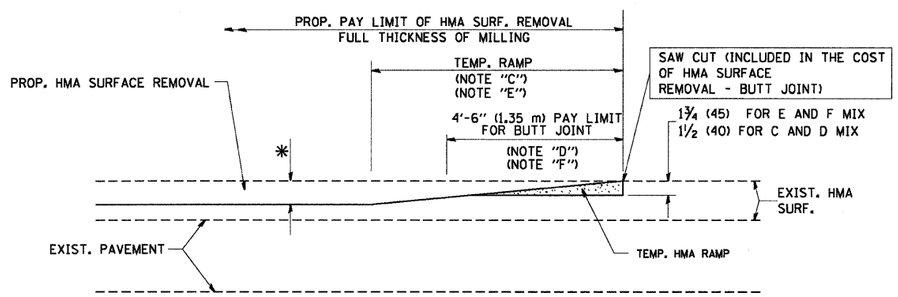

HMA CONSTRUCTED TEMPORARY RAMP

(FOR BUTT JOINT AND HMA TAPER SEE DETAIL BELOW)

OPTION 2

TYPICAL TEMPORARY RAMP

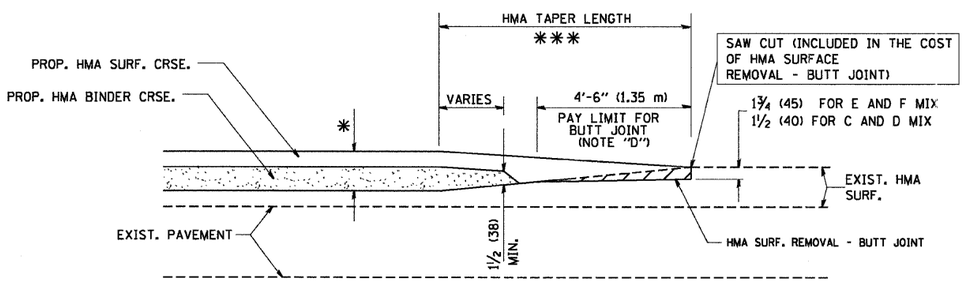

BUTT JOINT AND HMA TAPER

TYPICAL BUTT JOINT AND HMA TAPER FOR MILLING AND RESURFACING

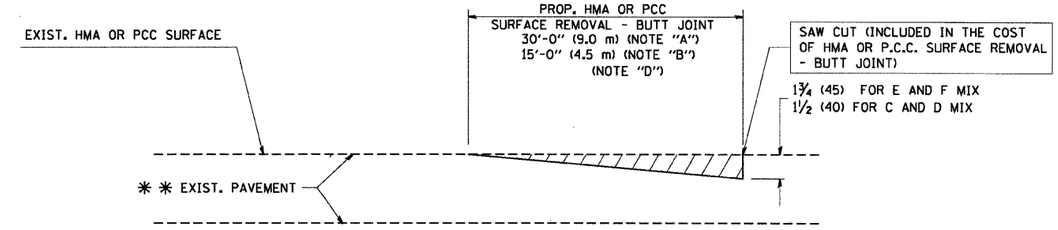

BUTT JOINT DETAIL

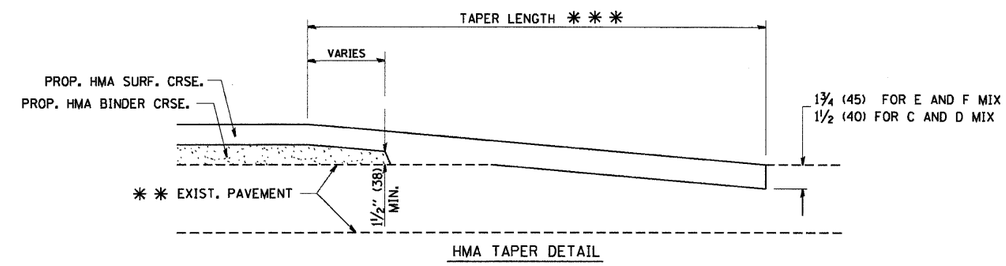

HMA TAPER DETAIL

TYPICAL BUTT JOINT AND HMA TAPER FOR RESURFACING ONLY

** PC CONCRETE, HMA OR HMA RESURFACED PAVEMENT.

NOTES

A: MAINLINE ROADWAYS AND MAJOR SIDE ROADS.

B: MINOR SIDE ROADS.

C: THE TEMP. RAMP SHALL BE CONSTRUCTED IMMEDIATELY UPON REMOVAL OF THE EXISTING HMA SURFACE.

D: THE BUTT JOINT SHALL BE CONSTRUCTED IMMEDIATELY PRIOR TO PLACING THE PROPOSED HMA COURSES.

E: TAPER THE TEMP. RAMP AT A RATE OF 3'-0" (900 mm) PER 1 INCH (25 mm) OF MILLING THICKNESS.

F: INSTALLATION AND REMOVAL OF THE 4'-6" (1.35 m) TEMP. RAMP IS INCLUDED IN COST OF HMA SURFACE REMOVAL - BUTT JOINT

G: SEE ARTICLE 406.08 AND 406.14 OF THE STANDARD SPECIFICATIONS FOR "HMA AND/OR PCC SURFACE REMOVAL, BUTT JOINT".

* SEE TYPICAL SECTIONS FOR MILLING THICKNESS.

*** 20'-0" (6.1 m) PER 1 (25) RESURFACING (NOTE "A")
10'-0" (3.0 m) PER 1 (25) RESURFACING (NOTE "B")

BASIS OF PAYMENT:

THE BUTT JOINT WILL BE PAID FOR AT THE CONTRACT UNIT PRICE PER SQUARE YARD (SQUARE METER) FOR "HOT-MIX ASPHALT SURFACE REMOVAL - BUTT JOINT" OR FOR "PORTLAND CEMENT CONCRETE SURFACE REMOVAL- BUTT JOINT".

ALL DIMENSIONS ARE IN INCHES (MILLIMETERS) UNLESS OTHERWISE SHOWN.

FILE NAME = W:\diststd\22x34\bd32.dgn	USER NAME = gaglionobt	DESIGNED - M. DE YONG	REVISED - R. SHAH 10-25-94	STATE OF ILLINOIS DEPARTMENT OF TRANSPORTATION	BUTT JOINT AND HMA TAPER DETAILS	F.A.P. RTE.	SECTION	COUNTY	TOTAL SHEETS	SHEET NO.
		DRAWN -	REVISED - A. ABBAS 03-21-97			303	(132, 133 & 134) RS-5	MCHENRY	36	30
	PLOT SCALE = 50.0000 ' / IN.	CHECKED -	REVISED - M. GOMEZ 04-06-01			BD400-05 BD32		CONTRACT NO. 62496		
	PLOT DATE = 1/4/2008	DATE - 06-13-90	REVISED - R. BORO 01-01-07		SCALE: NONE SHEET NO. 1 OF 1 SHEETS STA. TO STA.	FED. ROAD DIST. NO. 1	ILLINOIS	FED. AID PROJECT		

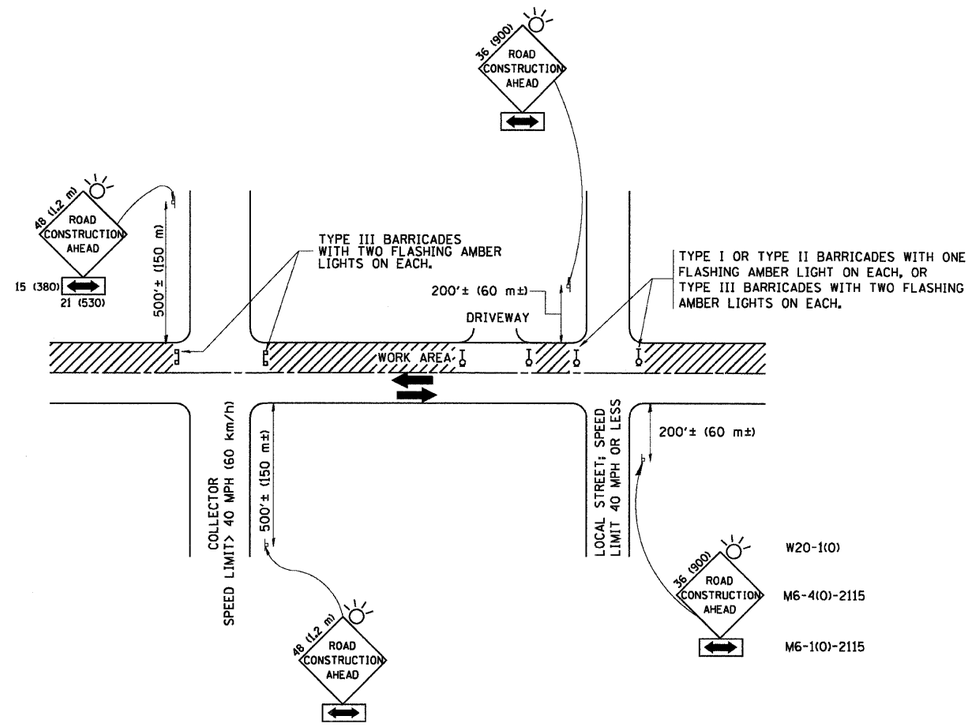

TRAFFIC CONTROL AND PROTECTION FOR SIDE ROADS, INTERSECTIONS, AND DRIVEWAYS

NOTES:

A. FOR NO LANE RESTRICTION ON THE SIDE ROAD OR DRIVEWAYS

1. SIDE ROAD WITH A SPEED LIMIT OF 40 MPH (60 km/h) OR LESS AS SHOWN ON THE DRAWING AND AS DIRECTED BY THE ENGINEER:

   a) ONE **ROAD CONSTRUCTION AHEAD** SIGN 36 x 36 (900x900) WITH A FLASHER AND FLAG MOUNTED ON IT APPROXIMATELY 200' (60 m) IN ADVANCE OF THE MAIN ROUTE.

   b) THE CLOSED PORTION OF THE MAIN ROUTE SHALL BE PROTECTED BY BLOCKING WITH TYPE I, TYPE II OR TYPE III BARRICADES, 1/3 OF THE CROSS SECTION OF THE CLOSED PORTION.

2. SIDE ROAD WITH A SPEED LIMIT GREATER THAN 40 MPH (60 km/h) AS SHOWN ON THE DRAWING AND AS DIRECTED BY THE ENGINEER:

   a) ONE **ROAD CONSTRUCTION AHEAD** SIGN 48 x 48 (1.2 m x 1.2 m) WITH A FLASHER MOUNTED ON IT APPROXIMATELY 500' (150 m) IN ADVANCE OF THE MAIN ROUTE.

   b) THE CLOSED PORTION OF THE MAIN ROUTE SHALL BE PROTECTED BY BLOCKING WITH TYPE III BARRICADES, 1/2 OF THE CROSS SECTION OF THE CLOSED PORTION.

3. WHEN THE SIDE ROAD LIES BETWEEN THE BEGINNING OF THE MAINLINE SIGNING AND THE WORK ZONE, A SINGLE HEADED ARROW (M6-1) SHALL BE USED IN LIEU OF THE DOUBLE HEADED ARROW (M6-4).

B. FOR A LANE CLOSURE ON A SIDE ROAD OR DRIVEWAY:

USE APPLICABLE PORTIONS OF THE TYPICAL APPLICATION OF TRAFFIC CONTROL DEVICES (STD. 701501, STD. 701606 OR THE APPROPRIATE STANDARD). THE SPACING OF SIGNS AND BARRICADES SHALL BE ADJUSTED FOR FIELD CONDITIONS AS DIRECTED BY THE ENGINEER. THE DIRECTIONAL ARROW SHALL BE COVERED OR REMOVED WHEN NO LONGER CONSISTENT WITH THE SIDE ROAD LANE CLOSURE.

C. ADVANCE WARNING SIGNS ARE TO BE OMITTED ON DRIVEWAY UNLESS OTHERWISE NOTED.

D. THE TRAFFIC CONTROL AND PROTECTION FOR SIDE ROADS, INTERSECTIONS, AND DRIVEWAYS SHALL BE INCIDENTAL TO THE COST OF SPECIFIED TRAFFIC CONTROL STANDARDS OR ITEMS.

All dimensions are in millimeters (inches) unless otherwise shown.

FILE NAME = W:\diststd\22x34\tc10.dgn	USER NAME = gaglianobt	DESIGNED - LHA	REVISED - J. OBERLE 10-18-95	STATE OF ILLINOIS DEPARTMENT OF TRANSPORTATION	TRAFFIC CONTROL AND PROTECTION FOR SIDE ROADS, INTERSECTIONS, AND DRIVEWAYS	F.A.P. RTE.	SECTION	COUNTY	TOTAL SHEETS	SHEET NO.
		DRAWN -	REVISED - A. HOUSEH 03-06-96			303	(132, 133 & 134) RS-5	MCHENRY	36	31
	PLOT SCALE = 50.000 ' / IN.	CHECKED -	REVISED - A. HOUSEH 10-15-96			TC-10		CONTRACT NO. 62496		
	PLOT DATE = 1/4/2000	DATE - 06-89	REVISED -T. RAMMACHER 01-06-00		SCALE: NONE / SHEET NO. 1 OF 1 SHEETS / STA. TO STA.	FED. ROAD DIST. NO. 1	ILLINOIS	FED. AID PROJECT		

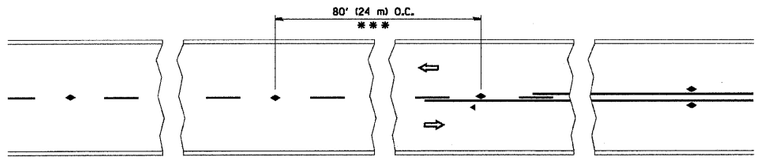

* * * REDUCE TO 40' (12 m) O.C. ON CURVES WITH POSTED OR ADVISORY SPEED 45 M.P.H. (70 km/h) OR LESS.

TWO-LANE/TWO-WAY

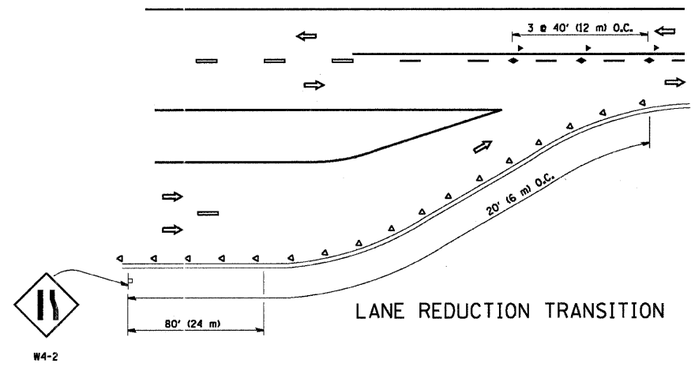

LANE REDUCTION TRANSITION

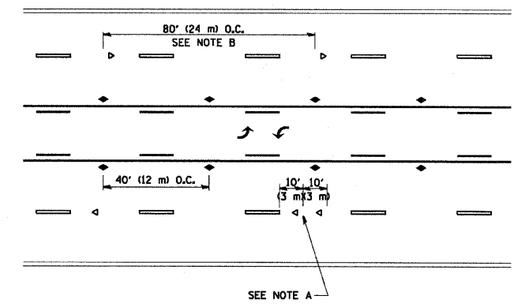

TWO-WAY LEFT TURN

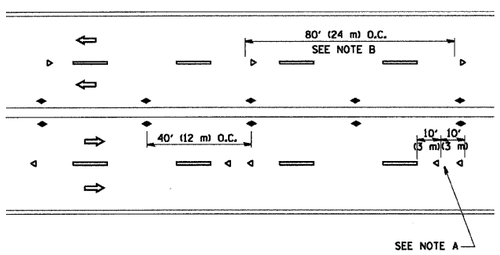

MULTI-LANE/UNDIVIDED

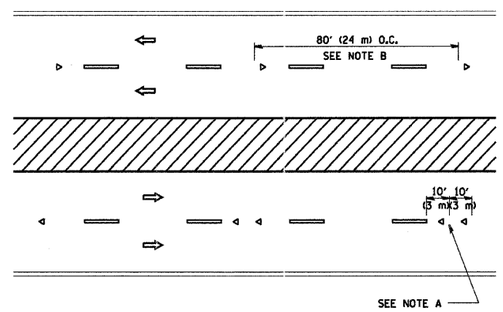

MULTI-LANE/DIVIDED

GENERAL NOTES

1. MARKERS USED WITH DASHED LINES SHALL BE CENTERED IN THE GAP BETWEEN SEGMENTS.
2. MARKERS USED ADJACENT TO SOLID LINES SHALL BE OFFSET 2 TO 3 (50 TO 75) TOWARD TRAFFIC AS SHOWN.
3. MARKERS THROUGH TANGENTS LESS THAN 500' (150 m) IN LENGTH BETWEEN CURVES SHALL BE INSTALLED AT THE LESSER OF THE TWO CURVE SPACINGS.

SYMBOLS

- YELLOW STRIPE
- WHITE STRIPE
- ONE-WAY AMBER MARKER
- ONE-WAY CRYSTAL MARKER (W/O)
- TWO-WAY AMBER MARKER

LANE MARKER NOTES

B. REDUCE TO 40' (12 m) O.C. ON CURVES WHERE ADVISORY SPEEDS ARE 10 M.P.H (20 km/h) LOWER THAN POSTED SPEEDS.

A. USE DOUBLE LANE LINE MARKERS SPACED AS SHOWN.

DESIGN NOTES

1. DOUBLE LANE LINE MARKERS SHALL BE USED UNLESS SPECIFIED OTHERWISE.
2. EXCEPT AS SHOWN ON THE LANE REDUCTION TRANSITION AND FREEWAY EXIT RAMP DETAIL, MARKERS ARE NOT TO BE SPECIFIED ON RIGHT EDGE LINES.
3. THE EXACT MARKER LIMITS, SPACING, AND COLOR SHOULD BE INCLUDED IN THE PLANS.
4. MARKERS SHOULD NOT BE USED ALONGSIDE CURBS EXCEPT FOR EXTREMELY SHORT SECTIONS OF CURBS WHERE NOT MORE THAN TWO MARKERS WOULD BE INVOLVED.

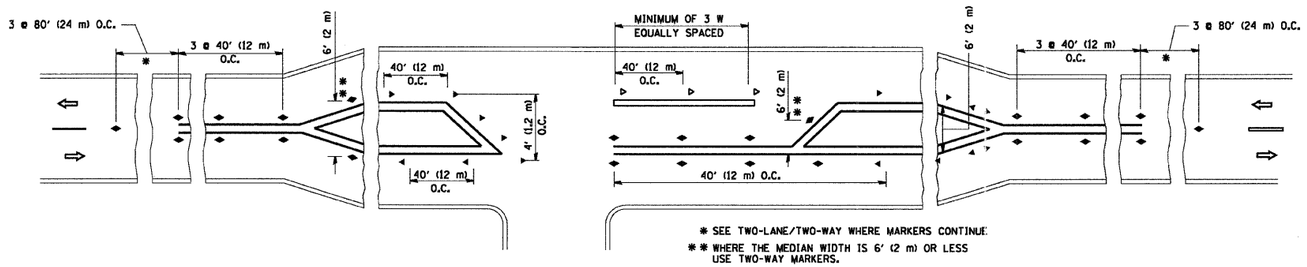

* SEE TWO-LANE/TWO-WAY WHERE MARKERS CONTINUE.

* * WHERE THE MEDIAN WIDTH IS 6' (2 m) OR LESS USE TWO-WAY MARKERS.

LEFT TURN

All dimensions are in inches (millimeters) unless otherwise shown.

FILE NAME = W:\diststd\22x34\tc11.dgn	USER NAME = geglienobt	DESIGNED -	REVISED - T. RAMMACHER 09-19-94	STATE OF ILLINOIS DEPARTMENT OF TRANSPORTATION	TYPICAL APPLICATIONS RAISED REFLECTIVE PAVEMENT MARKERS (SNOW-PLOW RESISTANT)	F.A.P. RTE.	SECTION	COUNTY	TOTAL SHEETS	SHEET NO.
		DRAWN -	REVISED - T. RAMMACHER 03-12-99			303	(132, 133 & 134) RS-5	MCHENRY	36	32
	PLOT SCALE = 50.000 ' / IN.	CHECKED -	REVISED - T. RAMMACHER 01-06-00			TC-11		CONTRACT NO. 62496		
	PLOT DATE = 1/4/2008	DATE -	REVISED -		SCALE: NONE / SHEET NO. 1 OF 1 SHEETS / STA. / TO STA.	FED. ROAD DIST. NO. 1	ILLINOIS	FED. AID PROJECT		

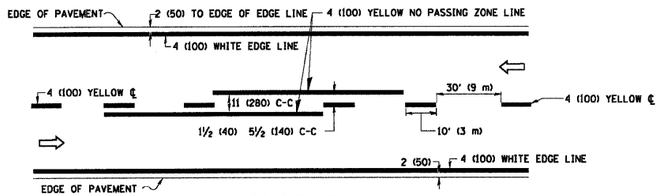

2-LANE ROADWAY

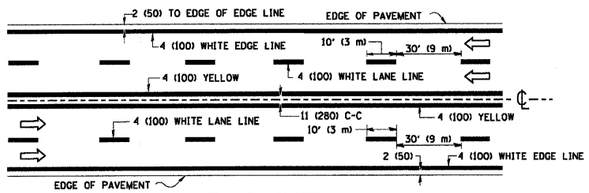

MULTI-LANE UNDIVIDED

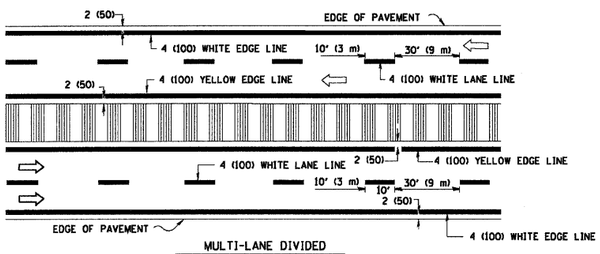

MULTI-LANE DIVIDED
WITH MOUNTABLE MEDIAN

NOTE: MEDIANS WITH BARRIER CURB DO NOT REQUIRE AN EDGE LINE

TYPICAL LANE AND EDGE LINE MARKING

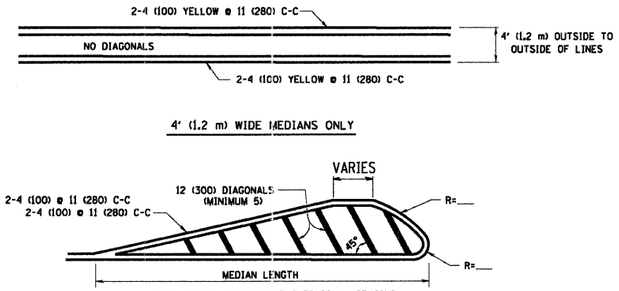

4' (1.2 m) WIDE MEDIANS ONLY

FOR MEDIAN LENGTHS WHERE DIAGONAL SPACING CANNOT BE ATTAINED, USE 5 (FIVE) EQUALLY SPACED DIAGONAL LINES.

DIAGONAL LINE SPACING: 50' (15 m) C-C (LESS THAN 30MPH (50 km/h))
75' (25 m) C-C 30MPH (50 km/h) TO 45MPH (70 km/h))
150' (45 m) C-C (MORE THAN 45MPH (70 km/h))

MEDIANS OVER 4' (1.2 m) WIDE

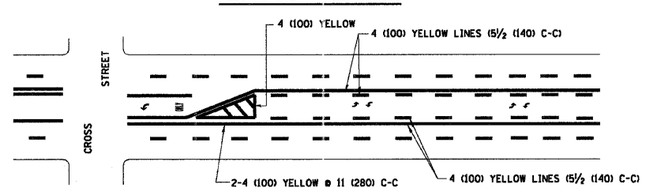

A MINIMUM OF TWO PAIRS OF TURN ARROWS SHALL BE USED, WHITE IN COLOR. ADDITIONAL PAIRS SHALL BE PLACED AT 200' (60 m) TO 300' (90 m) INTERVALS.

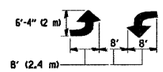

MEDIAN WITH TWO-WAY LEFT TURN LANE

TYPICAL PAINTED MEDIAN MARKING

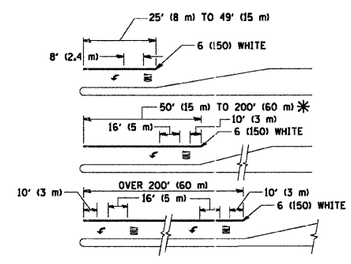

FULL SIZE LETTERS 8' (2.4 m) AND ARROWS SHALL BE USED.
↰ AREA = 15.6 SQ. FT. (1.5 m²) ONLY AREA = 20.8 SQ. FT. (1.9 m²)

✳ TURN LANES IN EXCESS OF 400' (120 m) IN LENGTH MAY HAVE AN ADDITIONAL SET OF ARROW - "ONLY" INSTALLED MIDWAY BETWEEN THE OTHER TWO SETS OF ARROW - "ONLY".

TYPICAL LEFT (OR RIGHT) TURN LANE

TYPICAL TURN LANE MARKING

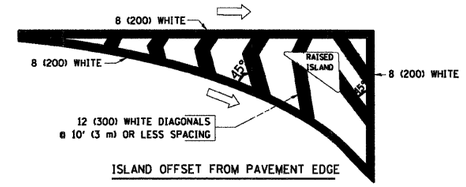

ISLAND OFFSET FROM PAVEMENT EDGE

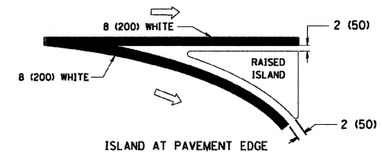

ISLAND AT PAVEMENT EDGE

TYPICAL ISLAND MARKING

TYPE OF MARKING	WIDTH OF LINE	PATTERN	COLOR	SPACING / REMARKS
CENTERLINE ON 2 LANE PAVEMENT	4 (100)	SKIP-DASH	YELLOW	10' (3 m) LINE WITH 30' (9 m) SPACE
CENTERLINE ON MULTI-LANE UNDIVEDED PAVEMENT	2 @ 4 (100)	SOLID	YELLOW	11 (280) C-C
NO PASSING ZONE LINES: FOR ONE DIRECTION FOR BOTH DIRECTIONS	4 (100) 2 @ 4 (100)	SOLID SOLID	YELLOW YELLOW	5½ (140) C-C FROM SKIP-DASH CENTERLINE 11 (280) C-C OMIT SKIP-DASH CENTERLINE BETWEEN
LANE LINES	4 (100) 5 (125) ON FREEWAYS	SKIP-DASH SKIP-DASH	WHITE WHITE	10' (3 m) LINE WITH 30' (9 m) SPACE
DOTTED LINES (EXTENSIONS OF CENTER, LANE OR TURN LANE MARKINGS)	SAME AS LINE BEING EXTENDED	SKIP-DASH	SAME AS LINE BEING EXTENDED	2' (600) LINE WITH 6' (1.8 m) SPACE
EDGE LINES	4 (100)	SOLID	YELLOW-LEFT WHITE-RIGHT	OUTLINE MOUNTABLE MEDIANS IN YELLOW; EDGE LINES ARE NOT USED NEXT TO BARRIER CURB
TURN LANE MARKINGS	6 (150) LINE; FULL SIZE LETTERS & SYMBOLS (8' (2.4m))	SOLID	WHITE	SEE TYPICAL TURN LANE MARKING DETAIL
TWO WAY LEFT TURN MARKING	2 @ 4 (100) EACH DIRECTION 8' (2.4m) LEFT ARROW	SKIP-DASH AND SOLID IN PAIRS	YELLOW WHITE	10' (3 m) LINE WITH 30' (9 m) SPACE FOR SKIP-DASH; 5½ (140) C-C BETWEEN SOLID LINE AND SKIP-DASH LINE SEE TYPICAL TWO-WAY LEFT TURN MARKING DETAIL
CROSSWALK LINES (PEDESTRIAN) A. DIAGONALS (BIKE & EQUESTRIAN) B. LONGITUDINAL BARS (SCHOOL)	2 @ 6 (150) 12 (300) @ 45° 12 (300) @ 90°	SOLID SOLID SOLID	WHITE WHITE WHITE	NOT LESS THAN 6' (1.8 m) APART 2' (600) APART 2' (600) APART SEE TYPICAL CROSSWALK MARKING DETAILS.
STOP LINES	24 (600)	SOLID	WHITE	PLACE 4' (1.2 m) IN ADVANCE OF AND PARALLEL TO CROSSWALK, IF PRESENT. OTHERWISE, PLACE AT DESIRED STOPPING POINT, PARALLEL TO CROSSROAD CENTERLINE, WHERE POSSIBLE
PAINTED MEDIANS	2 @ 4 (100) WITH 12 (300) DIAGONALS @ 45° NO DIAGONALS USED FOR 4' (1.2 m) WIDE MEDIANS	SOLID	YELLOW: TWO WAY TRAFFIC WHITE: ONE WAY TRAFFIC	11 (280) C-C FOR THE DOUBLE LINE SEE TYPICAL PAINTED MEDIAN MARKING.
GORE MARKING AND CHANNELIZING LINES	8 (200) WITH 12 (300) DIAGONALS @ 45°	SOLID	WHITE	DIAGONALS: 15' (4.5 m) C-C (LESS THAN 30MPH (50 km/h)) 20' (6 m) C-C 30MPH (50 km/h) TO 45MPH (70 km/h)) 30' (9 m) C-C (OVER 45MPH (70 km/h))
RAILROAD CROSSING	24 (600) TRANSVERSE LINES; "RR" IS 6' (1.8 m) LETTERS; 16 (400) LINE FOR "X"	SOLID	WHITE	SEE STATE STANDARD 780001 AREA OF: "R"=3.6 SQ. FT. (0.33 m²) EACH "X"=54.0 SQ. FT. (5.0 m²)
SHOULDER DIAGONALS	12 (300) @ 45°	SOLID	WHITE - RIGHT YELLOW - LEFT	50' (15 m) C-C (LESS THAN 30MPH (50 km/h)) 75' (25 m) C-C (30 MPH (50 km/h) TO 45MPH (70 km/h)) 150' (45 m) C-C (OVER 45MPH (70 km/h))

FOR FURTHER DETAILS ON PAVEMENT MARKING REFER TO STANDARD SPECIFICATIONS FOR ROAD AND BRIDGE CONSTRUCTION AND STATE STANDARD 780001.

All dimensions are in inches (millimeters) unless otherwise shown.

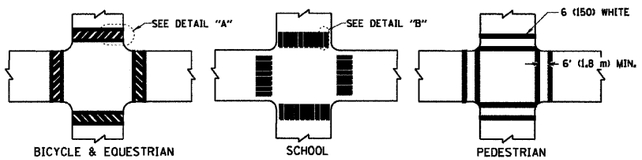

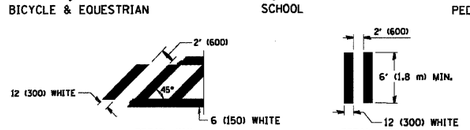

TYPICAL CROSSWALK MARKING

FILE NAME = W:\diststd\22x34\tc13.dgn	USER NAME = gaglionobt	DESIGNED - EVERS	REVISED -T. RAMMACHER 10-27-94	STATE OF ILLINOIS DEPARTMENT OF TRANSPORTATION	DISTRICT ONE TYPICAL PAVEMENT MARKINGS	F.A.P. RTE.	SECTION	COUNTY	TOTAL SHEETS / SHEET NO.
		DRAWN -	REVISED -A. HOUSEH 10-09-96			303	(132, 133 & 134) RS-5	MCHENRY	36 / 33
	PLOT SCALE = 50.000 ' / IN.	CHECKED -	REVISED -A. HOUSEH 10-17-96				TC-13	CONTRACT NO. 62496	
	PLOT DATE = 1/4/2008	DATE - 03-19-90	REVISED -T. RAMMACHER 01-06-00		SCALE: NONE / SHEET NO. 1 OF 1 SHEETS / STA. / TO STA.	FED. ROAD DIST. NO. 1	ILLINOIS	FED. AID PROJECT	

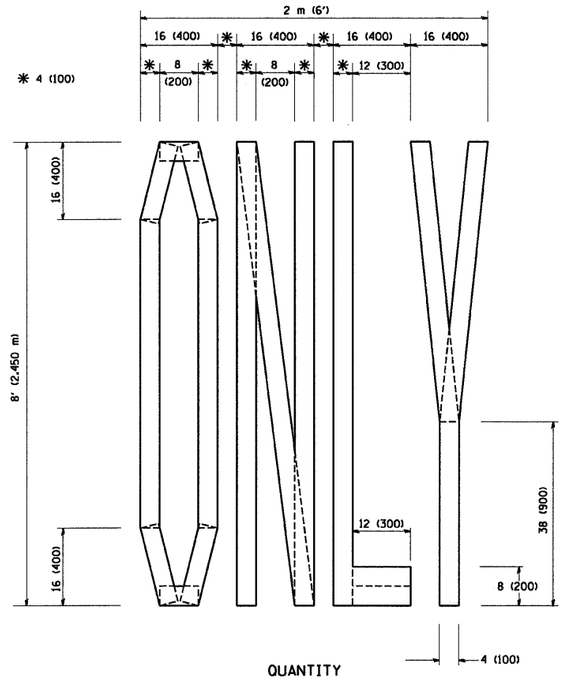

QUANTITY
4 (100) LINE = 64.1 ft. (19.7 m)
21.1 sq. ft. (1.97 sq. m)

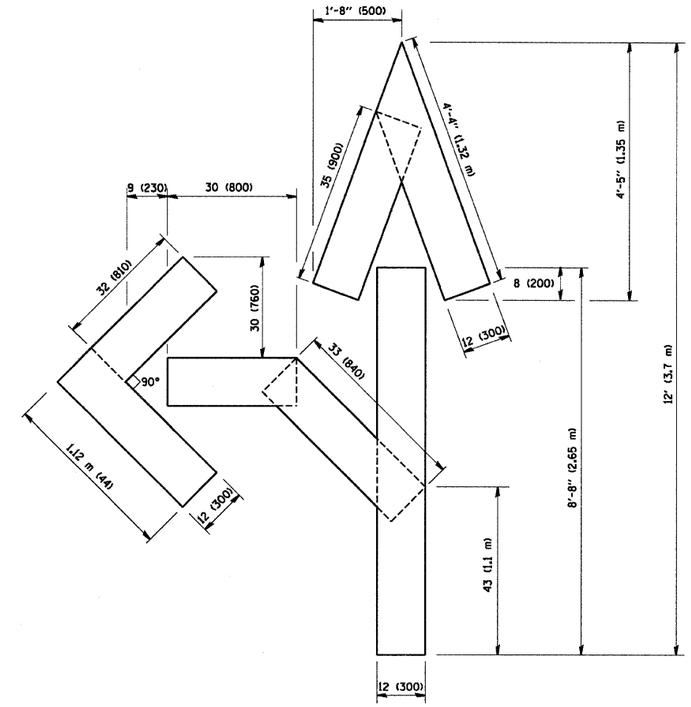

QUANTITY
4 (100) LINE = 82.5 ft. (25.3 m)
27.5 sq. ft. (2.53 sq. m)

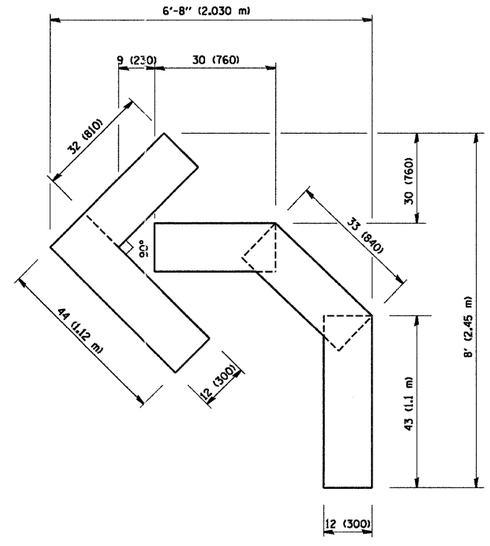

QUANTITY
4 (100) LINE = 45.5 ft. (13.9 m)
15.2 sq. ft. (1.39 sq. m)

All dimensions are in inches (millimeters) unless otherwise shown.

FILE NAME = W:\diststd\22x34\tc16.dgn	USER NAME = gaglianobt	DESIGNED -	REVISED -T. RAMMACHER 06-05-96	STATE OF ILLINOIS DEPARTMENT OF TRANSPORTATION	PAVEMENT MARKING LETTERS AND SYMBOLS FOR TRAFFIC STAGING			F.A.P. RTE.	SECTION	COUNTY	TOTAL SHEETS	SHEET NO.
		DRAWN -	REVISED -T. RAMMACHER 11-04-97					303	(132, 133 & 134) RS-5	MCHENRY	36	34
	PLOT SCALE = 50.0000 ' / IN.	CHECKED -	REVISED -T. RAMMACHER 03-02-98					TC-16		CONTRACT NO. 62496		
	PLOT DATE = 1/4/2008	DATE - 09-18-94	REVISED -E. GOMEZ 08-28-00		SCALE: NONE	SHEET NO. 1 OF 1 SHEETS	STA. TO STA.	FED. ROAD DIST. NO. 1	ILLINOIS	FED. AID PROJECT		

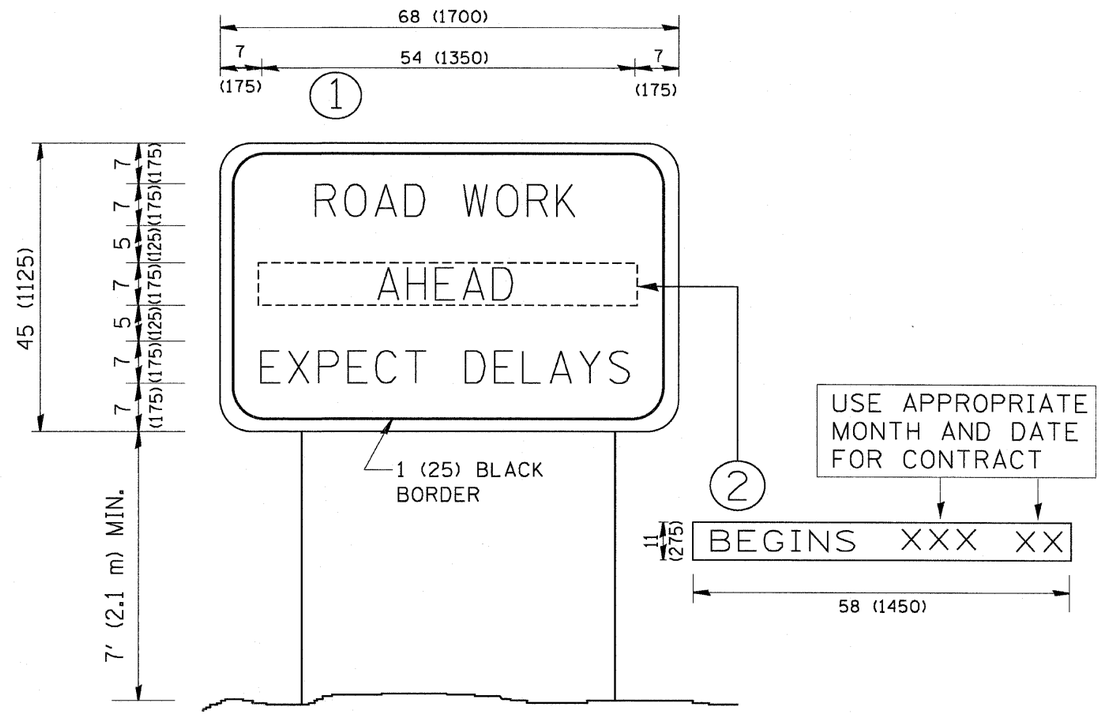

NOTES:

1. USE BLACK LETTERING ON ORANGE BACKGROUND.
2. ERECT SIGNS IN ADVANCE OF THE LOCATION FOR THE "ROAD CONSTRUCTION AHEAD" SIGN AT LOCATIONS AS DIRECTED BY THE ENGINEER.
3. ERECT SIGN 1 WITH INSTALLED PANEL 2 ONE WEEK PRIOR TO THE START OF CONSTRUCTION.
4. REMOVE PANEL 2 SOON AFTER THE START OF CONSTRUCTION.
5. SEE SPECIAL PROVISION FOR "TEMPORARY INFORMATION SIGNING" FOR ADDITIONAL INFORMATION.
6. ONE SIGN ASSEMBLY EQUALS 25.70 SQ. FT. (2.3 SQ. M.)
7. SHALL BE PAID FOR AS TEMPORARY INFORMATION SIGNING.

ALL DIMENSIONS ARE IN INCHES (MILLIMETERS) UNLESS OTHERWISE SHOWN.

FILE NAME = W:\diststd\22x34\tc22.dgn	USER NAME = gaglionobt	DESIGNED -	REVISED - R. MIRS 09-15-97	STATE OF ILLINOIS DEPARTMENT OF TRANSPORTATION	ARTERIAL ROAD INFORMATION SIGN			F.A.P. RTE.	SECTION	COUNTY	TOTAL SHEETS / SHEET NO.
		DRAWN -	REVISED - R. MIRS 12-11-97					303	(132, 133 & 134) RS-5	MCHENRY	36 / 35
	PLOT SCALE = 50.000 ' / IN.	CHECKED -	REVISED - T. RAMMACHER 02-02-99					TC-22		CONTRACT NO. 62496	
	PLOT DATE = 1/4/2008	DATE -	REVISED - C. JUCIUS 01-31-07		SCALE: NONE	SHEET NO. 1 OF 1 SHEETS	STA. TO STA.	FED. ROAD DIST. NO. 1	ILLINOIS	FED. AID PROJECT	

LOOPS NEXT TO SHOULDERS

PROVIDE A PAVEMENT REPLACEMENT NOTE WHICH SHOULD EQUAL 3' (900 mm) X WIDTH OF PAVED SHOULDER.

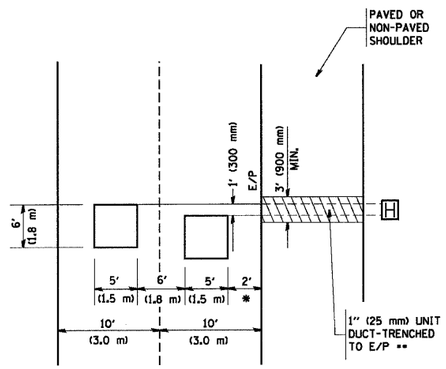

* = (600 mm)

** UNIT DUCT IS TO BE SHOWN ON PLAN SHEETS BUT SHALL NOT BE INCLUDED IN THE PAY ITEMS.

LEFT TURN LANES WITH MEDIANS
VOLUME DENSITY ("FAR OUT" DETECTION)
ON SAME APPROACH

(PROTECTED / PERMITTED LEFT TURN PHASING)

HANDHOLE LOCATION MAY VARY DEPENDING ON GEOMETRICS AND DESIGN OF TRAFFIC SIGNALS. HEAVY-DUTY HANDHOLES TO BE USED WHEN THE MEDIAN IS MOUNTABLE. REFER TO STANDARD 814001 TO ENSURE THAT HANDHOLE FITS IN MEDIAN.

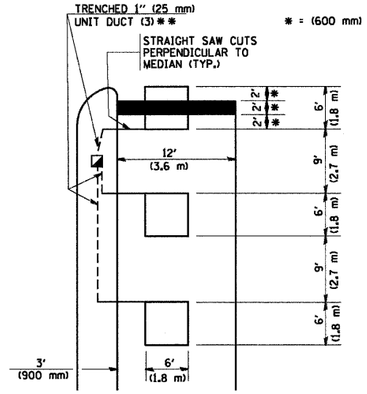

** UNIT DUCT IS TO BE SHOWN ON PLAN SHEETS BUT SHALL NOT BE INCLUDED IN THE PAY ITEMS.

NOTE: DUAL LEFT TURNS NOT SHOWN REFER TO PLAN SHEET FOR DETECTOR LOOP REPLACEMENT

LEFT TURN LANES WITHOUT MEDIANS
VOLUME DENSITY ("FAR OUT" DETECTION)
ON SAME APPROACH

(PROTECTED / PERMITTED LEFT TURN PHASING)

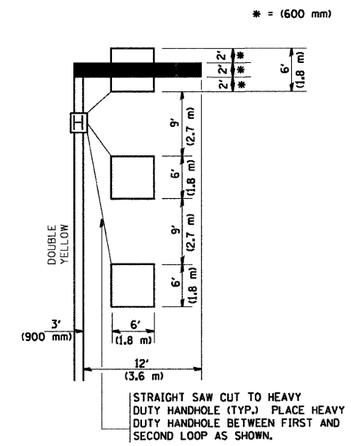

NOTE: DUAL LEFT TURNS NOT SHOWN REFER TO PLAN SHEET FOR DETECTOR LOOP REPLACEMENT

ARTERIAL-VOLUME DENSITY ("FAR OUT" DETECTION)
CROSS STREET-VOLUME DENSITY ("FAR OUT" DETECTION)

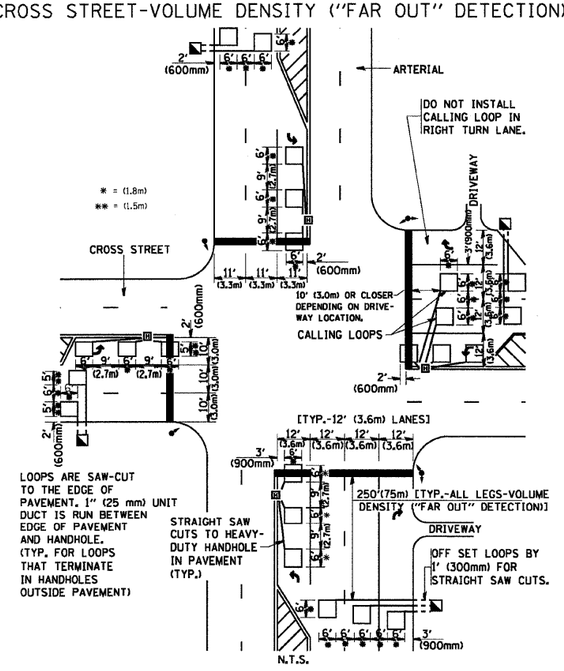

DETAIL 1
N.T.S.

ARTERIAL-VOLUME DENSITY ("FAR OUT" DETECTION)
CROSS STREET-NON VOLUME DENSITY ("UPTIGHT" PRESENCE DETECTION)

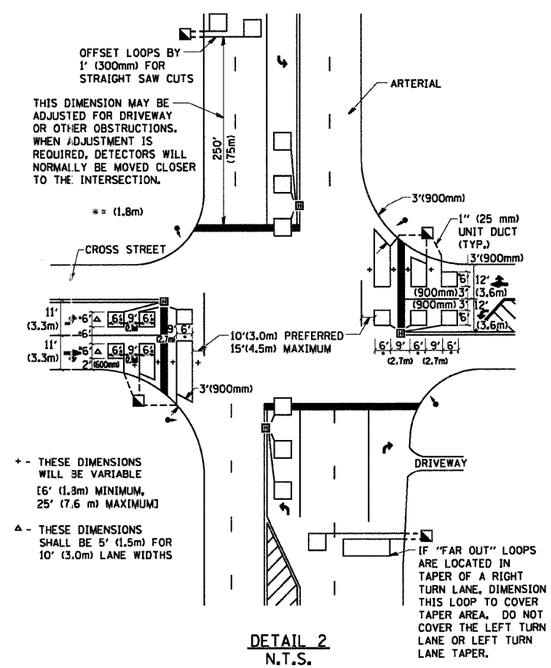

DETAIL 2
N.T.S.

NOTES:

VEHICLES LOOP DETECTORS

* ALL LEAD IN CABLE SHALL BE TWO CONDUCTOR NO. 14 TWISTED, SHIELDED.
* EACH DETECTOR LOOP SHALL HAVE ITS OWN SAW CUT FROM THE LOOP TO THE EDGE OF PAVEMENT OR TO A HANDHOLE IN THE PAVEMENT.
* EACH DETECTOR LOOP SHALL HAVE ITS OWN ONE INCH (25 mm) UNIT DUCT BETWEEN THE EDGE OF PAVEMENT AND THE FIRST HANDHOLE OR JUNCTION BOX. EACH UNIT DUCT RUN SHALL BE SHOWN ON THE PLANS BY THE DESIGNER, BUT SHALL NOT BE PAID FOR SEPARATLY. THIS ITEM IS INCIDENTAL TO THE PAY ITEM FOR DETECTOR LOOPS.
* ONE DIMENSION OF ALL DETECTOR LOOPS SHALL BE SIX FEET (1.8 m)
* EACH LANE OF NON-LOCKING, PRESENCE DETECTION AND EACH LANE OF A DOUBLE LEFT TURN LANE REQUIRES A SEPARATE INDUCTIVE LOOP DETECTOR AND LEAD IN CABLE.
* WHEN NON-LOCKING, PRESENCE DETECTION IS USED, MORE THAN ONE LOOP PER LANE IS REQUIRED BEHIND THE STOP BAR (i.e. 1-1/2, 1-3/4, 2).
* WHEN SYSTEM LOOPS ARE REQUIRED ON AN APPROACH OF AN INTERSECTION, THE LOOPS USED FOR VOLUME DENSITY AND INTERSECTION TIMING SHALL ALSO BE USED AS SYSTEM DETECTORS. EACH ONE OF THESE TYPE OF LOOPS REQUIRES A SEPARATE TWO CONDUCTOR NO. 14 TWISTED SHIELDED CABLE AND A SEPARATE INDUCTIVE LOOP DETECTOR WHEN NEW CONTROLLERS ARE UTILIZED. THE DESIGNER SHALL LABEL THESE TYPES OF LOOPS AS "INTERSECTION AND SAMPLING (SYSTEM) DETECTORS" ON THE SIGNAL LAYOUT, THE INTERCONNECT PLAN AND THE SYSTEM CABLE PLAN. WHEN AN EXISTING CONTROLLER IS UTILIZED FOR THIS TYPE OF DETECTION, THE PAY ITEM "INDUCTIVE LOOP DETECTOR WITH SYSTEM OUTPUT" SHOULD BE USED.

PLACEMENT OF DETECTORS

THE FOLLOWING FIGURES REPRESENT THE MOST COMMON DETECTOR LOOP LOCATIONS AND SIZES. ADJUSTMENTS WILL BE NECESSARY FOR SPECIFIC GEOMETRIC CONSIDERATIONS.

LOCATIONS AND DEMENSIONS OF DETECTOR LOOPS ARE REQUIRED ON ALL SIGNAL LAYOUT PLAN SHEETS.

"FAR OUT" DETECTION REFERS TO LOCKING, PRESENCE TYPE DETECTION LOCATED IN THRU LANES, RIGHT TURN LANES, AND RIGHT TURN LANE TAPER AREAS (IF APPLICABLE), USUALLY 250' (75 m) IN ADVANCE OF STOP BARS. "UPTIGHT" DETECTION REFERS TO NON-LOCKING PRESENCE TYPE DETECTION LOCATED IN ALL LANES AND 10'-15' (3.0 m-4.5 m) BEHIND THE CROSSING STREET'S EDGE OF PAVEMENT EXTENDED.

NOTE:

ALL DETAILS AND NOTES SHOWN ARE FROM THE I.D.O.T. DISTRICT 1 TRAFFIC SIGNAL DESIGN GUIDELINES DATED JANUARY 1995

THIS DRAWING HAS BEEN PREPARED TO ASSIST THE RESIDENT ENGINEER FOR ALL ROADWAY RESURFACING OR S.M.A.R.T. PROJECTS WHERE THE DIMENSIONS ARE NOT SHOWN ON THE PLANS AND THE FINAL LOCATIONS FOR CROSSWALKS OR STOP BARS ARE NOT DETERMINED.

FILE NAME = W:\diststd\22x34\ts07.dgn	USER NAME = gaglionobt	DESIGNED -	REVISED -
		DRAWN -	REVISED -
	PLOT SCALE = 50.0000 ' / IN.	CHECKED - R.K.F.	REVISED -
	PLOT DATE = 1/4/2008	DATE -	REVISED -

STATE OF ILLINOIS
DEPARTMENT OF TRANSPORTATION

DISTRICT 1 - DETECTOR LOOP INSTALLATION
DETAILS FOR ROADWAY RESURFACING

SCALE: NONE | SHEET NO. 1 OF 1 SHEETS | STA. | TO STA.

F.A.P. RTE.	SECTION	COUNTY	TOTAL SHEETS	SHEET NO.
303	(132, 133 & 134) RS-5	MCHENRY	36	36
	TS-07	CONTRACT NO. 62496		
FED. ROAD DIST. NO. 1	ILLINOIS	FED. AID PROJECT		