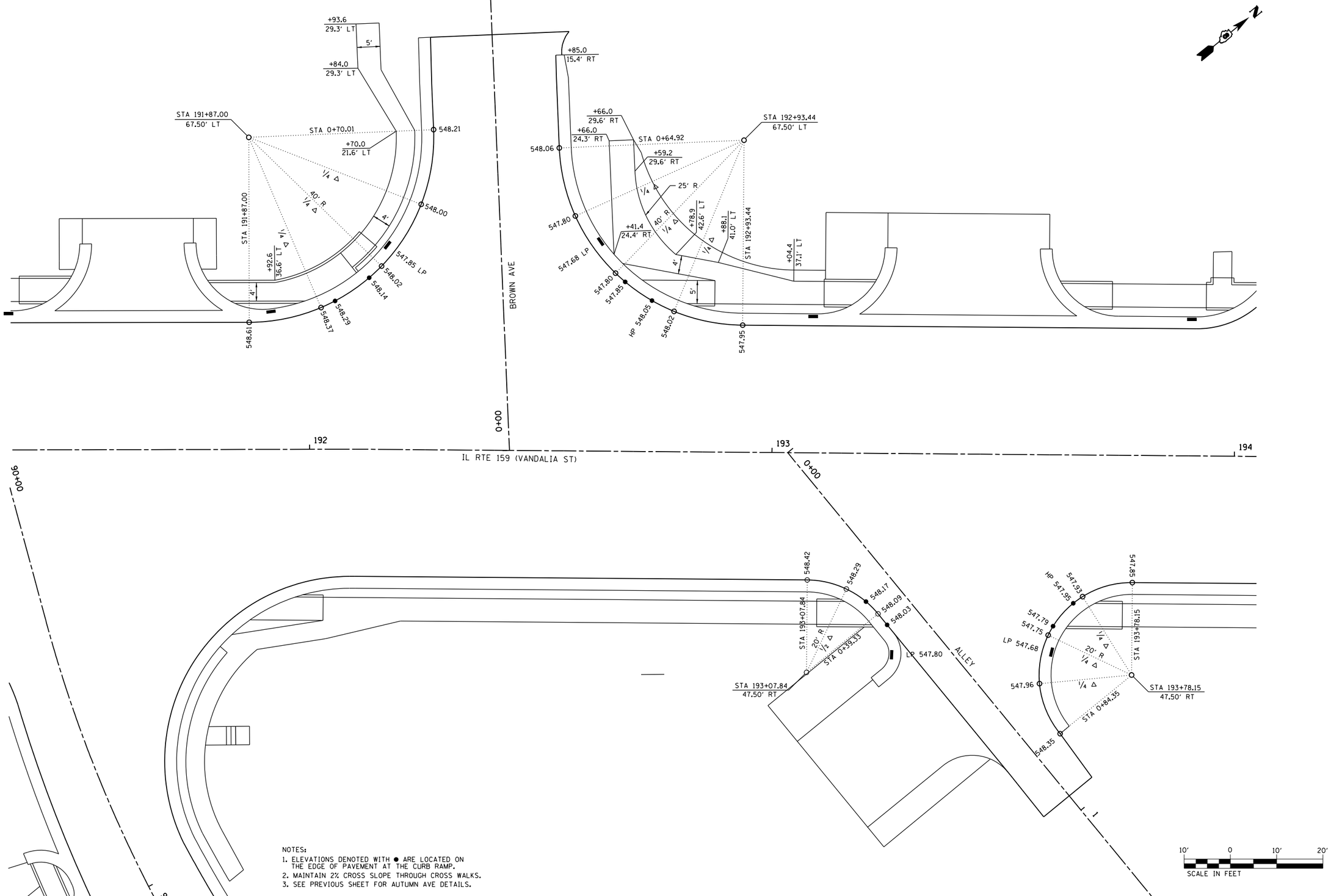

NOTES:

1. ELEVATIONS DENOTED WITH ● ARE LOCATED ON THE EDGE OF PAVEMENT AT THE CURB RAMP.
2. MAINTAIN 2% CROSS SLOPE THROUGH CROSS WALKS.
3. SEE PREVIOUS SHEET FOR AUTUMN AVE DETAILS.

FILE NAME = P:\Projects\513501\CADD\DGN\D876B85-sht-intersec-detail.dgn	USER NAME = default	DESIGNED - AGF	REVISED -	STATE OF ILLINOIS DEPARTMENT OF TRANSPORTATION	INTERSECTION GEOMETRIC DETAILS BROWN AVE /ALLEY AT 193+03
	PLOT SCALE = 20.0000 ' / in.	DRAWN - AGF	REVISED -		
	PLOT DATE = 1/25/2013	CHECKED - CLS	REVISED -		
		DATE - 01/25/2013	REVISED -		SCALE: 1" = 10' SHEET NO. 9 OF 22 SHEETS STA. N/A TO STA. N/A

F.A.P. RTE.	SECTION	COUNTY	TOTAL SHEETS	SHEET NO.
600	60-(30,31,128)-3	MADISON	529	139
		CONTRACT NO. 76B85		
		ILLINOIS FED. AID PROJECT		