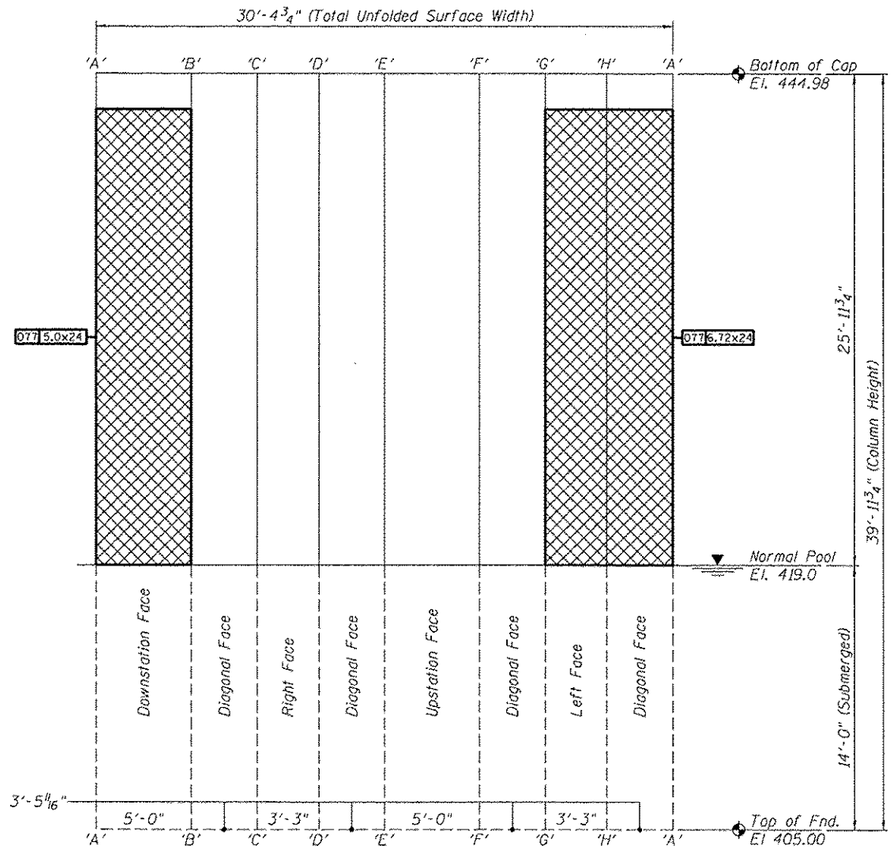

PIER NO. 3 - ELEVATION - LEFT COLUMN

Column Surface Shown Unfolded

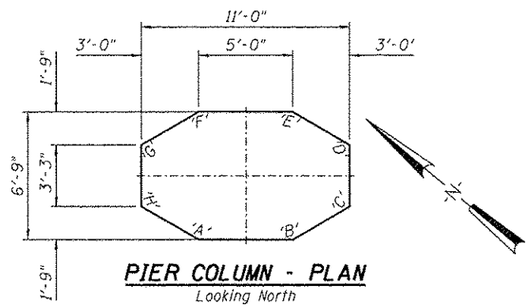

PIER COLUMN - PLAN

Looking North

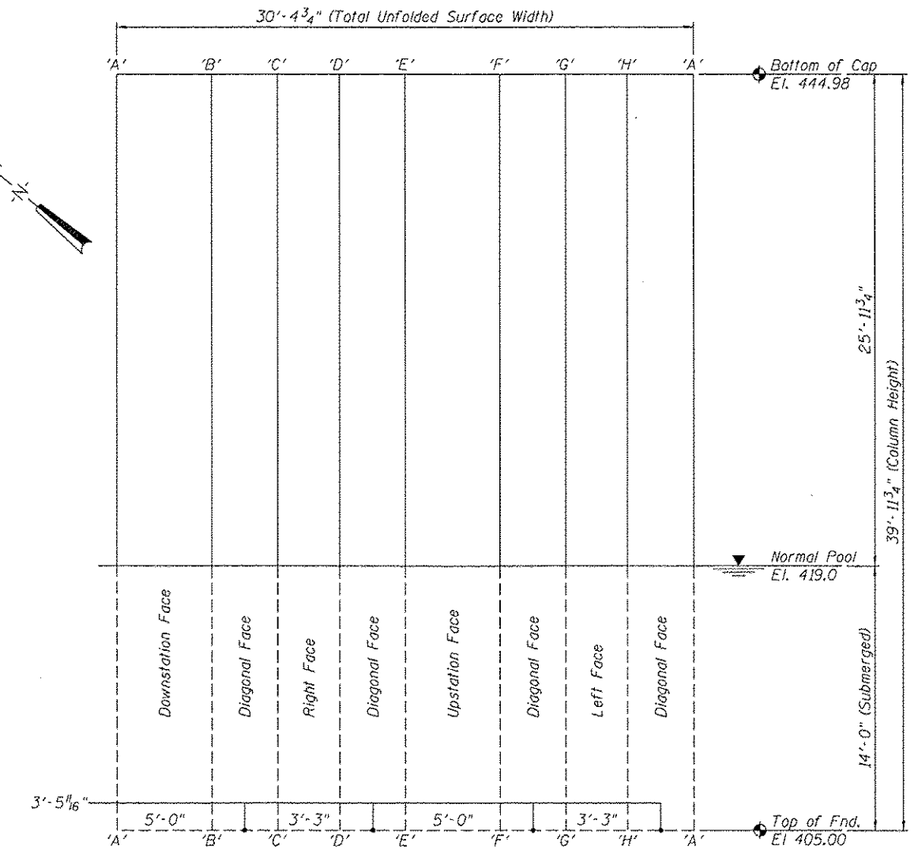

PIER NO. 3 - ELEVATION - RIGHT COLUMN

Column Surface Shown Unfolded

REPAIRS LIST - PIER 3 - COLUMNS

I.D.	Description	Pay Item	Units	Quantity
077	Map Cracking	Concrete Sealer	SQ. FT.	120.0
077	Map Cracking	Concrete Sealer	SQ. FT.	161.3
-	-	-	-	-
-	-	-	-	-
-	-	-	-	-
-	-	-	-	-
-	-	-	-	-
-	-	-	-	-
-	-	-	-	-

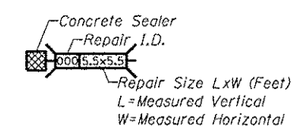

CONCRETE SEALER

DESIGNED -	EXAMINED	DATE -	STATE OF ILLINOIS DEPARTMENT OF TRANSPORTATION
CHECKED -	ENGINEER OF STRUCTURAL SERVICES		
DRAWN Rod	PASSED		
CHECKED MNM	ENGINEER OF BRIDGES AND STRUCTURES		

REPAIRS TO – PIER NUMBER 3 – COLUMNS
STRUCTURE NO. 060-0255
SHEET NO. 22 OF 48 SHEETS

F.A.P. RTE.	SECTION	COUNTY	TOTAL SHEETS	SHEET NO.
304	100B-10S-1	MADISON	58	32
		CONTRACT NO. 76E73		
		ILLINOIS FED. AID PROJECT		

HANSON
© Copyright Hanson Professional Services Inc. 2012