CONTRACT NO. 60B02

F.A.I. RTE.	SECTION	COUNTY	TOTAL SHEETS	SHEET NO.
55	2005-085 SG	WILL	28	20
STA.		TO STA.		
FED. ROAD DIST. NO.	ILLINOIS	FED. AID PROJECT		

* Anchor rod shall be ground or filed to bright metal at clamp and cable connection location.

** By others in Future Contract

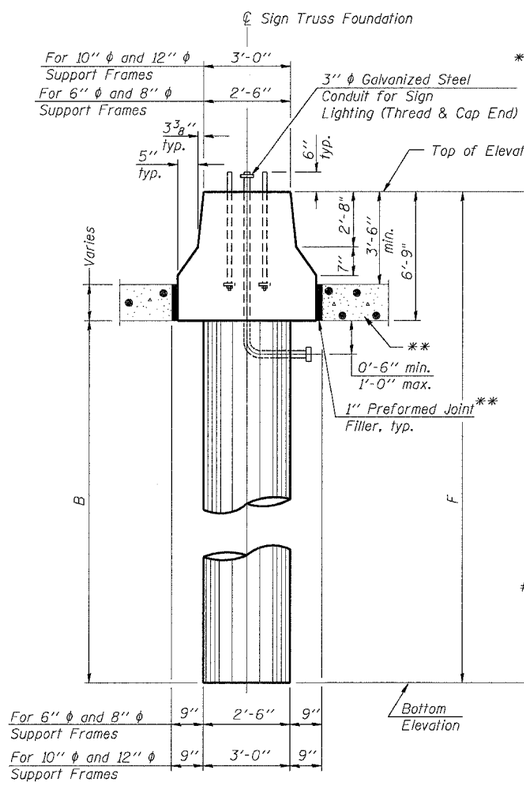

END VIEW

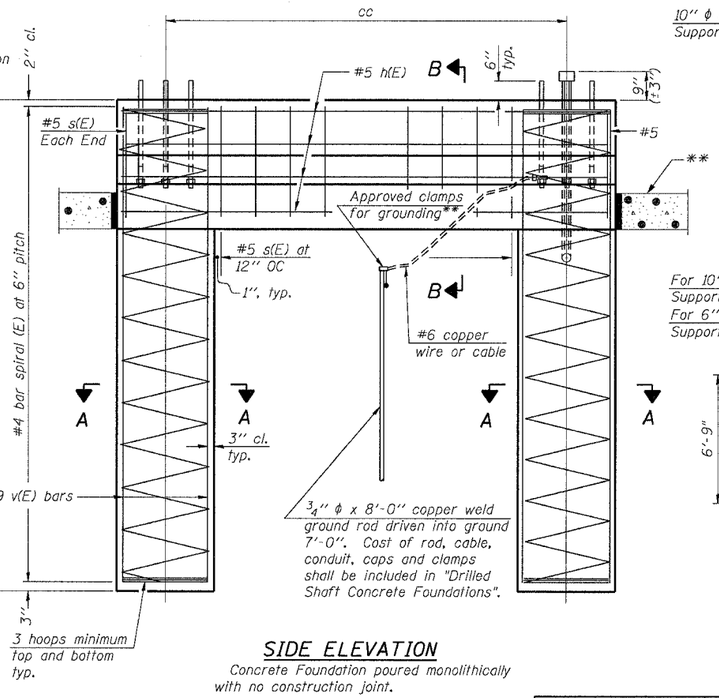

SIDE ELEVATION

Concrete Foundation poured monolithically with no construction joint.

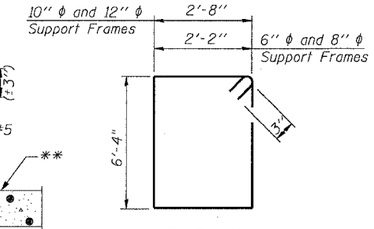

BAR s(E)

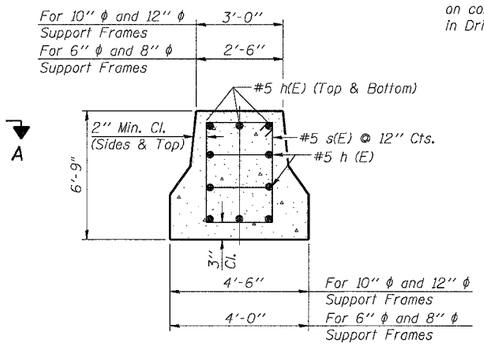

SECTION B-B

NOTES:

The foundation dimensions shown are based on the presence of mostly cohesive soils with an average Unconfined Compressive Strength (Qu) of at least 1.25 tsf, which must be determined by previous soil investigations at the jobsite. When other conditions are indicated, the boring data will be included in the plans and the foundation dimensions shown will be the result of site specific designs.

If the conditions encountered are different than those indicated, the Contractor shall notify the Engineer to determine if the foundation dimensions need to be modified. If dimensions "B" or "F" are revised by more than 12" by the Contractor, "as-built" plans shall be prepared and submitted to the District Bureau of Operations for future reference.

No sonotubes or decomposable forms shall be used below the lower conduit entrance.

Permanent metal forms or other shielding may not be left in place below that elevation without the Engineer's written permission.

Concrete shall be placed monolithically, without construction joints.

Backfill shall be placed per Article 502 of Standard Specification and prior to erection of support column.

A normal surface finish followed by a Bridge Seat Sealer application will be required on concrete surfaces above the lowest elevation 6" below finished ground line. Cost included in Drilled Shaft Concrete Foundation.

BAR LIST - EACH FOUNDATION

Bar	Number	Size	Length	Shape	
h(E)	10	#5	M less 4"		
s(E)	Varies	#5	Varies	□	6" ϕ and 8" ϕ Support Frame
v(E)	16	#9	F less 0'-5"		
v(E)	24	#9	F less 0'-5"		10" ϕ and 12" ϕ Support Frame
#4(E) bar spiral _ see Side Elevation					

Structure Number	Station	Left Foundation				Right Foundation				Class SI Concrete (Cu. Yds.)
		Elevation Top	Elevation Bottom	B	F	Elevation Top	Elevation Bottom	B	F	
IS0991055R255.26	469+00.00	596.41	571.66	18'-0"	24'-9"	—	—	—	—	20.3

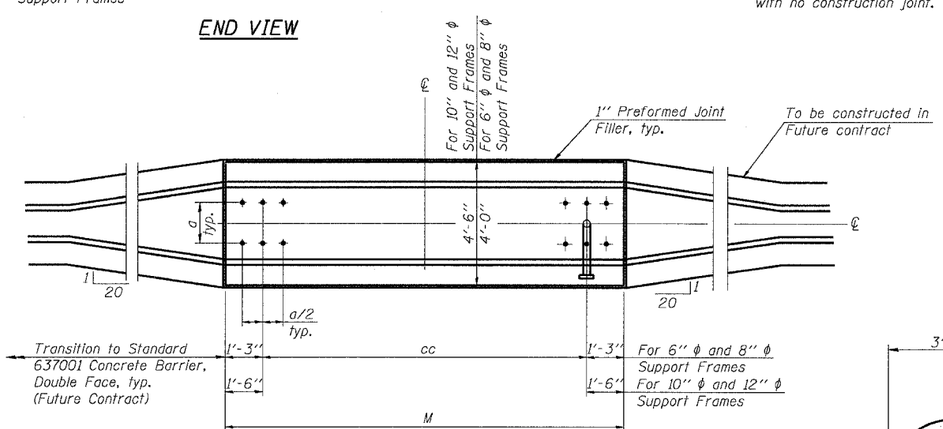

PLAN

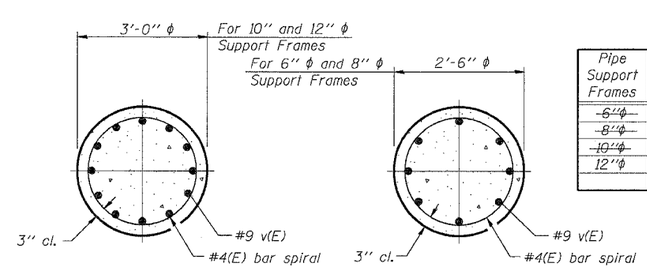

SECTION A-A

Pipe Support Frames	cc	M	a	a/2
~~6" ϕ~~	~~7'-0"~~	~~9'-6"~~	~~0'-11"~~	~~5 1/2"~~
~~8" ϕ~~	~~7'-6"~~	~~10'-0"~~	~~1'-1 1/2"~~	~~6 3/4"~~
~~10" ϕ~~	~~8'-3"~~	~~10'-9"~~	~~1'-3"~~	~~7 1/2"~~
12" ϕ	9'-0"	12'-0"	1'-6"	9"

OS4-MED, SPECIAL 1-7-05

SHT. S-13 OF 15

REVISIONS	
NAME	DATE

ILLINOIS DEPARTMENT OF TRANSPORTATION
FAI ROUTE 55 (I-80 TO U.S. 30)
DYNAMIC MESSAGING SIGNS

OVERHEAD SIGN STRUCTURES
DRILLED SHAFT DETAILS
MEDIAN SUPPORT

SCALE: DRAWN BY MRK
DATE 03/27/06 CHECKED BY MJK

TENG
TENG & ASSOCIATES, INC.
ENGINEERS/ARCHITECTS/PLANNERS
CHICAGO, ILLINOIS

PLOT DATE = $DATE$
FILE NAME = $FILE$
PLOT SCALE = $SCALE$
USER NAME = $USER$

..\BD991A002.DGN
3-27-2006, 14:06:47

KARNATHR S:\DOCUMENT\823515R1\STRUCT\DGN\SS0941A022.SHT