F.A.I. RTE.	SECTION	COUNTY	TOTAL SHEETS	SHEET NO.
57	*	COOK	916	5751
STA.	TO STA.			
FED. ROAD DIST. NO. 1	ILLINOIS	FED. AID PROJECT		

CONTRACT NO. 62304
*(1516.1, 1717, & 1818) R-4

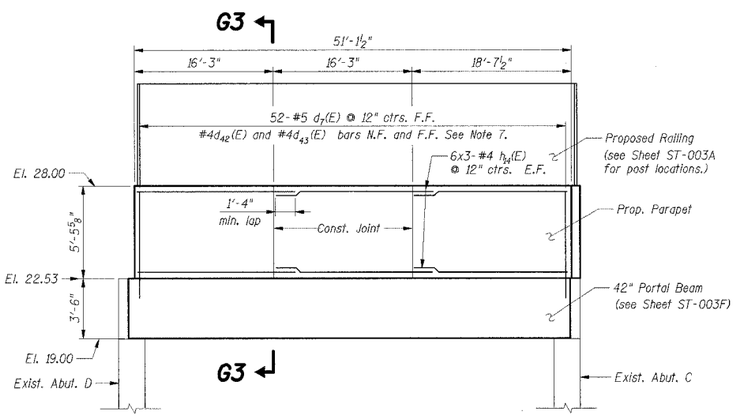

ELEVATION OF PARAPET AT PORTAL BEAM B1

(looking North)

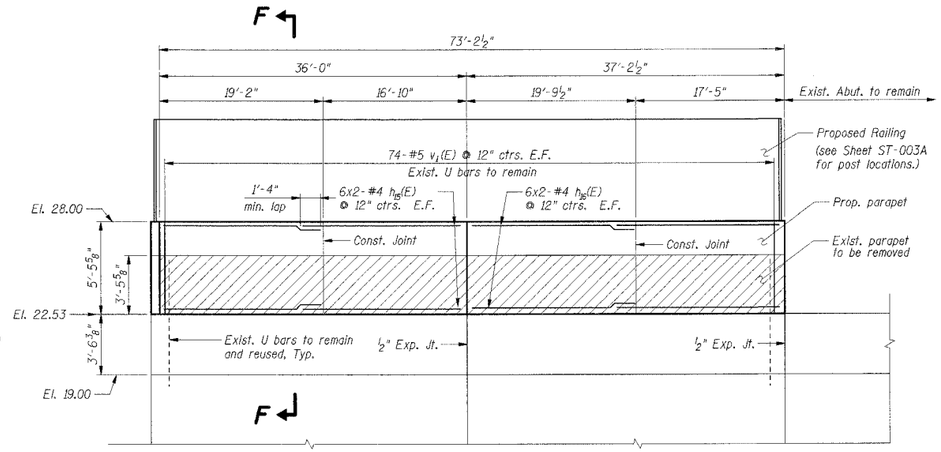

ELEVATION OF PARAPET C1

(looking West)

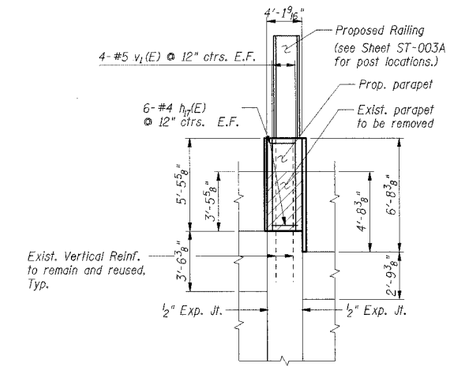

ELEVATION OF PARAPET CHAMFER

(looking Northwest)

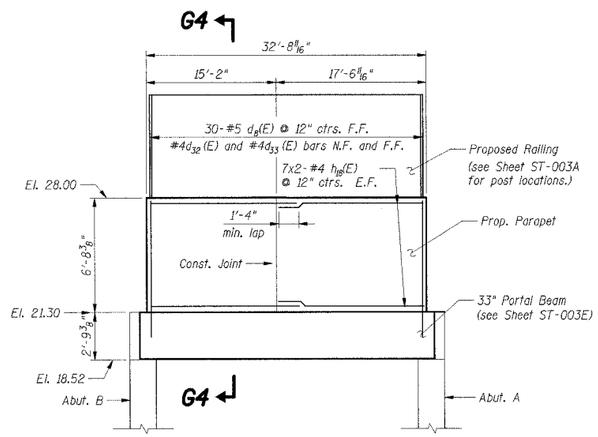

ELEVATION OF PARAPET AT PORTAL BEAM B124

(looking North)

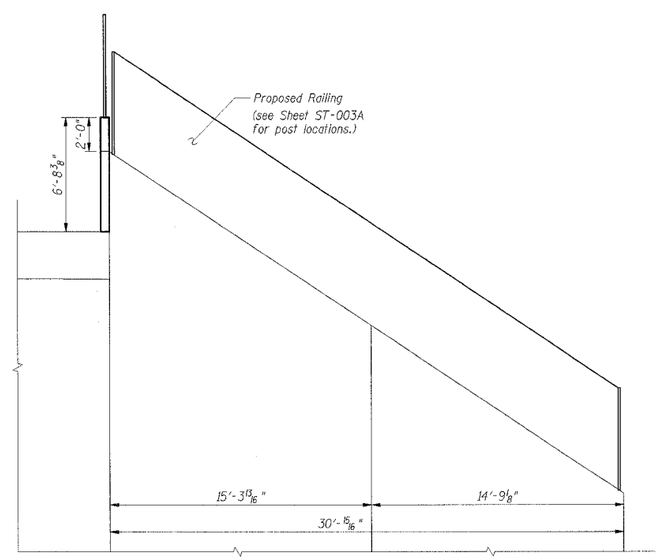

ELEVATION OF RETAINING WALL B

(looking East)

LEGEND:

Concrete Removal

NOTES:

1. Work this Shts. ST-003A, ST-003J, ST-003K.
2. For Sections F-F, G3-G3 and G4-G4, see Sheet ST-003J.
3. For details, bar list, and bill of material see Sheet ST-003K.
4. Bars designated (E) shall be Epoxy Coated.
5. N.F. denotes Near Face.
   E.F. denotes Each Face.
6. Bars indicated thus: 4x2#6 etc. indicates 4 lines of bars with 2 lengths per line.
7. See Shts. ST-003E and ST-003F for d(E) bars cast with portal beams.

SHT. ST-003I

REVISIONS	
NAME	DATE
⚠1 ADDENDUM 1	05/08/06

ILLINOIS DEPARTMENT OF TRANSPORTATION
F.A.I. ROUTE 57 (INTERSTATE 57) OVER
F.A.I. ROUTE I-94 SB & CTA TRACKS-BRIDGE REPAIRS
SN 016-0073
COOK COUNTY
SECTION (1516.1, 1717, & 1818) R-4
PARAPET ELEVATIONS II

DATE: 05/08/06
DRAWN BY: MDB
CHECKED BY: BGK

TENG
TENG & ASSOCIATES, INC.
ENGINEERS/ARCHITECTS/PLANNERS
209 N. MICHIGAN AVE., CHICAGO, IL 60601
TELEPHONE 312.616.0000

⚠1 Added Sheet 05/08/2006, MDB

..\MBTG047.DGN, ..\BRKORDER.DGN, ..\ST003VNB.DGN, ..\ALTGOVSL.DGN, ..\CPFGOW4L.DGN, ..\DWPGOWTY.DGN, ..\RDWGOV55.DGN, ..\HPGOOT46.DGN, ..\SUPGOOYX.DGN, ..\GPFGOOYX.DGN, ..\GPFGOOYOY.DGN
5-01-2006, 7:19:43 T:\DOCUMENT\1930\BRIDGE\STRUCT\QCN\ST003VNI.DGN LEE4C