F.A.I. RTE.	SECTION	COUNTY	TOTAL SHEETS	SHEET NO.
94	*	COOK	916	124
STA. 1990+65 (NB I-57) 1990+48 (NB FORD) TO STA. 2316+00 (NB RYAN)				
FED. ROAD DIST. NO.	ILLINOIS	FED. AID PROJECT		

* (1516.1, 1717, & 1818) R-4

6230

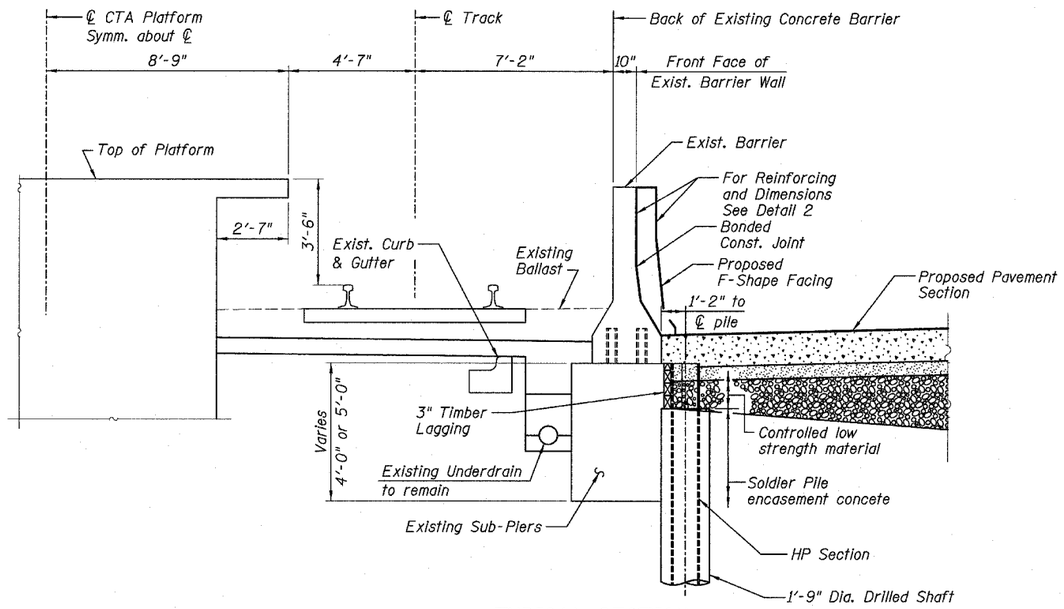

TYPICAL SECTION BETWEEN SUB-PIERS

(Pipe Underdrain not shown)

Contractor to cut and dispose of soldier pile tops as required for paving and as directed by the Engineer. Cost to be included in "Furnishing Soldier Piles (HP Section)".

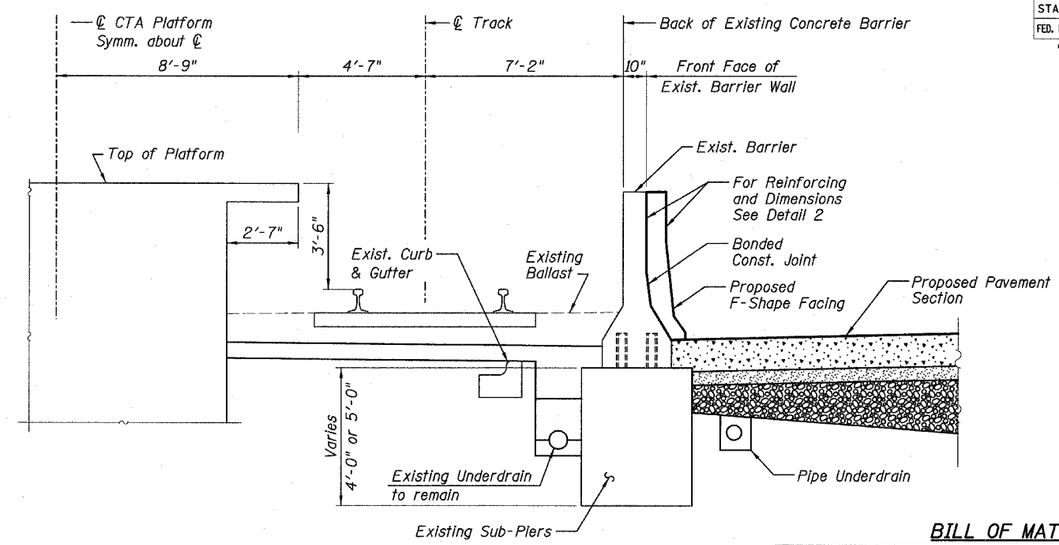

TYPICAL SECTION AT SUB-PIER

LEGEND:

- Concrete Removal
- PCC Pavement
- BAM
- Sub Base

BILL OF MATERIAL

Bar	79th No.	87th No.	95th No.	Size	Length	Shape
d3(E)	681	515	652	#4	4'-9"	
d4(E)	681	515	652	#4	2'-8"	
d12(E)	4	4	2	#4	3'-4"	
h1(E)	156	108	138	#4	29'-7"	
h3(E)	1022	773	977	#4	1'-6"	
h12(E)	6	6	3	#4	1'-4"	
h14(E)	8	8	4	#4	2'-2"	

	Item	Unit	79th Qty	87th Qty	95th Qty
	Furnishing Soldier Piles (HP Section)	Foot	1428	1068	1320
	Drilling and Setting Soldier Piles (in Soil)	Cu. Ft.	3731	2803	3703
	Untreated Timber Lagging	Sq. Ft.	1138	860	981
	Reinforcement Bars, Epoxy Coated	Pound	7520	5490	6950
*	Concrete Structures	Cu. Yd.	83	63	80
	Protective Coat	Sq. Yd.	483	366	463
	Structure Excavation	Cu. Yd.	141	108	147

* Coarse Aggregate shall meet the requirements of Article 1004.01-1004.02 of the Standard Specifications except the gradation will be limited to CA-11 or CA-14.

NOTES:

1. Drilling and grouting of #4 h3(E) bars shall be in accordance with Section 584 of the Standard Specifications.
2. #4 d4(E) bars shall be seated in their final position prior to the placement of the concrete shoulder. Bars shall not be mucked into place.
3. The cost of drilling holes, furnishing and placing Epoxy Grout and setting #4 h3(E) bars shall be included in the cost for Concrete Structures.
4. Provide joints in facing to match those in the existing barrier, see Sht B1 for details.
5. h1(E) bars shall be cut as needed for fit.
6. See Sht. B1 for bar detailing.

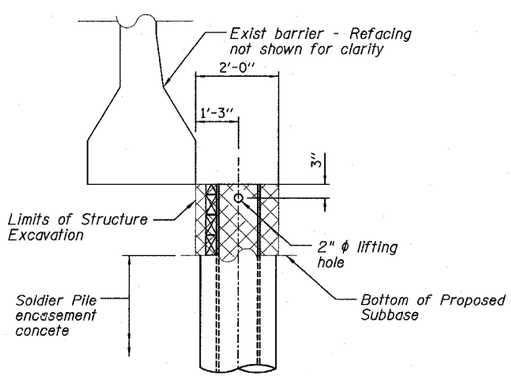

MISCELLANEOUS DETAILS

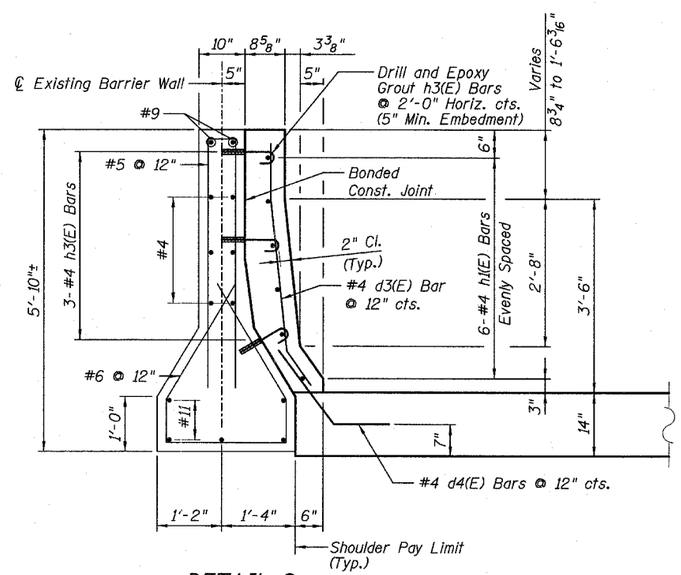

DETAIL 2

TY·LIN INTERNATIONAL

SHEET B2 OF 8

REVISIONS	
NAME	DATE

ILLINOIS DEPARTMENT OF TRANSPORTATION

F.A.I. 94 (DAN RYAN EXPRESSWAY)

CTA STATION BARRIER WALL MODIFICATIONS
79TH, 87TH AND 95TH STREET STATIONS
TYPICAL SECTIONS & DETAILS

SCALE: NONE — DRAWN BY: MPG, SP

DATE: MARCH 7, 2006 — CHECKED BY: SP, PDF