F.A.I. RTE.	SECTION	COUNTY	TOTAL SHEETS	SHEET NO.
57	*	COOK	916	614
STA.		TO STA.		
FED. ROAD DIST. NO.	ILLINOIS	FED. AID PROJECT		

CONTRACT NO. 62304
*(1516.1, 1717, & 1818) R-4

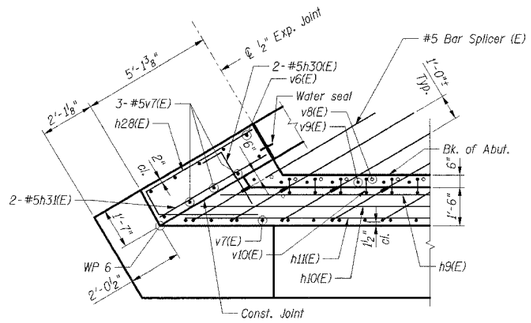

SECTION L-L

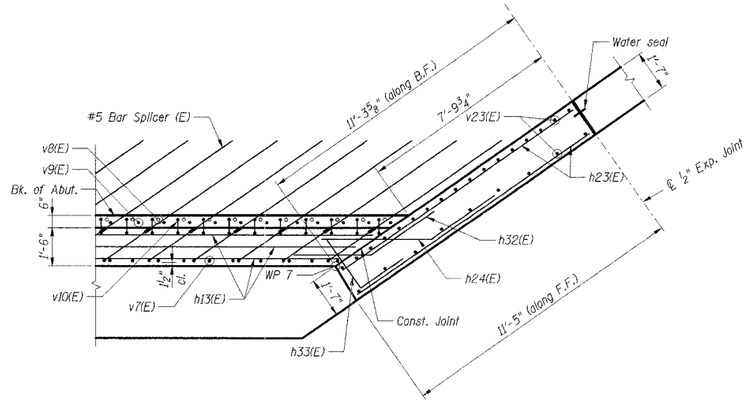

SECTION P-P

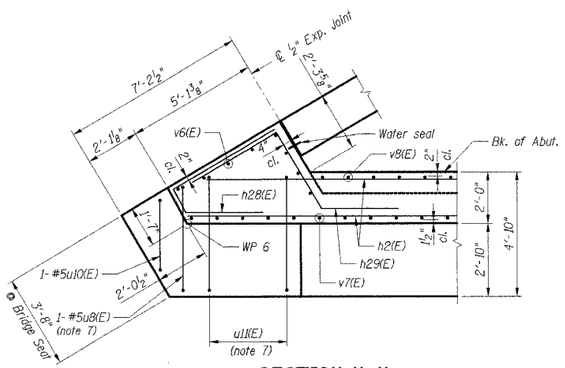

SECTION K-K

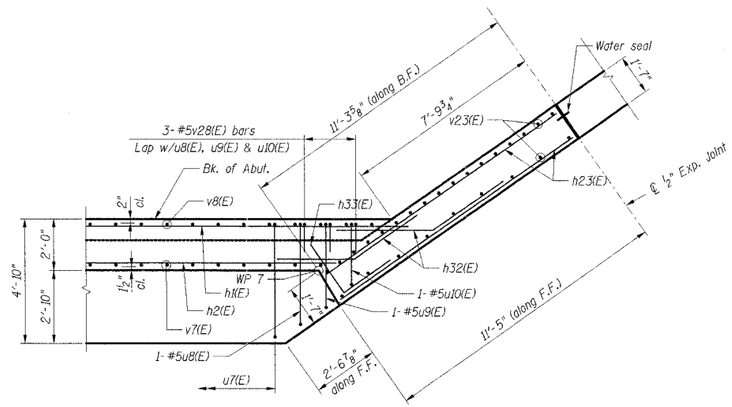

SECTION N-N

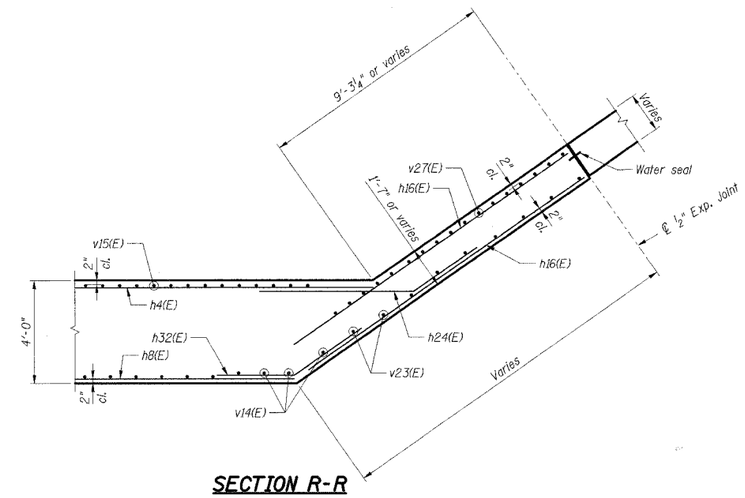

SECTION R-R

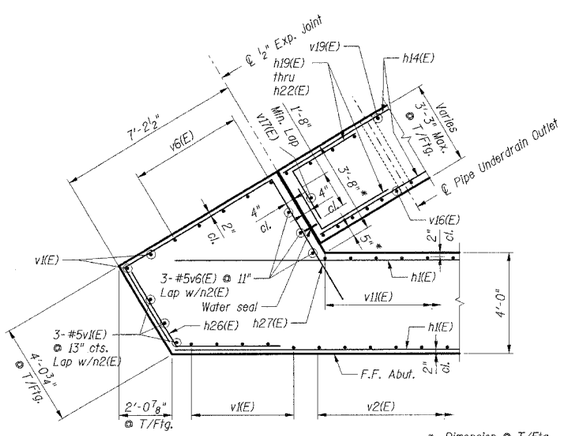

* Dimension @ T/Ftg.

SECTION J-J

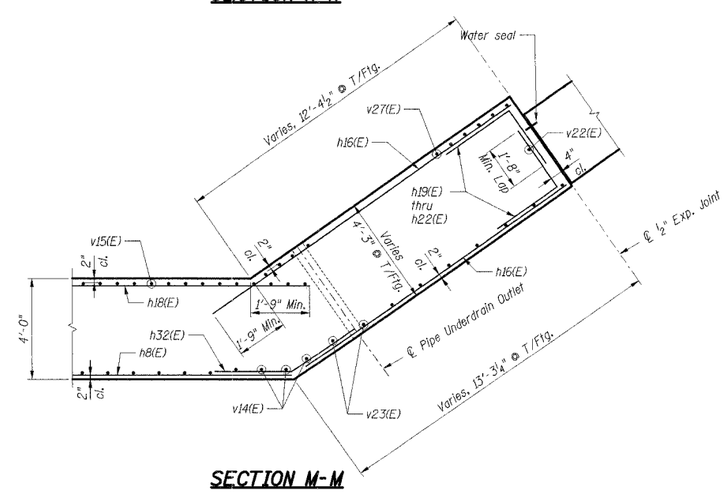

SECTION M-M

Notes:

1. Reinforcement bars designated (E) shall be epoxy coated.
2. Work this sheet with Shts. S-030 to S-039.
3. For Work Point, see Sht. S-030.
4. For Bar List & Bill of Materials, see Sht. S-039.
5. For typical wall details, see Sht.S-040.
6. B.F. denotes Back Face.
   F.F. denotes Front Face.
7. Space reinforcement to miss anchor bolts.

SHT. S-037

REVISIONS	
NAME	DATE

ILLINOIS DEPARTMENT OF TRANSPORTATION
F.A.I. ROUTE 57 (INTERSTATE 57)
I-57 NB OVER WB CONNECTOR
SN 016-0072 OLD, SN 016-2852 NEW
STA. 238+73.54
COOK COUNTY, SECTION (1516.1, 1717, & 1818) R-4

NORTH ABUTMENT DETAILS I

DATE: 03/07/06

DRAWN BY: FD
CHECKED BY: TCU

TENG

TENG & ASSOCIATES, INC.
ENGINEERS/ARCHITECTS/PLANNERS
205 N. MICHIGAN AVE., CHICAGO, IL 60601
TELEPHONE: 312.616.0000

\EKCOMP.DGN, \VXXQ0YT7.DGN, \SBLQ0YST.DGN, \ABTGOWEC.DGN, \BRBORDER.DGN, \VXXQ0YT7L.DGN, \ABTGOWEC.DGN, \VXXQ0YT7.DGN, \ABTGOWEC.DGN, \VXXQ0YT7.DGN, \ABTGOWEC.DGN, \VXXQ0YT7.DGN,
3-10-2006, 15:19:43 \\FS-D100-PROJ.CIV.DOT\DOCUMENTS\50860\STRUCTURE\ABTGOY19A.DGN UDETC