F.A.I. RTE.	SECTION	COUNTY	TOTAL SHEETS	SHEET NO.
57	*	COOK	764	514
STA.		TO STA.		
FED. ROAD DIST. NO. 1	ILLINOIS	FED. AID PROJECT		

CONTRACT NO. 62593
*SECTION (1516.1, 1717, & 1818) R-5

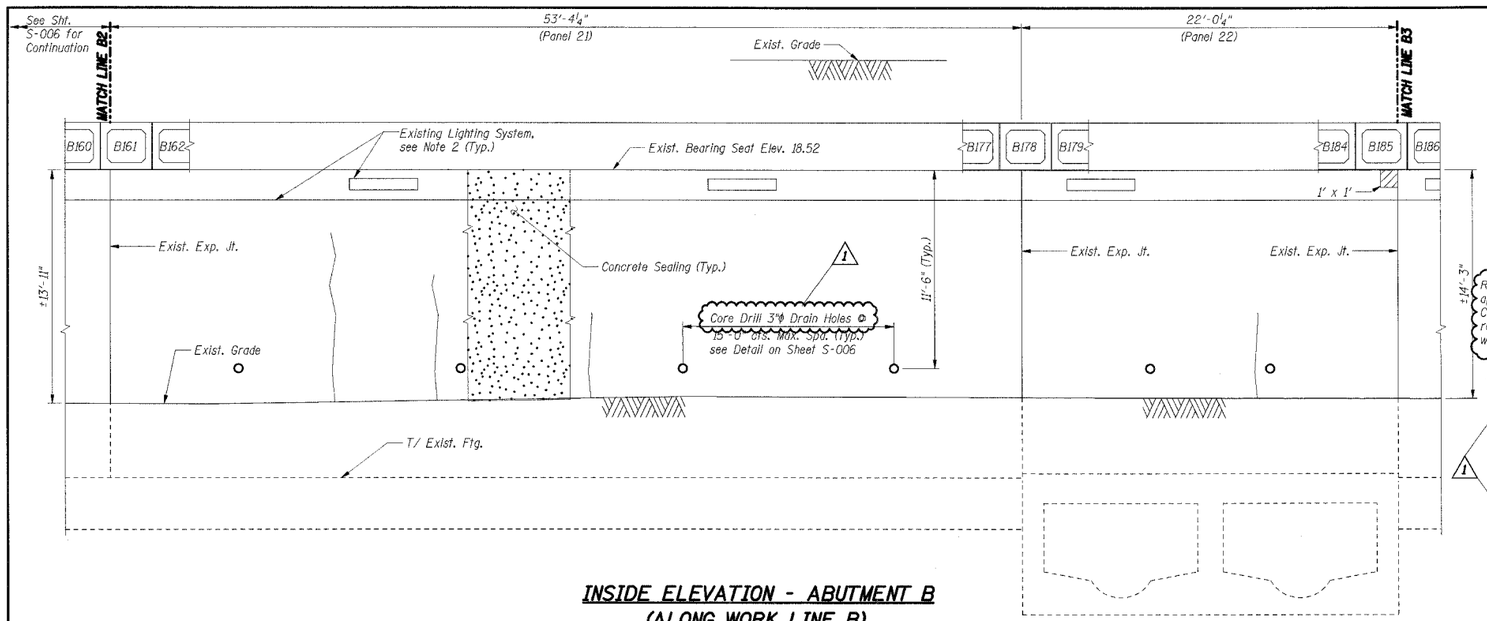

INSIDE ELEVATION - ABUTMENT B (ALONG WORK LINE B)

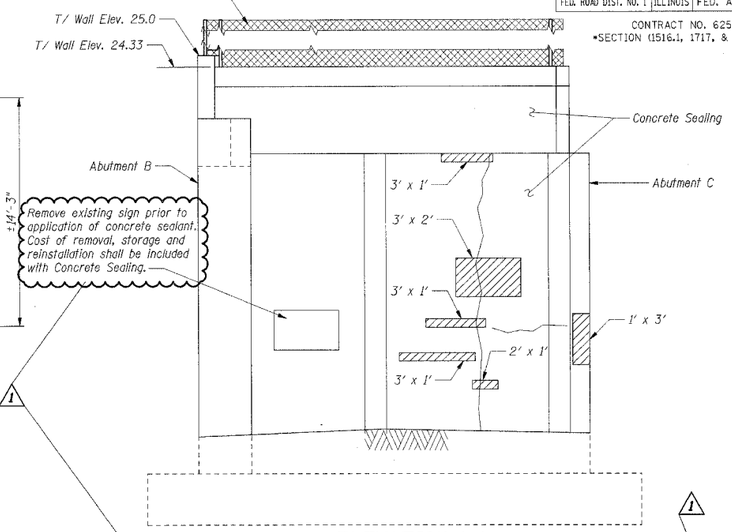

ELEVATION 1-1

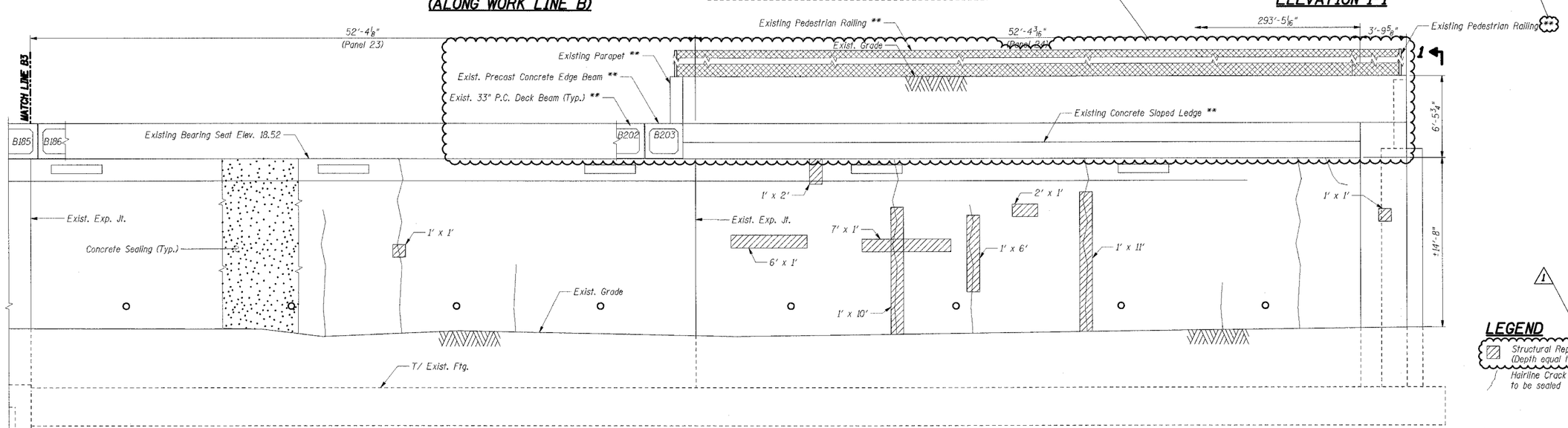

LEGEND

Structural Repair of Concrete (Depth equal to or less than 5")

Hairline Crack - Not to be sealed

Notes:

1. Work this Sheet with Sheet S-006.
2. Existing Tunnel Lighting System shall be protected and maintained by the Contractor per the Special Provision for PROTECT AND MAINTAIN EXISTING CTA TUNNEL LIGHTING SYSTEM.
3. Concrete Sealer shall be applied to the abutment walls according to the Special Provision for Concrete Sealer.
4. Areas of repairs shown are estimated based upon inspection surveys conducted in 2004. The Engineer shall document actual locations and types of repairs on As-Built plans.
5. Date of Survey
   I-94 Tunnel: February 2004
   CTA Tunnel: July 2004
6. The Contractor shall coordinate work on C.T.A. property with the C.T.A. according to the Special Provisions.
8. Repairs to the tunnel walls and sealing of C.T.A. tunnel walls shall not be performed until waterproofing membrane installation has been completed by others.
9. ** denotes existing elements constructed by others prior to abutment wall repair.

INSIDE ELEVATION - ABUTMENT B (ALONG WORK LINE B)

ABUTMENT B BILL OF MATERIAL

Item	Unit	Total
Structural Repair Of Concrete (Depth Equal To Or Less Than 5")	Sq Ft	90
Concrete Sealing	Sq Yd	687
Cored Drain Holes	Each	18

SHT. S-007

REVISIONS	
NAME	DATE
ADDENDUM 1	05/08/06

ILLINOIS DEPARTMENT OF TRANSPORTATION
F.A.I. ROUTE 57 (INTERSTATE 57) OVER
F.A.I. ROUTE I-94 SB & CTA TRACKS-BRIDGE REPAIRS
SN 016-0073
COOK COUNTY
SECTION (1516.1, 1717, & 1818) R-5

ABUTMENT B
REPAIRS II

DATE: 05/08/06
DRAWN BY: VV
CHECKED BY: RDS

TENG
TENG & ASSOCIATES, INC.
ENGINEERS/ARCHITECTS/PLANNERS
205 N. MICHIGAN AVE., CHICAGO, IL 60601
TELEPHONE 312.616.0000

Revised - JFS 5/8/06

LEEAC

\\ABTOWMZ.DGN, \\ABTOWMZ.DGN, \\ABTOWMZ.DGN, \\BRBORDER.DGN, \\BRBORDER.DGN
5-07-2006, 11:34:44 T:\DOCUMENT\19309601\STRUCT\DGN\ABTOWN_Z.DGN