F.A.I. RTE.	SECTION	COUNTY	TOTAL SHEETS	SHEET NO.
94	•	COOK	764	345
STA. 98+60 (SB I-57) STA. 1126+91 (SB FORD)		TO STA. 1313+00 (SB RYAN)		
FED. ROAD DIST. NO.	ILLINOIS	FED. AID PROJECT		

• (1516.1, 1717, & 1818) R-5

62593

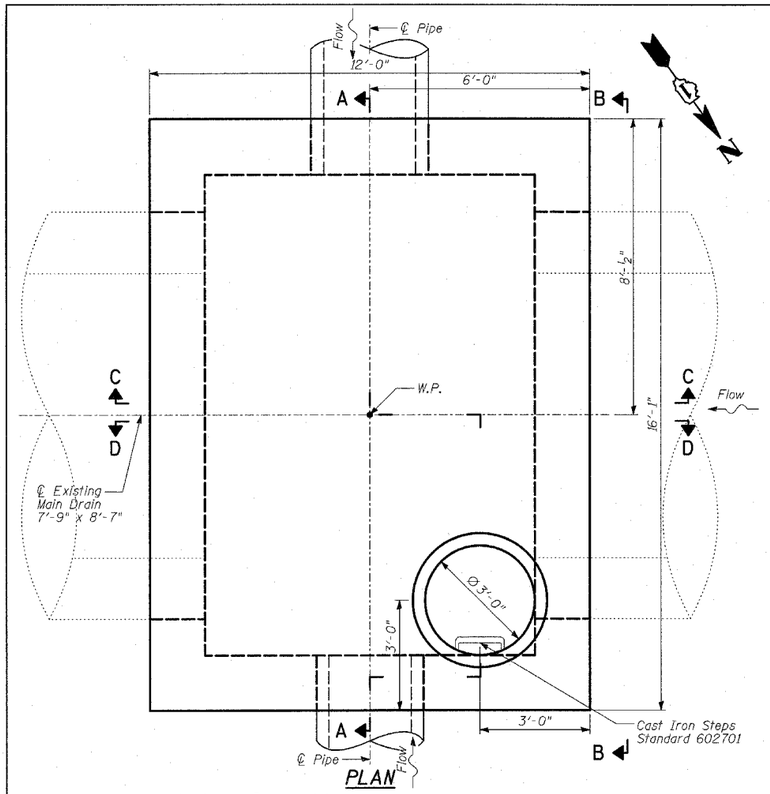

PLAN

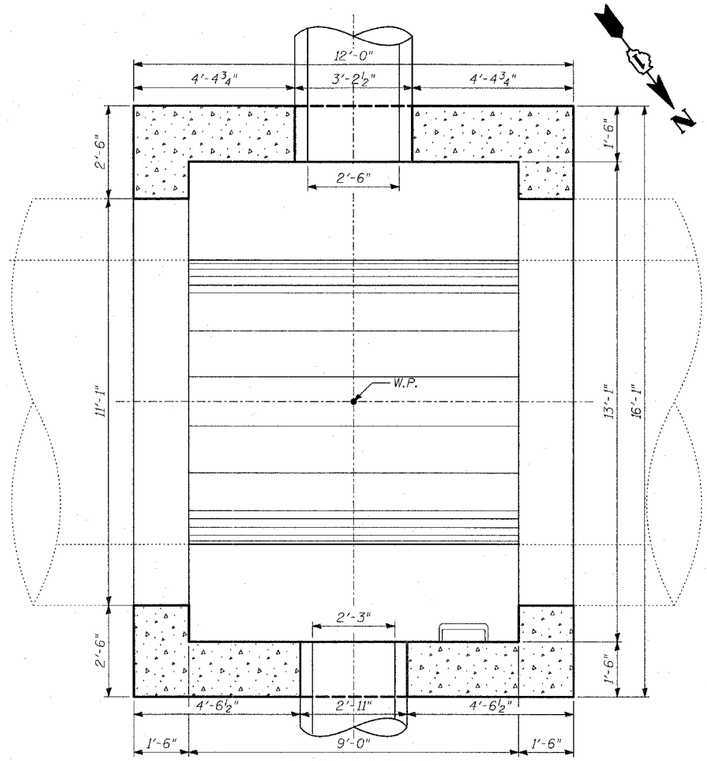

SECTIONAL PLAN

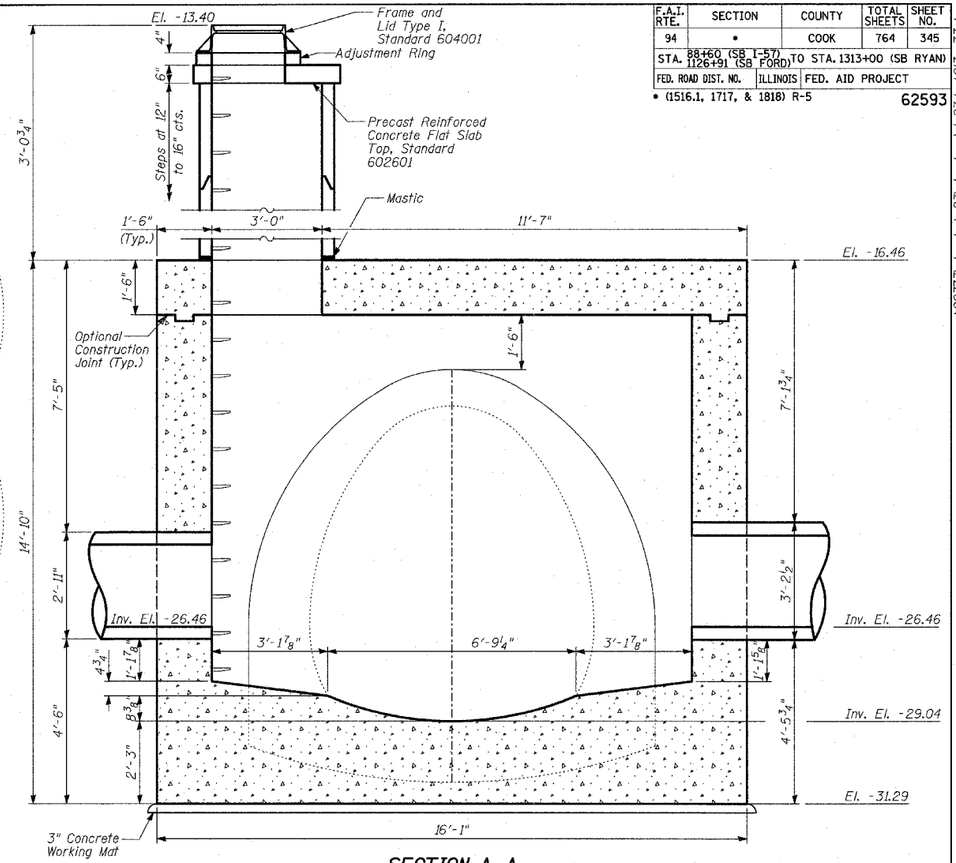

SECTION A-A

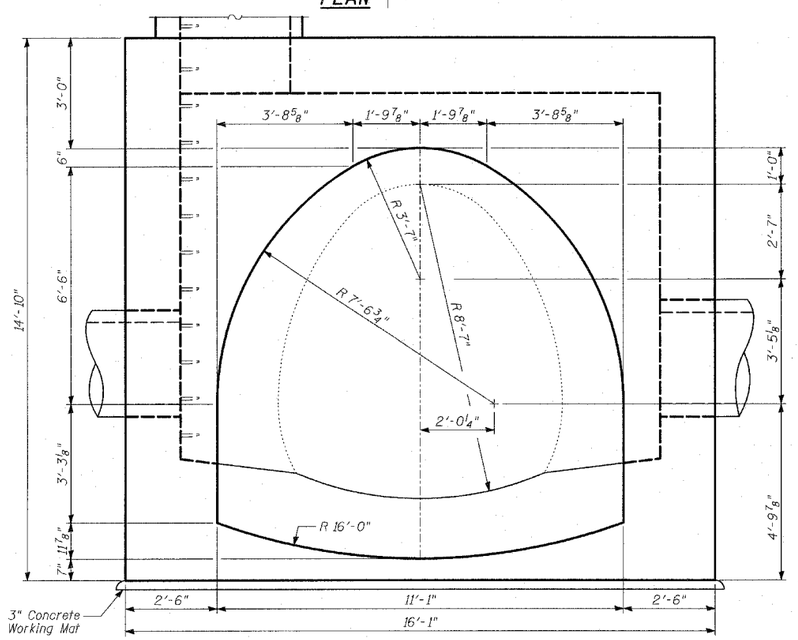

ELEVATION VIEW B-B

(Other Face Typical)

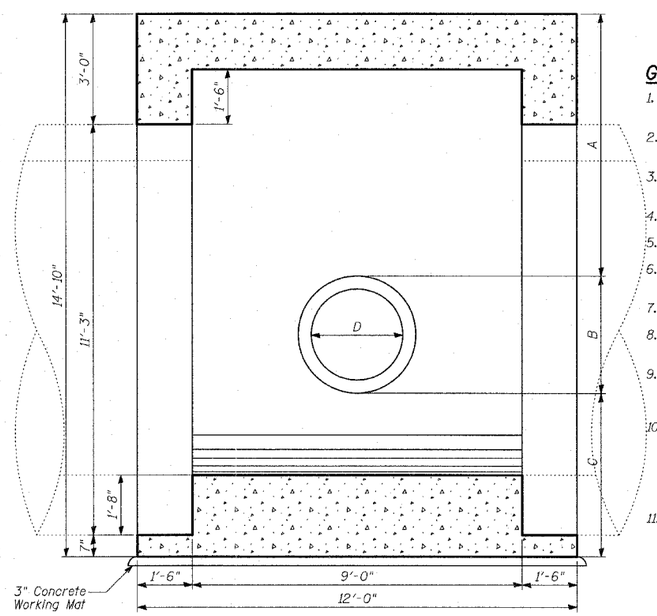

SECTION C-C & D-D

TABLE OF JUNCTION CHAMBER VARIABLES

Section	A	B	C	D
C-C	7'-1¾"	3'-2½"	4'-5¾"	2'-6"
D-D	7'-5"	2'-11"	4'-6"	2'-3"

GENERAL NOTES:

1. Alternate materials for the junction chamber top slab may be cast-in-place concrete or precast reinforced concrete.
2. The Contractor shall verify the location of the main drain before submitting the braced excavation drawings.
3. Excavation shall be performed simultaneously on each side of the existing Main Drain, followed by simultaneous backfilling around the junction chamber.
4. Retention systems placed within ten (10) feet of a water main must remain in place permanently.
5. All pipe openings are based on wall C ASTM C76, coordinate openings with pipe supplier.
6. All elevations shown are based on the Chicago City Datum of 0.00, which is 579.19 feet above mean tide New York. (NAVD 88)
7. Reinforcement bars shall conform to the requirements of AASHTO M31 or M322 Grade 60.
8. Cast iron steps shall be gray iron conforming to the requirements of Article 1006.14 of the Standard Specifications.
9. The maximum width of excavation is the width of the junction chamber plus 4 feet, and the maximum length is the length of the junction chamber plus 4 feet. Excavation outside the maximum dimensions specified will not be measured for payment.
10. Plan dimensions and details relative to existing structure have been taken from existing plans and are subject to nominal construction variations. It shall be the Contractor's responsibility to verify such dimensions and details in the field and make necessary approved adjustments prior to construction or ordering of materials. Such variations shall not be cause for additional compensation for a change in the scope of the work, however, the Contractor will be paid for the quantity actually furnished at the unit price for the work.
11. The design of the braced excavation is the responsibility of the Contractor. The Contractor shall submit drawings and design for the braced excavation to the Engineer for approval. The braced excavation design and drawings shall be signed and sealed by an Illinois Licensed Structural Engineer, submitted and approved prior to the start of any work. The Engineer's approval shall not relieve the Contractor from the sole responsibility of the structural integrity of the braced excavation system.
12. See Standard 602701 for details of cast iron steps.
13. For additional information, see Standard Specifications.
14. For reinforcement details, see Sheets 2 and 3 of 3.
15. For additional details, see Drainage Schedules.

STATE OF ILLINOIS — PHILLIP D. FREY — 081-004826 — CHICAGO, ILLINOIS — LICENSED STRUCTURAL ENGINEER

Signed Phillip D. Frey
Phillip D. Frey, S.E. IL Lic. No. 081-004826
Expires 11-30-2006.
Date 3/1/06

For drawings 1 thru 3

TOTAL BILL OF MATERIAL

ITEM	UNIT	TOTAL
Porous Granular Embankment	CU YD	106
Junction Chamber No. 73	EACH	1
Braced Excavation	CU YD	213

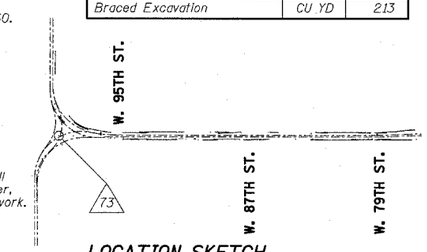

LOCATION SKETCH

SHEET 1 OF 3

REVISIONS	
NAME	DATE

ILLINOIS DEPARTMENT OF TRANSPORTATION

F.A.I. 94 (DAN RYAN EXPRESSWAY)

JUNCTION CHAMBER 73
GENERAL PLAN AND ELEVATION
STA. 1157+72.53 OFFSET 49.78 LT.

S.N.
SCALE:
DATE: MARCH 1, 2006

DESIGNED BY: TD, DE
DRAWN BY: DE
CHECKED BY: MI, TD

TY·LIN INTERNATIONAL