CONTRACT NO. 60828

F.A.P RTE.	SECTION	COUNTY	TOTAL SHEETS	SHEET NO.
90/94	1999-161-1	COOK	75	18
STA.		TO STA.		
FED. ROAD DIST. NO.	ILLINOIS	FED. AID PROJECT		

D-91-411-99

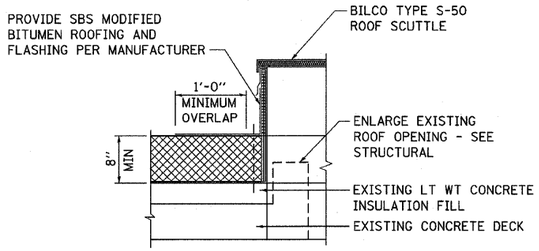

1/A-4 DETAIL AT NEW ROOF HATCH
SCALE: 1" = 1'-0"

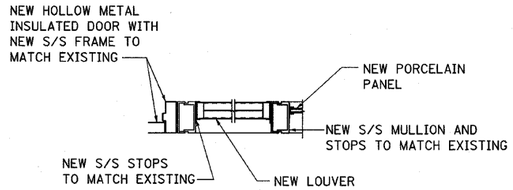

10/A-4 LOUVER DETAIL
SCALE: 1" = 1'-0"
HEAD DETAIL SIMILAR

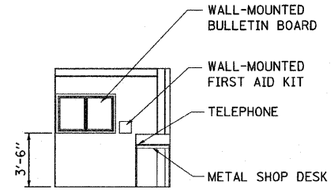

11/A-4 INTERIOR ELEVATION
NO SCALE

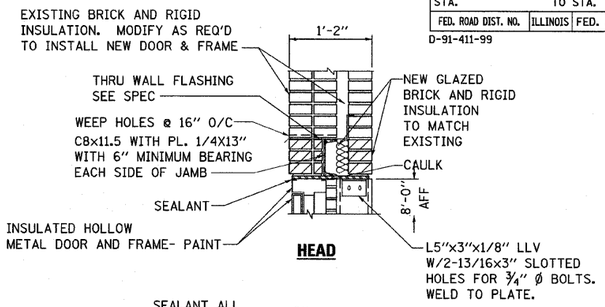

HEAD

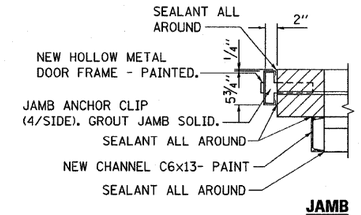

JAMB

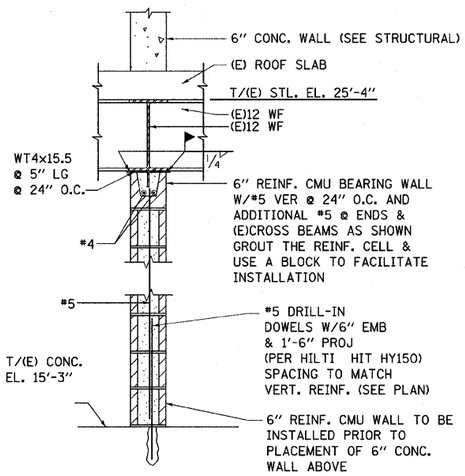

4/A-4 DETAIL
SCALE: 1" = 1'-0"

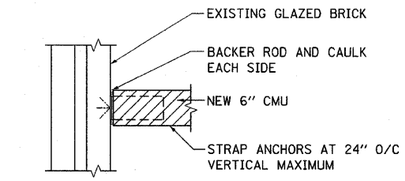

2/A-4 WALL INTERSECTION DETAIL
SCALE: 1" = 1'-0"

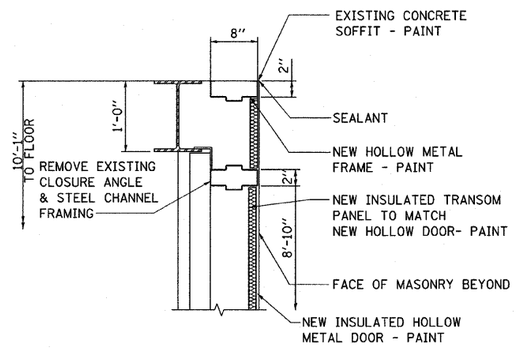

3/A-4 TRANSOM DETAIL
SCALE: 1" = 1'-0"

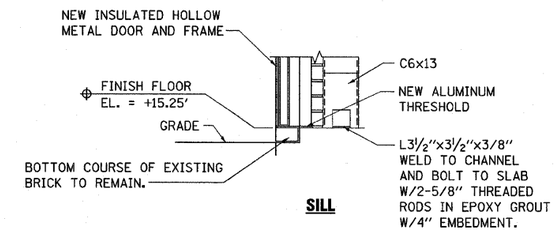

SILL

7/A-4 DOOR DETAILS
SCALE: 1" = 1'-0"

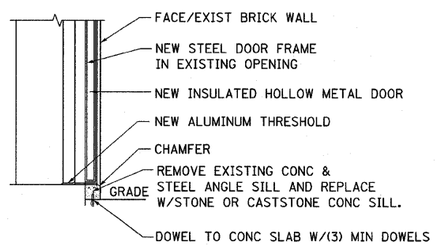

5/A-4 SILL DETAIL
SCALE: 1" = 1'-0"

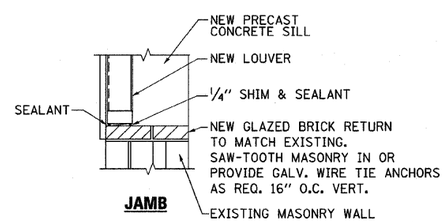

JAMB

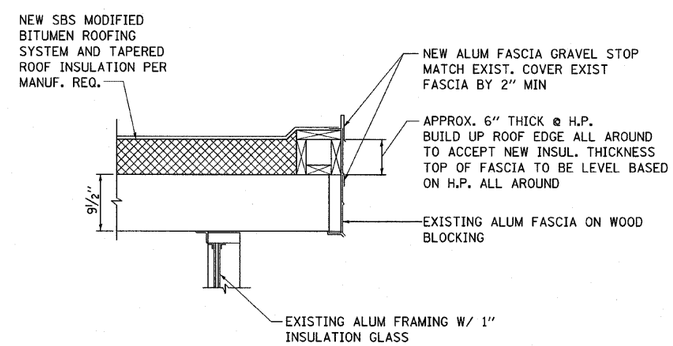

12/A-4 ROOF EDGE DETAIL
SCALE: 1" = 1'-0"

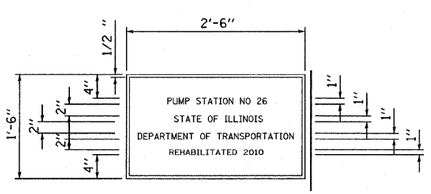

8/A-4 IDENTIFICATION PLATE
SCALE: 1" = 1'-0"

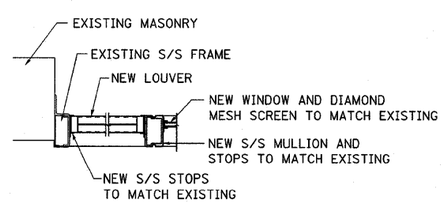

9/A-4 LOUVER DETAIL
SCALE: 1" = 1'-0"
HEAD DETAIL SIMILAR

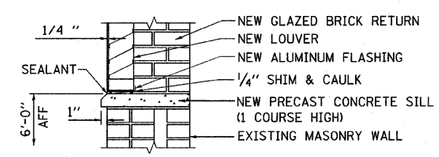

SILL

NOTE: SEE DETAIL 7/A4 FOR SIMILAR HEAD CONDITION

6/A-4 LOUVER DETAILS
SCALE: 1" = 1'-0"

0 .5 1 2 — 1" = 1'-0"

Stanley Consultants INC.
8521 West Higgins Road, Suite 730, Chicago, Illinois 60631-2801
www.stanleygroup.com
Illinois Firm Registration No.: 184-000533

REVISIONS	
NAME	DATE

ILLINOIS DEPARTMENT OF TRANSPORTATION

ARCHITECTURAL SECTIONS & DETAILS

SCALE: VERT. HORIZ. AS NOTED
DATE: 3/23/2010
DRAWN BY: A.T.
CHECKED BY: D.L.

PLOT DATE = 3/22/2010
FILE NAME = D:\60828-A1-A-04.dgn
PLOT SCALE = 48.9999998
USER NAME = $USER$