CONTRACT NO. 60828

F.A.P RTE.	SECTION	COUNTY	TOTAL SHEETS	SHEET NO.
90/94	1999-161-1	COOK	75	43
STA.		TO STA.		
FED. ROAD DIST. NO.	ILLINOIS	FED. AID PROJECT		

D-91-411-99

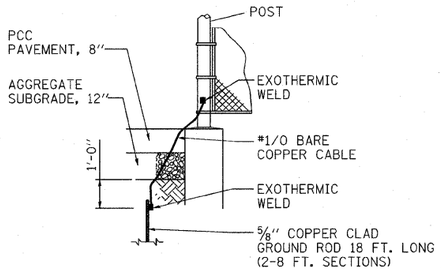

DETAIL A

FENCE POST GROUNDING

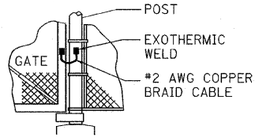

DETAIL C

FENCE GATE GROUNDING JUMPER

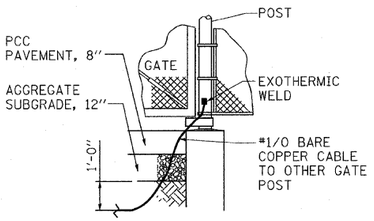

DETAIL B

FENCE GATE POST OPENING GROUNDING JUMPER

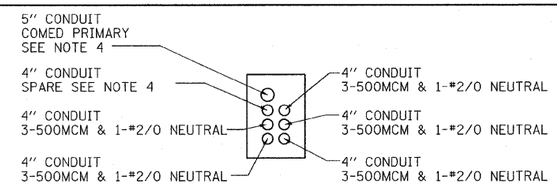

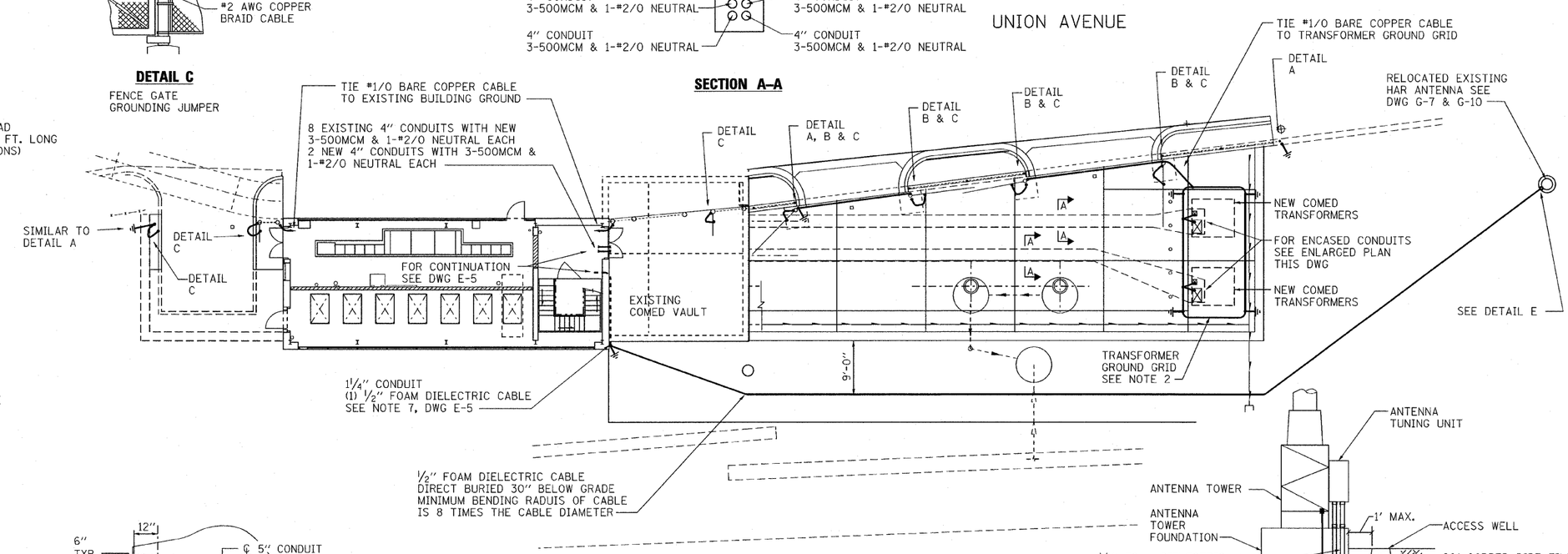

SECTION A–A

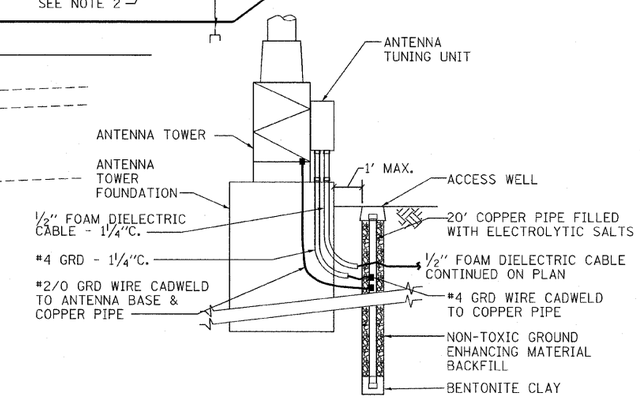

DETAIL E

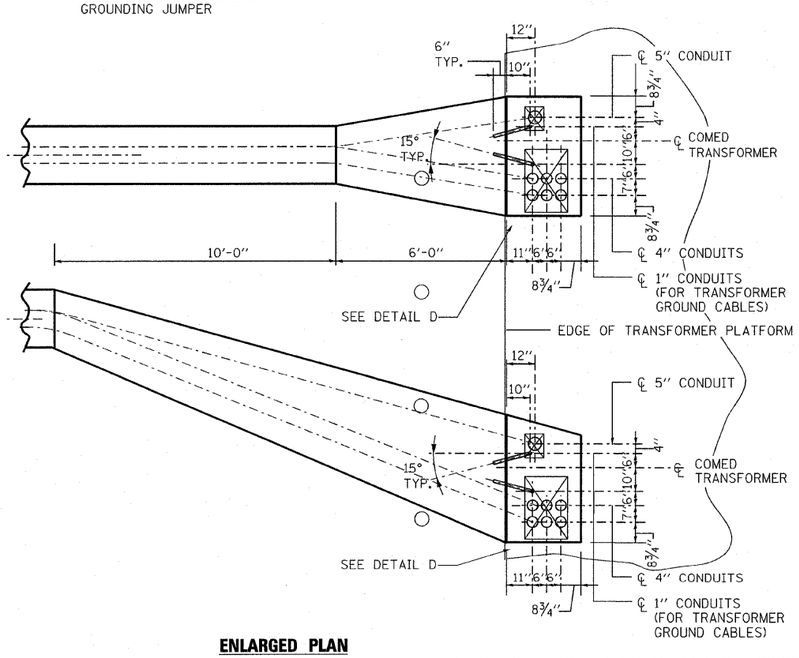

ENLARGED PLAN

ENCASED CONDUITS AT COMED TRANSFORMERS WORK WITH DWGS G-7, G-8 & G-9

PUMP STATION TRUCK LOT AND TRANSFORMER PAD WORK (MECHANICALLY STABILIZED EARTH RETAINING WALL CONSTRUCTION) WILL BE PERFORMED AS A SEPARATE CONTRACT.

THE CONTRACTOR SHALL COORDINATE HIS/HER WORK WITH THE PUMP STATION TRUCK LOT AND TRANSFORMER PAD CONTRACTOR IN ACCORDANCE WITH ARTICLE 105.08 OF THE STANDARD SPECIFICATIONS AND AS DIRECTED BY THE ENGINEER.

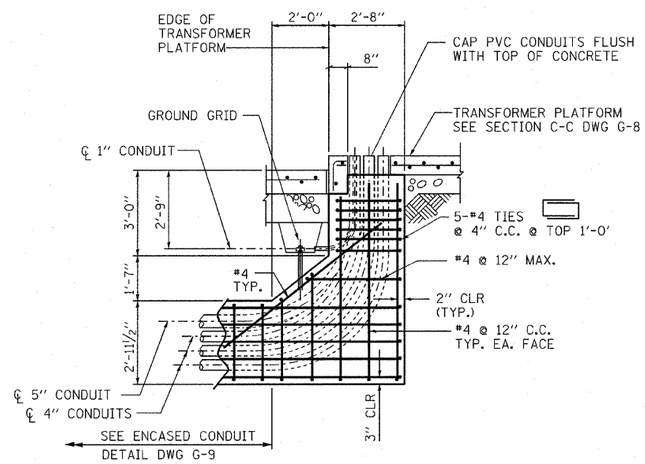

DETAIL D

ENCASED CONDUITS TERMINATION STRUCTURE

NOTE:

4" & 5" CONDUIT ELBOWS TO BE 48" RADUIS & 1" CONDUIT ELBOWS TO BE 12" RADUIS

NOTES:

1. FOR ADDITIONAL UNDERGROUND DUCTS DETAILS SEE DWGS G-7, G-8 & G-9.
2. GROUND GRID AND RODS AROUND TRANSFORMERS TO BE FURNISHED BY COMED AND INSTALLED BY CONTRACTOR PER COMED SPECIFICATION C5286.
3. EXISTING CONCRETE WALLS SHALL BE CORE DRILLED FOR NEW CONDUITS. ALL CONDUITS SHALL ENTER COMED VAULT PER COMED SPECIFICATION C4250. ALL CONDUIT PENETRATIONS BETWEEN HAZARDOUS AND NON-HAZARDOUS AREAS SHALL BE GROUTED GAS TIGHT.
4. CONTRACTOR TO INSTALL A #8 GALVANIZED PULL WIRE IN THE 5" UNDERGROUND CONDUITS DESIGNATED "COMED PRIMARY" AND THE 4" UNDERGROUND CONDUITS DESIGNATED "SPARE".

REVISIONS	
NAME	DATE

Stanley Consultants INC.
850 West Higgins Road, Suite 730, Chicago, Illinois 60631-2801
www.stanleygroup.com
Illinois Firm Registration No. 184-000633

ILLINOIS DEPARTMENT OF TRANSPORTATION

ELECTRICAL SITE PLAN & DETAILS

SCALE: VERT. NO SCALE HORIZ.
DATE: 3/23/2010
DRAWN BY: B.K.
CHECKED BY: M.Z.

PLOT DATE = 3/22/2010
FILE NAME = 0160828-sh-t-E-02.dgn
PLOT SCALE = 1:1
USER NAME = #USER#