STATE OF ILLINOIS
DEPARTMENT OF TRANSPORTATION

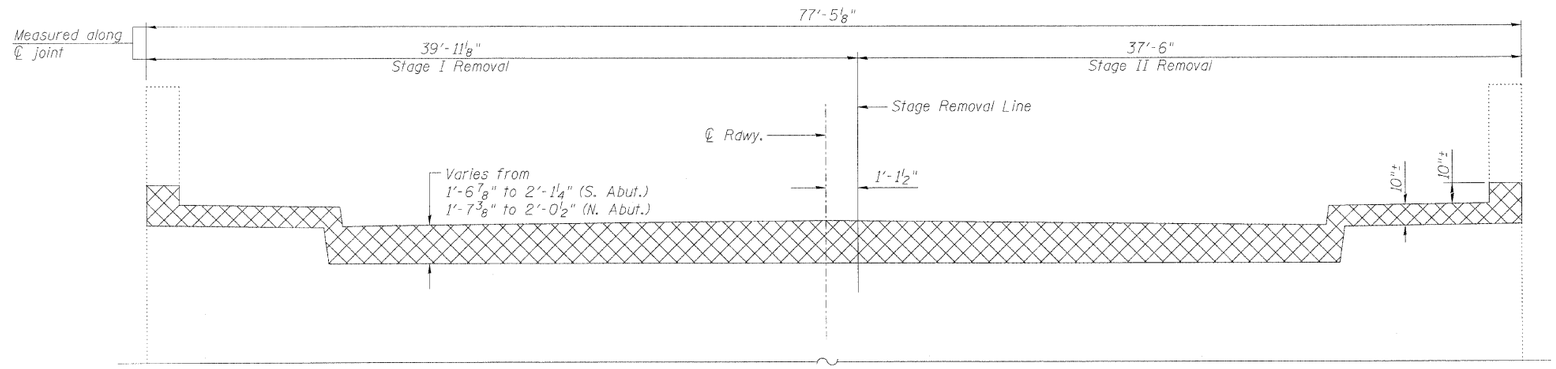

SECTION B-B
(Dimensions at Rt. L's)

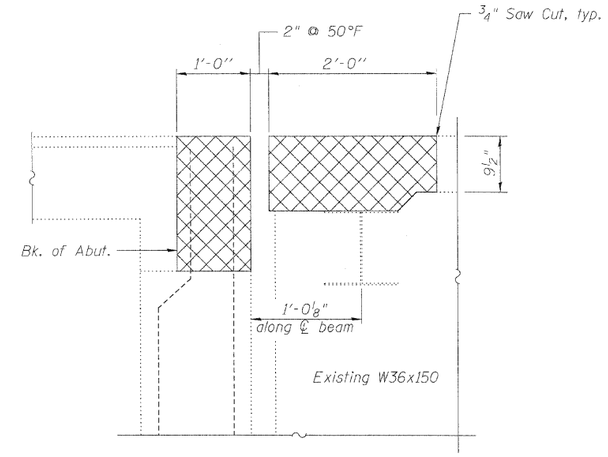

SECTION A-A
(Dimensions @ Rt. L's unless otherwise noted)

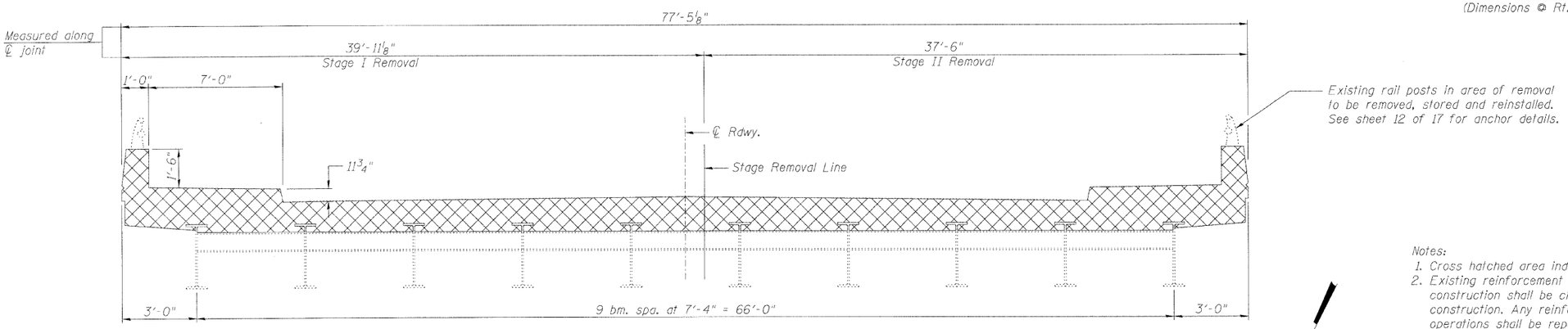

SECTION C-C
(Dimensions at Rt. L's)

Notes:
1. Cross hatched area indicates concrete removal.
2. Existing reinforcement bars in the concrete removal area extending in new construction shall be cleaned, straigthened, and incorporated into the new construction. Any reinforcement bars that are damaged during concrete removal operations shall be repaired or replaced using an approved bar splicer or anchorage system. Cost included in Concrete Removal.
3. Overlay removal is included in pay item Concrete Removal.

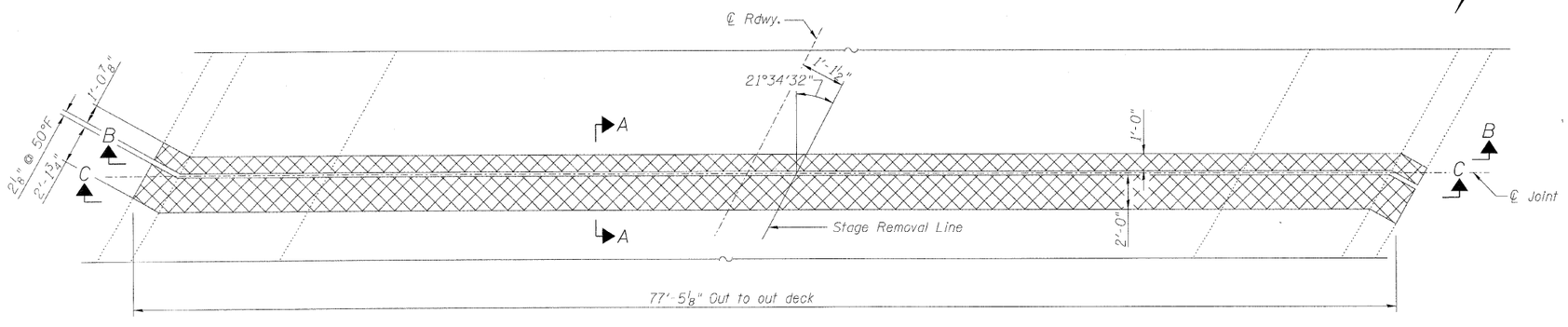

PLAN
(South Abut. shown, North Abut. similar)

BILL OF MATERIAL

Item	Unit	Total
Concrete Removal	Cu. Yd.	24.5

EXPANSION JOINT CONCRETE REMOVAL
AT ABUTMENTS
STRUCTURE NO. 016-0315

LIN ENGINEERING, LTD.
Consulting Engineers
Chatham, Illinois

Designed By: ESH | Checked By: MTH | Drawn By: ESH
Date: March, 2010 | File: 016-0315.dgn

SHEET NO. 5
17 SHEETS

F.A.P. RTE.	SECTION	COUNTY	TOTAL SHEETS	SHEET NO.
348	(0708.1&2323.5)B	COOK	47	16
		CONTRACT NO. 60D69		
		ILLINOIS FED. AID PROJECT		