6-11-10 LETTING ITEM 207

F.A.S.U RTE.	SECTION	COUNTY	TOTAL SHEETS	SHEET NO.
*	21RS-4, 22RS-5	LOGAN	31	1
	ILLINOIS	CONTRACT NO. 72A44		

* FAS 1773/ FAU 7706

STATE OF ILLINOIS
DEPARTMENT OF TRANSPORTATION
DIVISION OF HIGHWAYS

PROPOSED
HIGHWAY PLANS

FAS ROUTE 1773 (BL-55) & FAU ROUTE 7706 (OLD US 66)
SECTION 21RS-4, 22RS-5

LOGAN COUNTY

C-96-137-10

INDEX OF SHEETS

1	COVER SHEET
2	GENERAL NOTES
3	SUMMARY OF QUANTITIES
4-9	SCHEDULE OF QUANTITIES
10-12	TYPICAL SECTIONS
13-29	PLAN SHEETS
30-31	DETAIL SHEETS

TRAFFIC

ADT 5138 (2006)
%SU = 10.0 (2006)
%MU = 4.0 (2006)

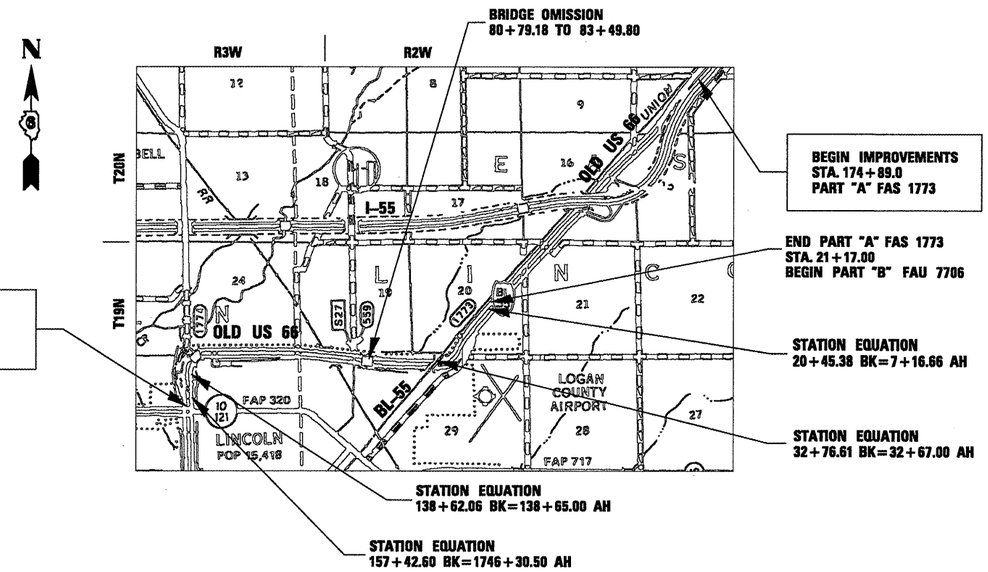

D-96-520-06

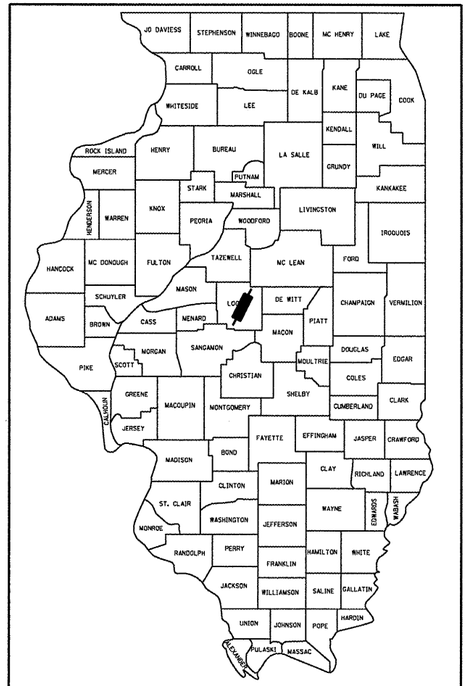

LOCATION OF SECTION INDICATED THUS:- ▬

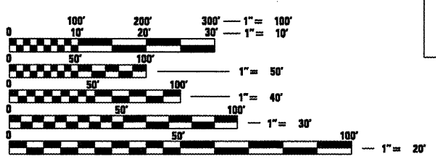

FULL SIZE PLANS HAVE BEEN PREPARED USING STANDARD ENGINEERING SCALES. REDUCED SIZED PLANS WILL NOT CONFORM TO STANDARD SCALES. IN MAKING MEASUREMENTS ON REDUCED PLANS, THE ABOVE SCALES MAY BE USED.

J.U.L.I.E.
JOINT UTILITY LOCATION INFORMATION FOR EXCAVATION
1-800-892-0123
OR 811

GROSS LENGTH = 31,655.03 FT. = 5.99 MILE
NET LENGTH = 31,384.41FT. = 5.94 MILE

STATE OF ILLINOIS
DEPARTMENT OF TRANSPORTATION
DIVISION OF HIGHWAYS

SUBMITTED April 8 20 10
Roger Z. Ainsley
DEPUTY DIRECTOR OF HIGHWAYS, REGION ENGINEER

May 7 20 10
Scott E. Stitt, P.E. /ka
acting ENGINEER OF DESIGN AND ENVIRONMENT

May 7 20 10
Christine M. Reed /ka
DIRECTOR OF HIGHWAYS, CHIEF ENGINEER

PROJECT ENGINEER : JOHN NEGANGARD
PROJECT MANAGER : VICTOR YOUNG

CONTRACT NO. 72A44

PRINTED BY THE AUTHORITY OF THE STATE OF ILLINOIS

GENERAL NOTES:

1 ALL ELEVATIONS SHOWN IN THE PLANS ARE U. S. G. S. MEAN SEA LEVEL DATUM.

2 ANY REFERENCE TO THE STANDARDS THROUGHOUT THE PLANS SHALL BE INTERPRETED TO BE THE LATEST STANDARDS OF THE DEPARTMENT AS INCLUDED IN THE PLANS.

3 THE LOCATION OF THOSE BURIED AND ABOVE GROUND UTILITIES SHOWN ARE APPROXIMATE. THE CONTRACTOR SHALL BE RESPONSIBLE FOR PROTECTING UTILITY PROPERTY FROM CONSTRUCTION OPERATIONS AS OUTLINED IN ARTICLE 107. 26 OF THE STANDARD SPECIFICATIONS. THE J. U. L. I. E. NUMBER IS (800) 892-0123. A MINIMUM OF 48 HOURS ADVANCE NOTICE IS REQUIRED, SEE SPECIAL PROVISIONS FOR STATUS OF UTILITIES, WITH UTILITY COMPANIES LISTED.

4 THE EXISTING ROAD SIGNS THAT INTERFERE WITH CONSTRUCTION SHALL BE RELOCATED AS DIRECTED BY THE ENGINEER. AFTER THE CONSTRUCTION IS COMPLETE, THE CONTRACTOR SHALL REPLACE THE SIGNS AS DIRECTED BY THE ENGINEER. THIS WORK WILL NOT BE PAID FOR SEPARATELY, BUT CONSIDERED INCLUDED IN THE CONTRACT UNIT BID PRICES.

5 ABANDONED UNDERGROUND UTILITIES THAT CONFLICT WITH THE CONSTRUCTION SHALL BE DISPOSED OF OUTSIDE THE LIMITS OF RIGHT-OF-WAY ACCORDING TO ARTICLE 202. 03 OF THE STANDARD SPECIFICATIONS AND AS DIRECTED BY THE ENGINEER. THIS WORK WILL NOT BE PAID FOR SEPARATELY BUT SHALL BE CONSIDERED INCLUDED IN THE CONTRACT UNIT BID PRICE FOR EARTH EXCAVATION. NO ADDITIONAL COMPENSATION WILL BE ALLOWED.

6 THE FOLLOWING APPLICATION RATES WERE USED FOR QUANTITY CALCULATIONS:

LEVELING BINDER	0. 056 TON/SQ YD •in
BIT. CONC. SURF. CSE	0. 056 TON/SQ YD •in
AGG. SHLDS./BASE CSE.	2. 05 TON/CU.YD
BIT. MATLS. (PR COAT)	0. 00038 TON/SQ YD
AGG. (PR COAT)	0. 001425 TON/SQ YD

7 ACCESS TO ALL PROPERTIES SHALL BE MAINTAINED DURING CONSTRUCTION ACTIVITIES. WHEN UNAVOIDABLE, REASONABLE PARKING SHALL BE PROVIDED FOR THOSE PROPERTIES WHICH ARE TEMPORARILY UNACCESSIBLE.

8 THE CONTRACTOR SHALL BE RESPONSIBLE FOR CONTACTING THE DISTRICT 6 OPERATIONS 14 DAYS IN ADVANCE OF ANY WORK TO VERIFY THE LOCATION OF ANY PASSING ZONES.

STANDARDS:

000001-05
442201-03
630001-08
635006-03
635011-02 704421-02
701001-02 701422-02
701006-03
701011-02
701901-01
780001-02
781001-03

COMMITMENTS

COMMITMENTS ARE NOT TO BE ALTERED WITHOUT THE WRITTEN APPROVAL OF ALL PARTIES TO WHICH THE COMMENTS WERE MADE.

1. THE RESIDENT ENGINEER SHALL CONTACT STUDIES AND PLANS CONCERNING ANY MAJOR PLAN CHANGES.
2. INFORMATIONAL LETTER WITH THE CITY OF LINCOLN
3. RAILROAD LIABILTY INSURANCE SHALL BE OBTAINED BY THE CONTRACTOR.

THE FOLLOWING MIXTURE REQUIREMENTS ARE APPLICABLE:

MIXTURE USE(S):	HMA SURFACE	LEVELING BINDER	INCIDENTAL HMA SURFACING	HMA SHOULDERS	HMA PATCHING
PG	PG 64-22	PG 64-22	PG 64-22	PG 58-22	PG 64-22
DESIGN AIR VOIDS	4. 0% @ N70	4. 0% @ N70	4. 0% @ N50	2. 0% @ N30	4. 0% @ N70
MIXTURE COMPOSITION (GRADATION MIXTURE)	IL 9. 5 OR 12. 5	IL 9. 5	IL 9. 5 OR 12. 5	BAM (OTHER)	IL 19. 0
FRICTION AGGREGATE	MIX D	N/A	MIX C	N/A	N/A

Route _____
Section _____
County _____

DISTRICT SIX

EXAMINED MARCH 30 20 10

OPERATIONS ENGINEER

EXAMINED MARCH 26 20 10

PROGRAM IMPLEMENTATION ENGINEER

EXAMINED April 9 20 10

PROGRAM DEVELOPMENT ENGINEER

• FAS 1773/ FAU 7706

FILE NAME = c:\pw_work\pwidot\vereenda\d0151693\D672A44-sht-gennote.dgn	USER NAME = vereenda	DESIGNED -	REVISED -
		DRAWN -	REVISED -
	PLOT SCALE = 100.0000 ' / IN.	CHECKED -	REVISED -
	PLOT DATE = Apr-08-2010 05:37:01PM	DATE -	REVISED -

STATE OF ILLINOIS
DEPARTMENT OF TRANSPORTATION

GENERAL NOTES

SCALE: | SHEET NO. OF SHEETS | STA. TO STA.

F.A. RTE.	SECTION	COUNTY	TOTAL SHEETS	SHEET NO.
•	21RS-4,22RS-5	LOGAN	31	2

CONTRACT NO. 72A44

ILLINOIS FED. AID PROJECT

ILLINOIS DEPARTMENT OF TRANSPORTATION
SUMMARY OF QUANTITIES

CODE NO.	ITEM	UNIT	TOTAL 100% STATE	FAS 1773 (BL 55) I000 100% STATE	FAU 7706 (OLD 66) I000 100% STATE
40200800	AGGREGATE SURFACE COURSE, TYPE B	TON	4.5	0.0	4.5
40600200	BITUMINOUS MATERIALS (PRIME COAT)	TON	152.8	72.7	80.1
40600300	AGGREGATE (PRIME COAT)	TON	378.3	179.8	198.5
40600635	LEVELING BINDER (MACHINE METHOD), N70	TON	7362.3	3608.8	3753.5
40600895	CONSTRUCTING TEST STRIP	EACH	1.0	0.5	0.5
40600982	HOT-MIX ASPHALT SURFACE REMOVAL - BUTT JOINT	SQ YD	10105.4	3840.1	6265.3
40600990	TEMPORARY RAMP	SQ YD	497.8	135.0	362.8
40603340	HOT-MIX ASPHALT SURFACE COURSE, MIX "D", N70	TON	14724.6	7217.5	7507.1
40800050	INCIDENTAL HOT-MIX ASPHALT SURFACING	TON	1710.4	526.0	1184.4
44000158	HOT-MIX ASPHALT SURFACE REMOVAL, 2 1/4"	SQ YD	115169.7	6892.6	108277.1
44000198	HOT-MIX ASPHALT SURFACE REMOVAL, VARIABLE DEPTH	SQ YD	94406.7	94406.7	0.0
44201815	CLASS D PATCHES, TYPE II, 14 INCH	SQ YD	1462.0	731.0	731.0
44201819	CLASS D PATCHES, TYPE III, 14 INCH	SQ YD	64.0	32.0	32.0
48101200	AGGREGATE SHOULDERS, TYPE B	TON	2348.1	1734.1	614.0
48203100	HOT-MIX ASPHALT SHOULDERS	TON	4732.5	1945.1	2787.5
67000400	ENGINEER'S FIELD OFFICE, TYPE A	CAL MO	12.0	6.0	6.0
67100100	MOBILIZATION	LSUM	1.0	0.5	0.5
70100309	TRAFFIC CONTROL AND PROTECTION, STANDARD 701421	LSUM	1.0	0.5	0.5
70100320	TRAFFIC CONTROL AND PROTECTION, STANDARD 701422	LSUM	1.0	0.5	0.5
70300100	SHORT-TERM PAVEMENT MARKING	FOOT	18420.0	8772.0	9648.0
70300210	TEMPORARY PAVEMENT MARKING - LETTERS & SYMBOLS	SQ FT	664.0	172.0	492.0
70300230	TEMPORARY PAVEMENT MARKING - LINE 5"	FOOT	144441.0	68676.0	75765.0
70300240	TEMPORARY PAVEMENT MARKING - LINE 6"	FOOT	3571.0	1578.0	1993.0
70300250	TEMPORARY PAVEMENT MARKING - LINE 8"	FOOT	2860.0	1255.0	1605.0
70300260	TEMPORARY PAVEMENT MARKING - LINE 12"	FOOT	495.0	252.0	243.0
70300280	TEMPORARY PAVEMENT MARKING - LINE 24"	FOOT	130.0	26.0	104.0
70301000	WORK ZONE PAVEMENT MARKING REMOVAL	SQ FT	2047.0	975.0	1072.0
78004220	PREFORMED PLASTC PAVEMENT MARKING, TYPE B -INLAID- LINE 5"	FOOT	15350.0	7310.0	8040.0
78004240	PREFORMED PLASTC PAVEMENT MARKING, TYPE B -INLAID- LINE 8"	FOOT	2860.0	1255.0	1605.0
78004250	PREFORMED PLASTIC PAVEMENT MARKING, TYPE B-INLAID-LINE 12'	FOOT	495.0	252.0	243.0
78004280	PREFORMED PLASTC PAVEMENT MARKING, TYPE B -INLAID- LINE 24"	FOOT	130.0	26.0	104.0
78004200	PREFORMED PLASTC PAVEMENT MARKING, TYPE B -INLAID- LETTERS AND SYMBOLS	SQ FT	664.0	172.0	492.0
78100100	RAISED REFLECTIVE PAVEMENT MARKER	EACH	996.0	472.0	524.0
78300200	RAISED REFLECTIVE PAVEMENT MARKER REMOVAL	EACH	996.0	472.0	524.0
X7800620	URETHANE PAVEMENT MARKING - LINE 5"	FOOT	129091.0	61366.0	67725.0
X7800630	URETHANE PAVEMENT MARKING - LINE 6"	FOOT	3571.0	1578.0	1993.0
Z0048665	RAILROAD PROTECTIVE LIABILITY INSURANCE	LSUM	1.0	0.0	1.0

* 1773/7706

FILE NAME = c:\pw_work\PWIDOT\LAUGHLINRL\d0151693\sht-S00.dgn	USER NAME = laughlinrl	DESIGNED -	REVISED -
		DRAWN -	REVISED -
	PLOT SCALE = 100.0000 ' / IN.	CHECKED -	REVISED -
	PLOT DATE = Apr-09-2010 12:54:13PM	DATE -	REVISED -

STATE OF ILLINOIS
DEPARTMENT OF TRANSPORTATION

SUMMARY OF QUANTITIES

SCALE: | SHEET NO. OF SHEETS | STA. TO STA.

F.A. RTE.	SECTION	COUNTY	TOTAL SHEETS	SHEET NO.
*	21RS-4, 22RS-5	LOGAN	31	3

CONTRACT NO. 72A44

ILLINOIS FED. AID PROJECT

HMA SURFACE REMOVAL

LOCATION STATION TO STATION	DESCRIPTION	LENGTH (FOOT)	WIDTH (FOOT)	AREA (SQ YD)	HMA SURF REM VAR DEPTH (SQ YD)	HMA SURF REM 2 1/4" (SQ YD)
PART "A" (FAS 1773)						
174+89.0 TO 170+74.9	SB DL	414.1	12.0	552.1	552.1	
170+74.9 TO 167+23.0	SB DL	351.9	12.0	469.2		469.2
167+23.0 TO 29+90.0	SB DL	13733.0	12.0	18310.7	18310.7	
29+90.0 TO 21+17.0	SB DL	873.0	12.0	1164.0		1164.0
174+89.0 TO 170+74.9	SB PL	414.1	0.0 - 12.0	276.1	276.1	
170+74.9 TO 167+23.0	SB PL	351.9	12.0	469.2		469.2
167+23.0 TO 29+90.0	SB PL	13733.0	12.0	18310.7	18310.7	
29+90.0 TO 21+17.0	SB PL	873.0	12.0	1164.0		1164.0
174+89.0 TO 170+74.9	NB DL	414.1	12.0-14.0	598.1	598.1	
170+74.9 TO 167+23.1	NB DL	351.8	14.0	508.2		508.2
167+23.1 TO 163+35.0	NB DL	388.1	14.0-24.0	819.3	819.3	
163+35.0 TO 29+90.0	NB DL	13345.0	12.0	17793.3	17793.3	
29+90.0 TO 21+17.0	NB DL	873.0	12.0	1164.0		1164.0
163+35.0 TO 29+90.0	NB PL	13345.0	12.0	17793.3	17793.3	
29+90.0 TO 21+17.0	NB PL	873.0	12.0	1164.0		1164.0
121+89.0 TO 119+58.1	SB LT TL	230.9	0.0 - 12.0	153.9	153.9	
119+58.1 TO 116+83.9	SB LT TL	274.2	12.0	365.6	365.6	
100+65.0 TO 98+41.5	SB LT TL	223.5	0.0 - 12.0	149.0	149.0	
98+41.5 TO 96+14.5	SB LT TL	227.0	12.0	302.7	302.7	
90+36.0 TO 87+94.8	SB LT TL	241.2	0.0 - 12.0	160.8	160.8	
87+94.8 TO 85+13.1	SB LT TL	281.7	12.0	375.6	375.6	
29+90.0 TO 27+87.1	SB LT TL	202.9	0.0 - 12.0	135.3		135.3
27+87.1 TO 25+29.1	SB LT TL	258.0	12.0	344.0		344.0
23+50.1 TO 21+17.0	NB RT TL	233.1	12.0	310.8		310.8
157+78.0	MEDIAN	34.0	VARIES	100.0	100.0	
137+54.7	MEDIAN	100.0	VARIES	350.0	350.0	
127+24.7	MEDIAN	100.0	VARIES	350.0	350.0	
116+34.0	MEDIAN	155.0	VARIES	500.0	500.0	
95+55.0	MEDIAN	162.0	VARIES	515.0	515.0	
84+84.0	MEDIAN	90.0	VARIES	220.0	220.0	
72+20.0	MEDIAN	155.0	VARIES	385.0	385.0	
58+45.0	MEDIAN	120.0	VARIES	280.0	280.0	
24+70.0	MEDIAN	155.0	VARIES	335.0	335.0	
127+90.0 TO 82+10.0	SB OUTSIDE SHLDR	4580.0	10.0	5088.9	5088.9	
126+93.0 TO 116+80.0	SB INSIDE SHLDR	1013.0	6.0	675.3	675.3	
115+98.0 TO 96+00.0	SB INSIDE SHLDR	1998.0	6.0	1332.0	1332.0	
95+21.0 TO 85+05.0	SB INSIDE SHLDR	1016.0	6.0	677.3	677.3	
84+51.0 TO 82+10.0	SB INSIDE SHLDR	241.0	6.0	160.7	160.7	
127+90.0 TO 117+34.0	NB OUTSIDE SHLDR	1056.0	10.0	1173.3	1173.3	
115+60.0 TO 96+74.0	NB OUTSIDE SHLDR	1886.0	10.0	2095.6	2095.6	
94+78.0 TO 85+18.0	NB OUTSIDE SHLDR	960.0	10.0	1066.7	1066.7	
84+65.0 TO 82+10.0	NB OUTSIDE SHLDR	255.0	10.0	283.3	283.3	
126+93.0 TO 116+80.0	NB INSIDE SHLDR	1013.0	6.0	675.3	675.3	
115+98.0 TO 95+82.0	NB INSIDE SHLDR	2016.0	6.0	1344.0	1344.0	
95+21.0 TO 85+05.0	NB INSIDE SHLDR	1016.0	6.0	677.3	677.3	
84+51.0 TO 82+10.0	NB INSIDE SHLDR	241.0	6.0	160.7	160.7	
PART "B" (FAU 7706)						
21+17.0 TO 20+45.4	SB DL	71.6	12.0	95.5		95.5
21+17.0 TO 20+45.4	SB PL	71.6	12.0	95.5		95.5
21+17.0 TO 20+45.4	NB DL	71.6	12.0	95.5		95.5
21+17.0 TO 20+45.4	NB PL	71.6	12.0	95.5		95.5
21+17.0 TO 20+45.4	NB RT TL	71.6	12.0	95.5		95.5
STA EQ 20+45.38 BK = 7+16.66 AH						
7+16.7 TO 32+76.6	SB DL	2559.9	12.0	3413.3		3413.3
7+16.7 TO 32+76.6	SB PL	2559.9	12.0	3413.3		3413.3
7+16.7 TO 32+76.6	NB DL	2559.9	12.0	3413.3		3413.3
7+16.7 TO 32+76.6	NB PL	2559.9	12.0	3413.3		3413.3
7+16.7 TO 8+43.0	NB RT TL	126.3	12.0 - 0.0	84.2		84.2
9+30.0 TO 32+76.6	SB OUTSIDE SHLDR	2346.6	7.0	1825.1		1825.1
9+30.0 TO 25+84.0	NB OUTSIDE SHLDR	1654.0	7.0	1286.4		1286.4
26+76.0 TO 32+76.6	NB OUTSIDE SHLDR	600.6	7.0	467.1		467.1
25+56.0	MEDIAN	124.0	VARIES	219.4		219.4
STA EQ 32+76.61 BK = 32+67.00 AH						
32+67.0 TO 80+79.2	SB DL	4812.2	12.0	6416.2		6416.2
32+67.0 TO 80+79.2	SB PL	4812.2	12.0	6416.2		6416.2

HMA SURFACE REMOVAL - CONTINUED

LOCATION STATION TO STATION	DESCRIPTION	LENGTH (FOOT)	WIDTH (FOOT)	AREA (SQ YD)	HMA SURF REM VAR DEPTH (SQ YD)	HMA SURF REM 2 1/4" (SQ YD)
32+67.0 TO 80+79.2	NB DL	4812.2	12.0	6416.2		6416.2
32+67.0 TO 80+79.2	NB PL	4812.2	12.0	6416.2		6416.2
66+82.0 TO 68+25.9	SB LT TL	143.9	0.0 - 12.0	95.9		95.9
68+25.9 TO 69+25.9	SB LT TL	100.0	12.0	133.3		133.3
70+08.1 TO 71+08.1	NB LT TL	100.0	12.0	133.3		133.3
71+08.1 TO 72+51.0	NB LT TL	142.9	12.0 - 0.0	95.3		95.3
45+57.3	MEDIAN	120.0	VARIES	133.2		133.2
69+67.0	MEDIAN	82.2	12.0	109.6		109.6
32+67.0 TO 69+25.0	SB OUTSIDE SHLDR	3658.0	7.0	2845.1		2845.1
70+08.0 TO 80+79.2	SB OUTSIDE SHLDR	1071.2	7.0	833.2		833.2
32+67.0 TO 40+25.0	NB OUTSIDE SHLDR	758.0	7.0	589.6		589.6
41+14.0 TO 45+14.0	NB OUTSIDE SHLDR	400.0	7.0	311.1		311.1
46+03.0 TO 69+25.0	NB OUTSIDE SHLDR	2322.0	7.0	1806.0		1806.0
70+08.0 TO 80+79.0	NB OUTSIDE SHLDR	1071.0	7.0	833.0		833.0
BRIDGE OMMISSION STA 80+79.18 TO 83+49.80						
83+49.8 TO 138+62.1	SB DL	5512.3	12.0	7349.7		7349.7
83+49.8 TO 138+62.1	SB PL	5512.3	12.0	7349.7		7349.7
83+49.8 TO 138+62.1	NB DL	5512.3	12.0	7349.7		7349.7
83+49.8 TO 138+62.1	NB PL	5512.3	12.0	7349.7		7349.7
92+84.0 TO 94+94.5	SB RT TL	210.5	0.0 - 12.0	140.3		140.3
94+94.5 TO 96+34.5	SB RT TL	140.0	12.0	186.7		186.7
94+17.0 TO 95+67.0	SB LT TL	150.0	0.0 - 12.0	100.0		100.0
95+67.0 TO 96+60.7	SB LT TL	93.7	12.0	124.9		124.9
97+58.8 TO 98+16.3	NB LT TL	57.5	12.0	76.7		76.7
98+16.3 TO 100+00.0	NB LT TL	183.7	12.0 - 0.0	122.5		122.5
97+63.4 TO 99+03.5	NB RT TL	140.1	12.0	186.8		186.8
99+03.5 TO 101+95.0	NB RT TL	291.5	12.0 - 0.0	194.3		194.3
97+09.8	MEDIAN	98.1	12.0	130.8		130.8
110+45.0	MEDIAN	35.0	VARIES	31.7		31.7
136+39.0	MEDIAN	75.0	VARIES	63.4		63.4
83+49.8 TO 96+51.0	SB OUTSIDE SHLDR	1301.2	7.0	1012.0		1012.0
97+86.0 TO 136+04.0	SB OUTSIDE SHLDR	3818.0	7.0	2969.6		2969.6
136+55.0 TO 138+62.1	SB OUTSIDE SHLDR	207.1	7.0	161.1		161.1
83+49.8 TO 96+57.0	NB OUTSIDE SHLDR	1307.2	7.0	1016.7		1016.7
97+48.0 TO 135+97.0	NB OUTSIDE SHLDR	3849.0	7.0	2993.7		2993.7
136+96.0 TO 138+62.1	NB OUTSIDE SHLDR	166.1	7.0	129.2		129.2
STA EQ 138+62.06 BK = 138+65.00 AH						
138+65.0 TO 157+42.6	SB DL	1877.6	12.0	2503.5		2503.5
138+65.0 TO 157+42.6	SB PL	1877.6	12.0	2503.5		2503.5
138+65.0 TO 157+42.6	NB DL	1877.6	12.0	2503.5		2503.5
138+65.0 TO 157+42.6	NB PL	1877.6	12.0	2503.5		2503.5
148+68.0	MEDIAN	80.0	VARIES	63.4		63.4
138+65.0 TO 148+80.0	SB OUTSIDE SHLDR	1015.0	7.0	789.4		789.4
149+38.0 TO 157+42.6	SB OUTSIDE SHLDR	804.6	7.0	625.8		625.8
138+65.0 TO 157+42.6	NB OUTSIDE SHLDR	1877.6	7.0	1460.4		1460.4
STA EQ 157+42.60 BK = 1746+30.50 AH						
1746+30.5 TO 1758+07.5	SB DL	1177.0	12.0	1569.3		1569.3
1746+30.5 TO 1758+07.5	SB PL	1177.0	12.0	1569.3		1569.3
1746+30.5 TO 1758+07.5	NB DL	1177.0	12.0	1569.3		1569.3
1746+30.5 TO 1758+07.5	NB PL	1177.0	12.0	1569.3		1569.3
1747+80.0 TO 1753+00.0	NB LT TL	520.0	12.0	693.3		693.3
1753+00.0 TO 1754+67.0	NB LT TL	167.0	12.0 - 0.0	111.3		111.3
1753+60.0 TO 1754+86.0	SB LT TL	126.0	0.0 - 12.0	84.0		84.0
1754+86.0 TO 1757+36.0	SB LT TL	250.0	12.0	333.3		333.3
1747+42.0	MEDIAN	70.0	VARIES	143.4		143.4
1757+72.0	MEDIAN	75.0	VARIES	140.9		140.9
1746+30.5 TO 1746+68.0	SB OUTSIDE SHLDR	37.5	7.0	29.2		29.2
1747+13.0 TO 1750+85.0	SB OUTSIDE SHLDR	372.0	7.0	289.3		289.3
1753+02.0 TO 1757+31.0	SB OUTSIDE SHLDR	429.0	7.0	333.7		333.7
1746+30.5 TO 1746+74.0	NB OUTSIDE SHLDR	43.5	7.0	33.8		33.8
1748+23.0 TO 1757+31.0	NB OUTSIDE SHLDR	908.0	7.0	706.2		706.2
	PART "A" (FAS 1773) TOTAL:			94406.7		6892.6
	PART "B" (FAU 7706) TOTAL:			0.0		108277.1
	JOB TOTAL:			94406.7		115169.8

* FAS 773/ FAU 7706

FILE NAME = c:\pw_work\PWIDOT\LAUGHLINRL\d0151693\sht-schedule.dgn	USER NAME = laughlinrl	DESIGNED -	REVISED -
		DRAWN -	REVISED -
	PLOT SCALE = 100.0000 ' / IN.	CHECKED -	REVISED -
	PLOT DATE = Apr-09-2010 11:15:03AM	DATE -	REVISED -

STATE OF ILLINOIS
DEPARTMENT OF TRANSPORTATION

SCHEDULES

SCALE: | SHEET NO. OF SHEETS | STA. TO STA.

F.A. RTE.	SECTION	COUNTY	TOTAL SHEETS	SHEET NO.
*	21RS-4 ,22RS-5	LOGAN	31	4

CONTRACT NO. 72A44

ILLINOIS FED. AID PROJECT

HMA SURFACE SCHEDULE

LOCATION STATION TO STATION	DESCRIPTION	LENGTH (FOOT)	WIDTH (FOOT)	AREA (SQ YD)	BITUMINOUS MATERIALS (PRIME COAT) (TON)	AGGREGATE (PRIME COAT) (TON)	LEVEL BINDER MM N70 (TON)	HMA SURF CRSE MIX "D" N70 (TON)
PART "A" (FAS 1773)								
174+89.0 TO 21+17.0	SB DL	15372.0	12.0	20496.0	15.58	40.99	860.83	1721.66
174+89.0 TO 170+74.9	SB PL	414.1	0.0 - 12.0	276.1	0.21	0.55	11.59	23.19
170+74.9 TO 21+17.0	SB PL	14957.9	12.0	19943.9	15.16	39.89	837.64	1675.28
174+89.0 TO 170+74.9	NB DL	414.2	12.0 - 14.0	598.2	0.45	1.20	25.13	50.25
170+74.9 TO 167+23.0	NB DL	351.8	14.0	547.3	0.42	1.09	22.99	45.98
167+23.0 TO 163+35.0	NB DL	388.0	14.0 - 12.0	560.4	0.43	1.12	23.54	47.08
163+35.0 TO 21+17.0	NB DL	14218.0	12.0	18957.3	14.41	37.91	796.21	1592.42
167+23.0 TO 163+35.0	NB PL	388.0	0.0 - 12.0	258.7	0.20	0.52	10.86	21.73
163+35.0 TO 21+17.0	NB PL	14218.0	12.0	18957.3	14.41	37.91	796.21	1592.42
121+89.0 TO 119+58.1	SB LT TL	230.9	0.0 - 12.0	153.9	0.12	0.31	6.47	12.93
119+58.1 TO 116+83.9	SB LT TL	274.2	12.0	365.6	0.28	0.73	15.36	30.71
100+65.0 TO 98+41.5	SB LT TL	223.5	0.0 - 12.0	149.0	0.11	0.30	6.26	12.52
98+41.5 TO 96+14.5	SB LT TL	227.0	12.0	302.7	0.23	0.61	12.71	25.42
90+36.0 TO 87+94.8	SB LT TL	241.2	0.0 - 12.0	160.8	0.12	0.32	6.75	13.51
87+94.8 TO 85+13.1	SB LT TL	281.7	12.0	375.6	0.29	0.75	15.78	31.55
29+90.0 TO 27+87.1	SB LT TL	202.9	0.0 - 12.0	135.3	0.10	0.27	5.68	11.36
27+87.1 TO 25+29.1	SB LT TL	258.0	12.0	344.0	0.26	0.69	14.45	28.90
23+50.1 TO 21+17.0	NB RT TL	233.1	12.0	310.8	0.24	0.62	13.05	26.11
157+78.0	MEDIAN	34.0	VARIES	100.0	0.08	0.20	4.20	8.40
137+54.7	MEDIAN	100.0	VARIES	350.0	0.27	0.70	14.70	29.40
127+24.7	MEDIAN	100.0	VARIES	350.0	0.27	0.70	14.70	29.40
116+34.0	MEDIAN	155.0	VARIES	500.0	0.38	1.00	21.00	42.00
95+55.0	MEDIAN	162.0	VARIES	515.0	0.39	1.03	21.63	43.26
84+84.0	MEDIAN	90.0	VARIES	220.0	0.17	0.44	9.24	18.48
72+20.0	MEDIAN	155.0	VARIES	385.0	0.29	0.77	16.17	32.34
58+45.0	MEDIAN	120.0	VARIES	280.0	0.21	0.56	11.76	23.52
24+70.0	MEDIAN	164.0	VARIES	330.0	0.25	0.66	13.86	27.72
PART "B" (FAU 7706)								
21+17.0 TO 20+45.4	SB DL	71.6	12.0	95.5	0.07	0.19	4.01	8.02
21+17.0 TO 20+45.4	SB PL	71.6	12.0	95.5	0.07	0.19	4.01	8.02
21+17.0 TO 20+45.4	NB PL	71.6	12.0	95.5	0.07	0.19	4.01	8.02
21+17.0 TO 20+45.4	NB DL	71.6	12.0	95.5	0.07	0.19	4.01	8.02
21+17.0 TO 20+45.4	NB RT TL	71.6	12.0	95.5	0.07	0.19	4.01	8.02
STA EQ 20+45.38 BK = 7+16.66 AH						0.00		
7+16.7 TO 32+76.6	SB DL	2560.0	12.0	3413.3	2.59	6.83	143.36	286.71
7+16.7 TO 32+76.6	SB PL	2560.0	12.0	3413.3	2.59	6.83	143.36	286.71
7+16.7 TO 32+76.6	NB PL	2560.0	12.0	3413.3	2.59	6.83	143.36	286.71
7+16.7 TO 32+76.6	NB DL	2560.0	12.0	3413.3	2.59	6.83	143.36	286.71
7+16.7 TO 8+43.0	NB RT TL	126.3	12.0 - 0.0	84.2	0.06	0.17	3.54	7.08
25+56.0	MEDIAN	124.0	VARIES	129.4	0.10	0.26	5.43	10.87
STA EQ 32+76.61 BK = 32+67.00 AH						0.00		
32+67.0 TO 80+79.2	SB DL	4812.2	12.0	6416.2	4.88	12.83	269.48	538.96
32+67.0 TO 80+79.2	SB PL	4812.2	12.0	6416.2	4.88	12.83	269.48	538.96
32+67.0 TO 80+79.2	NB DL	4812.2	12.0	6416.2	4.88	12.83	269.48	538.96
32+67.0 TO 80+79.2	NB PL	4812.2	12.0	6416.2	4.88	12.83	269.48	538.96
66+82.0 TO 68+25.9	SB LT TL	143.9	0.0 - 12.0	95.9	0.07	0.19	4.03	8.06
68+25.9 TO 69+25.9	SB LT TL	100.0	12.0	133.3	0.10	0.27	5.60	11.20
70+08.1 TO 71+08.1	NB LT TL	100.0	12.0	133.3	0.10	0.27	5.60	11.20
71+08.1 TO 72+51.0	NB LT TL	142.9	12.0 - 0.0	95.3	0.07	0.19	4.00	8.00
45+57.3	MEDIAN	136.0	VARIES	133.2	0.10	0.27	5.59	11.19
69+65.5	MEDIAN	166.0	VARIES	153.0	0.12	0.31	6.43	12.85
BRIDGE OMISSION STA 80+79.18 TO STA 83+49.84						0.00		
83+49.8 TO 138+62.1	SB DL	5512.2	12.0	7349.6	5.59	14.70	308.68	617.37
83+49.8 TO 138+62.1	SB PL	5512.2	12.0	7349.6	5.59	14.70	308.68	617.37
83+49.8 TO 138+62.1	NB DL	5512.2	12.0	7349.6	5.59	14.70	308.68	617.37
83+49.8 TO 138+62.1	NB PL	5512.2	12.0	7349.6	5.59	14.70	308.68	617.37
92+84.0 TO 94+94.5	SB RT TL	210.5	0.0 - 12.0	140.3	0.11	0.28	5.89	11.79
94+94.5 TO 96+34.5	SB RT TL	140.0	12.0	186.7	0.14	0.37	7.84	15.68
94+17.0 TO 95+67.0	SB LT TL	150.0	0.0 - 12.0	100.0	0.08	0.20	4.20	8.40
95+67.0 TO 96+60.7	SB LT TL	93.7	12.0	124.9	0.09	0.25	5.25	10.49
97+58.8 TO 98+16.3	NB LT TL	57.5	12.0	76.7	0.06	0.15	3.22	6.44
98+16.3 TO 100+00.0	NB LT TL	183.7	12.0 - 0.0	122.5	0.09	0.24	5.14	10.29
97+63.4 TO 99+03.5	NB RT TL	140.1	12.0	186.8	0.14	0.37	7.85	15.69
99+03.5 TO 101+95.0	NB RT TL	291.5	12.0 - 0.0	194.3	0.15	0.39	8.16	16.32
97+09.8	MEDIAN	98.1	12.0	130.8	0.10	0.26	5.49	10.99

HMA SURFACE SCHEDULE CONTINUED

LOCATION STATION TO STATION	DESCRIPTION	LENGTH (FOOT)	WIDTH (FOOT)	AREA (SQ YD)	BITUMINOUS MATERIALS (PRIME COAT) (TON)	AGGREGATE (PRIME COAT) (TON)	LEVEL BINDER MM N70 (TON)	HMA SURF CRSE MIX "D" N70 (TON)
110+45.0	MEDIAN	35.0	VARIES	31.7	0.02	0.06	1.33	2.66
136+39.0	MEDIAN	75.0	VARIES	63.4	0.05	0.13	2.66	5.33
STA EQ 138+62.06 BK = 138+65.00 AH								
138+65.0 TO 157+42.4	SBDL	1877.4	12.0	2503.2	1.90	5.01	105.13	210.27
138+65.0 TO 157+42.4	SB PL	1877.4	12.0	2503.2	1.90	5.01	105.13	210.27
138+65.0 TO 157+42.4	NB DL	1877.4	12.0	2503.2	1.90	5.01	105.13	210.27
138+65.0 TO 157+42.4	NB PL	1877.4	12.0	2503.2	1.90	5.01	105.13	210.27
148+68.0	MEDIAN	80.0	VARIES	63.4	0.05	0.13	2.66	5.33
STA EQ 157+42.40 BK = 1746+30.50 AH						0.00		
1746+30.5 TO 1758+07.5	SB DL	1177.0	12.0	1569.3	1.19	3.14	65.91	131.82
1746+30.5 TO 1758+07.5	SB PL	1177.0	12.0	1569.3	1.19	3.14	65.91	131.82
1746+30.5 TO 1758+07.5	NB DL	1177.0	12.0	1569.3	1.19	3.14	65.91	131.82
1746+30.5 TO 1758+07.5	NB PL	1177.0	12.0	1569.3	1.19	3.14	65.91	131.82
1747+80.0 TO 1753+00.0	NB LT TL	520.0	12.0	693.3	0.53	1.39	29.12	58.24
1753+00.0 TO 1754+67.0	NB LT TL	167.0	12.0 - 0.0	111.3	0.08	0.22	4.68	9.35
1753+60.0 TO 1754+86.0	SB LT TL	126.0	0.0 - 12.0	84.0	0.06	0.17	3.53	7.06
1754+86.0 TO 1757+36.0	SB LT TL	250.0	12.0	333.3	0.25	0.67	14.00	28.00
1747+42.0	MEDIAN	70.0	VARIES	143.4	0.11	0.29	6.02	12.05
1757+72.0	MEDIAN	75.0	VARIES	140.9	0.11	0.28	5.92	11.84
PART "A" (FAS 1773) TOTAL:				85922.92	65.30	171.85	3608.76	7217.53
PART "B" (FAU 7706) TOTAL:				89369.64	67.92	178.74	3753.52	7507.05
JOB TOTAL:				175292.6	133.2	350.6	7362.3	14724.6

* FAS 773/ FAU 7706

INCIDENTAL HMA SURFACING, HMA & PCC BUTT JOINTS & TEMP RAMPS

LOCATION STATION	T /	DESCRIPTION	WIDTH AT EOP (FT)	WIDTH AT BUTT JT (FT)	LENGTH (FT)	AREA (SQ YD)	HMA THICKNESS (IN)	INC HMA SURF (TONS)	BIT MATS (PR CT) (TONS)	AGG (PRIME COAT) (TONS)	HMA BUTT JOINT (SQ YD)	TEMP RAMP (SQ YD)	AGG SURF CRSE TYPE B (TON)
PART "A" (FAS 1773)													
174+89.00		BEGIN IMP	24.0	24.0	30.0	80.0	2.25		0.03	0.16	80.0	13.3	
138+00.0	RT	SIDE ROAD	95.0	25.0	40.0	266.7	2.25	33.6	0.10	0.53	266.7	13.9	
136+72.0	LT	SIDE ROAD	95.0	20.0	45.0	287.5	2.25	36.2	0.11	0.58	287.5	11.1	
84+84.0	LT	CE	81.0	35.0	25.0	161.1	2.25	20.3	0.06	0.32	161.1	19.4	
76+00.0	RT	CE	55.0	45.0	10.0	55.6	8.0	24.9	0.02	0.11			2.1
74+00.0	RT	CE	60.0	50.0	10.0	61.1	8.0	27.4	0.02	0.12			2.4
72+20.0	RT	SIDE ROAD	69.0	40.0	23.0	139.3	2.25	17.5	0.05	0.28	139.3	22.2	
72+20.0	LT	SIDE ROAD	105.0	25.0	28.0	202.2	2.25	25.5	0.08	0.40	202.2	13.9	
58+45.0	RT	SIDE ROAD	112.0	14.0	40.0	280.0	2.25	35.3	0.11	0.56	280.0	7.8	
58+45.0	LT	SIDE ROAD	142.0	20.0	50.0	450.0	2.25	56.7	0.17	0.90	450.0	11.1	
24+85.0	LT	SIDE ROAD	82.0	14.0	160.0	853.3	2.25	107.5	0.32	1.71	853.3	7.8	
24+46.0	LT	SIDE ROAD	118.0	26.0	140.0	1120.0	2.25	141.1	0.43	2.24	1120.0	14.4	
PART "B" (FAU 7706)													
STA EQ 20+45.38 BK = 7+16.66 AH													
26+31.0	LT	SIDE ROAD	116.0	32.0	45.0	370.0	2.25	46.6	0.14	0.74	370.0	17.8	
STA EQ 32+76.61 BK = 32+67.00 AH													
40+50.00	LT	SIDE ROAD	95.0	36.0	40.0	291.1	2.25	36.7	0.11	0.58	291.1	20.0	
45+57.0	LT	SIDE ROAD	64.0	34.0	26.0	141.6	2.25	17.8	0.05	0.28	141.6	18.9	
69+66.0	RT	SIDE ROAD	134.0	29.0	41.0	371.3	2.25	46.8	0.14	0.74	371.3	16.1	
69+65.5	LT	SIDE ROAD	127.0	29.0	40.0	346.7	2.25	43.7	0.13	0.69	346.7	16.1	
80+79.2		BEGIN BRIDG	48.0	48.0	30.0	160.0	2.25		0.06	0.32	160.0	26.7	
BRIDGE OMISSION STA 80+79.18 TO STA 83+49.84													
83+49.8		END BRIDGE	48.0	48.0	30.0	160.0	2.25		0.06	0.32	160.0	26.7	
97+07.5	RT	SIDE ROAD	170.0	36.0	110.0	1258.9	2.25	158.6	0.48	2.52	1258.9	20.0	
97+07.5	LT	SIDE ROAD	160.0	36.0	100.0	1088.9	2.25	137.2	0.41	2.18	1088.9	20.0	
136+24.0	RT	PE	54.0	17.0	44.0	173.6	2.25	21.9	0.07	0.35	173.6	9.4	
136+38.5	LT	SIDE ROAD	110.0	31.0	50.0	391.7	2.25	49.4	0.15	0.78	391.7	17.2	
STA EQ 138+62.06 BK = 138+65.00 AH													
149+00.0	RT	SIDE ROAD	62.0	40.0	24.0	136.0	2.25	17.1	0.05	0.27	136.0	22.2	
STA EQ 157+42.40 BK = 1746+30.50 AH													
1746+94.0	RT	SIDE ROAD	52.0	18.0	138.0	536.7	2.25	67.6	0.20	1.07	536.7	10.0	
1747+36.5	LT	SIDE ROAD	190.0	28.0	50.0	605.6	2.25	76.3	0.23	1.21	605.6	15.6	
1751+50.0	RT	MERGE LANE	14.0	14.0	700.0	3417.0	2.25	430.5	1.30	6.83	17.1	7.8	
1757+68.0	RT	SIDE ROAD	81.0	67.0	16.0	131.6	2.25	16.6	0.05	0.26	81.9	37.2	
1757+68.0	LT	SIDE ROAD	64.0	50.0	22.0	139.3	2.25	17.6	0.05	0.28	61.1	27.8	
1758+07.5		END IMP	60.0	60.0	30.0	200.0	2.25		0.08	0.40	73.3	33.3	
						PART "A" (FAS 1773) TOTAL:		526.0	1.5	7.9	3840.1	135.0	4.5
						PART "B" (FAU 7706) TOTAL:		1184.4	3.8	19.8	6265.3	362.8	0.0
						JOB TOTAL:		1710.4	5.3	27.8	10105.4	497.8	4.5

HMA SHOULDER SCHEDULE

LOCATION STATION TO STATION	DESCRIPTION	LENGTH (FOOT)	WIDTH (FOOT)	AREA (SQ YD)	HMA SHOULDERS (TON)	BIT MATS (PRIME COAT) (TON)
PART "A" (FAS 1773)						
127+90.0 TO 82+10.0	SB OUTSIDE	4580.0	10.0	5088.9	641.20	1.93
126+93.0 TO 116+69.0	SB INSIDE	1024.0	6.0	682.7	86.02	0.26
115+98.0 TO 95+82.0	SB INSIDE	2016.0	6.0	1344.0	169.34	0.51
95+21.0 TO 85+05.0	SB INSIDE	1016.0	6.0	677.3	85.34	0.26
84+51.0 TO 82+10.0	SB INSIDE	241.0	6.0	160.7	20.24	0.06
126+93.0 TO 116+69.0	NB INSIDE	1024.0	6.0	682.7	86.02	0.26
115+98.0 TO 95+82.0	NB INSIDE	2016.0	6.0	1344.0	169.34	0.51
95+21.0 TO 85+05.0	NB INSIDE	1016.0	6.0	677.3	85.34	0.26
84+51.0 TO 82+10.0	NB INSIDE	241.0	6.0	160.7	20.24	0.06
127+90.0 TO 117+34.0	NB OUTSIDE	1056.0	10.0	1173.3	147.84	0.45
115+60.0 TO 96+74.0	NB OUTSIDE	1886.0	10.0	2095.6	264.04	0.80
94+78.0 TO 85+18.0	NB OUTSIDE	960.0	10.0	1066.7	134.40	0.41
84+65.0 TO 82+10.0	NB OUTSIDE	255.0	10.0	283.3	35.70	0.11
PART "B" (FAU 7706)						
STA EQ 20+45.38 BK = 7+16.66 AH						
9+30.0 TO 32+76.6	SB OUTSIDE	2346.6	7.0	1825.1	229.97	0.69
9+30.0 TO 26+00.0	NB OUTSIDE	1670.0	7.0	1298.9	163.66	0.49
26+63.0 TO 32+76.6	NB OUTSIDE	613.6	7.0	477.3	60.13	0.18
STA EQ 32+76.61 BK = 32+67.00 AH						
32+67.0 TO 66+70.0	SB OUTSIDE	3403.0	7.0	2646.8	333.49	1.01
72+60.0 TO 80+79.2	SB OUTSIDE	819.2	7.0	637.1	80.28	0.24
32+67.0 TO 45+14.0	NB OUTSIDE	1247.0	7.0	969.9	122.21	0.37
46+00.0 TO 66+70.0	NB OUTSIDE	2070.0	7.0	1610.0	202.86	0.61
72+60.0 TO 80+79.2	NB OUTSIDE	819.2	7.0	637.1	80.28	0.24
BRIDGE OMISSION STA 80+79.18 TO STA 83+49.84						
83+49.8 TO 94+00.0	SB OUTSIDE	1050.2	7.0	816.8	102.92	0.31
100+10.0 TO 136+04.0	SB OUTSIDE	3594.0	7.0	2795.3	352.21	1.06
136+52.0 TO 138+62.1	SB OUTSIDE	210.1	7.0	163.4	20.59	0.06
83+49.8 TO 94+00.0	NB OUTSIDE	1050.2	7.0	816.8	102.92	0.31
100+10.0 TO 136+12.0	NB OUTSIDE	3602.0	7.0	2801.6	353.00	1.06
136+83.0 TO 138+62.1	NB OUTSIDE	179.1	7.0	139.3	17.55	0.05
STA EQ 138+62.06 BK = 138+65.00 AH						
138+65.0 TO 157+42.4	SB OUTSIDE	1877.4	7.0	1460.2	183.99	0.55
138+65.0 TO 157+42.4	NB OUTSIDE	1877.4	7.0	1460.2	183.99	0.55
STA EQ 157+42.40 BK = 1746+30.50 AH						
1746+30.5 TO 1750+84.0	SB OUTSIDE	453.5	7.0	352.7	44.44	0.13
1752+58.0 TO 1757+38.0	SB OUTSIDE	480.0	7.0	373.3	47.04	0.14
1746+30.5 TO 1748+23.0	NB OUTSIDE	192.5	7.0	149.7	18.87	0.06
1748+61.0 TO 1757+39.0	NB OUTSIDE	878.0	7.0	682.9	86.04	0.26
1757+97.0 TO 1758+07.5	NB OUTSIDE	10.5	7.0	8.2	1.03	0.00
	PART "A" (FAS 1773) TOTAL:			15437.1	1945.1	5.9
	PART "B" (FAU 7706) TOTAL:			22122.6	2787.4	8.4
	JOB TOTAL:			37559.7	4732.5	14.3

* FAS 773/ FAU 7706

FILE NAME = c:\pw_work\PWIDOT\LAUGHLINRL\d0151693\sht-schedule.dgn	USER NAME = laughlinrl	DESIGNED -	REVISED -
	PLOT SCALE = 100.0000 ' / IN.	DRAWN -	REVISED -
	PLOT DATE = Apr-09-2010 11:15:09AM	CHECKED -	REVISED -
		DATE -	REVISED -

STATE OF ILLINOIS
DEPARTMENT OF TRANSPORTATION

SCHEDULES

SCALE: | SHEET NO. OF SHEETS | STA. TO STA.

F.A. RTE.	SECTION	COUNTY	TOTAL SHEETS	SHEET NO.
*	21RS-4 , 22RS-	LOGAN	31	6

CONTRACT NO. 72A44

ILLINOIS FED. AID PROJECT

AGG SHOULDER SCHEDULE

LOCATION STATION	TO	STATION	DESCRIPTION	WIDTH (FOOT)	AGG SHLDRS B (TON)
PART "A" (FAS 1773)					
174+89.0	TO	138+48.0	SB OUTSIDE	3.0	112.3
137+79.5	TO	76+27.5	SB OUTSIDE	3.0	189.8
75+72.5	TO	74+30.0	SB OUTSIDE	3.0	4.4
73+70.0	TO	72+60.0	SB OUTSIDE	3.0	3.4
71+96.0	TO	21+17.0	SB OUTSIDE	3.0	156.7
167+23.1	TO	157+90.0	SB INSIDE	3.0	28.8
157+67.0	TO	137+93.0	SB INSIDE	3.0	60.9
137+05.0	TO	127+68.0	SB INSIDE	3.0	28.9
126+92.0	TO	116+92.0	SB INSIDE	3.0	30.8
115+98.0	TO	95+93.0	SB INSIDE	3.0	61.8
95+07.0	TO	85+05.0	SB INSIDE	3.0	30.9
84+40.0	TO	72+57.0	SB INSIDE	3.0	36.5
71+84.5	TO	58+75.0	SB INSIDE	3.0	40.4
57+94.0	TO	29+90.0	SB INSIDE	3.0	86.5
23+55.0	TO	21+17.0	SB INSIDE	3.0	7.3
167+23.1	TO	157+90.0	NB INSIDE	3.0	28.8
157+67.0	TO	137+74.0	NB INSIDE	3.0	61.5
136+75.0	TO	127+61.0	NB INSIDE	3.0	28.2
126+90.0	TO	116+92.0	NB INSIDE	3.0	30.8
115+98.0	TO	95+93.0	NB INSIDE	3.0	61.8
95+07.0	TO	85+05.0	NB INSIDE	3.0	30.9
84+45.0	TO	72+67.0	NB INSIDE	3.0	36.3
71+75.0	TO	58+67.0	NB INSIDE	3.0	40.3
58+00.0	TO	29+90.0	NB INSIDE	3.0	86.7
23+55.0	TO	21+17.0	NB INSIDE	3.0	7.3
175+85.9	TO	137+11.5	NB OUTSIDE	3.0	119.5
136+36.0	TO	117+32.0	NB OUTSIDE	3.0	58.7
115+70.0	TO	96+69.0	NB OUTSIDE	3.0	58.6
94+74.0	TO	85+22.5	NB OUTSIDE	3.0	29.3
84+60.5	TO	72+53.0	NB OUTSIDE	3.0	37.2
71+66.0	TO	58+25.0	NB OUTSIDE	3.0	41.4
57+03.0	TO	25+53.0	NB OUTSIDE	3.0	97.2
PART "B" (FAU 7706)					
21+17.0	TO	20+45.4	SB OUTSIDE	3.0	2.2
21+17.0	TO	20+45.4	SB INSIDE	3.0	2.2
21+17.0	TO	20+45.4	NB INSIDE	3.0	2.2
21+17.0	TO	20+45.4	NB OUTSIDE	3.0	2.2
STA EQ 20+45.38 BK = 7+16.66 AH					
7+16.7	TO	32+76.6	SB OUTSIDE	3.0	79.0
7+16.7	TO	11+60.0	SB INSIDE	3.0	13.7
7+16.7	TO	11+60.0	NB INSIDE	3.0	13.7
7+16.7	TO	26+00.0	NB OUTSIDE	3.0	58.1
26+65.0	TO	32+76.6	NB OUTSIDE	3.0	18.9
STA EQ 32+76.61 BK = 32+67.00 AH					
32+67.0	TO	69+42.0	SB OUTSIDE	3.0	113.4
70+07.0	TO	72+40.0	SB OUTSIDE	3.0	7.2
32+67.0	TO	45+14.0	NB OUTSIDE	3.0	38.5
46+00.0	TO	69+44.0	NB OUTSIDE	3.0	72.3
69+84.0	TO	70+91.0	NB OUTSIDE	3.0	3.3
BRIDGE OMISSION STA 80+79.18 TO STA 83+49.84					
95+15.0	TO	96+70.0	SB OUTSIDE	3.0	4.8
97+70.0	TO	136+04.0	SB OUTSIDE	3.0	118.3
136+49.0	TO	138+62.1	SB OUTSIDE	3.0	6.6
95+15.0	TO	96+55.0	NB OUTSIDE	3.0	4.3
97+45.0	TO	136+12.0	NB OUTSIDE	3.0	119.3
136+85.0	TO	138+10.0	NB OUTSIDE	3.0	3.9
STA EQ 138+62.06 BK = 138+65.00 AH					
149+46.0	TO	157+42.4	SB OUTSIDE	3.0	24.6
149+15.0	TO	157+42.4	NB OUTSIDE	3.0	25.5
STA EQ 157+42.40 BK = 1746+30.50 AH					
1746+30.5	TO	1746+69.0	SB OUTSIDE	3.0	1.2
1747+00.0	TO	1757+38.5	SB OUTSIDE	3.0	32.0

AGG SHOULDER SCHEDULE - CONTINUED

LOCATION STATION	TO	STATION	DESCRIPTION	WIDTH (FOOT)	AGG SHLDRS B (TON)
1746+30.5	TO	1747+16.0	NB OUTSIDE	3.0	2.6
1747+68.0	TO	1757+40.0	NB OUTSIDE	3.0	30.0
OLD 121			NB RT	3.0	3.7
OLD 121			NB LT	3.0	4.6
OLD 121			SB RT	3.0	22.8
OLD 121			SB LT	3.0	15.5
1757+96.5	TO	1758+07.5	NB OUTSIDE	3.0	0.3
			PART "A" (FAS 1773) TOTAL:		1,734.1
			PART "B" (FAU 7706) TOTAL:		612.0
			JOB TOTAL:		2,346.1

PREFORMED PLASTIC PAVEMENT MARKINGS, TYPE B, INLAID - LINE 8"

LOCATION Stations	DESCRIPTION	LENGTH (FT)	WHITE SOLID (FT)
PART "A" (FAS 1773)			
KICKAPOO ST - ISLAND BORDER	ALONG FAS 1773	70.6	70.6
KICKAPOO ST - ISLAND BORDER	ALONG TURNLANE	75.1	75.1
KICKAPOO ST - ISLAND BORDER	ALONG KICKAPOO NB	67.8	67.8
PART "B" (FAU 7706)			
	PART "A" (FAS 1773) TOTAL:		214
	PART "B" (FAU 7706) TOTAL:		0
	JOB TOTAL:		214

PREFORMED PLASTIC PAVEMENT MARKINGS, TYPE B, INLAID - LINE 12"

LOCATION Stations	DESCRIPTION	TOTAL LENGTH (FT)	WHITE SOLID (FT)	YELLOW SOLID (FT)
PART "A" (FAS 1773)				
172+64 TO 166+19	MEDIAN CHEVRONS (30' CTS)	180.6		180.6
KICKAPOO ST	ISLAND CHEVRONS (20' CTS)	70.9	70.9	
PART "B" (FAU 7706)				
66+82 TO 68+25	MEDIAN CHEVRONS (20' CTS)	34.0		34.0
71+08 TO 72+51	MEDIAN CHEVRONS (20' CTS)	34.5		34.5
94+17 TO 95+67	MEDIAN CHEVRONS (20' CTS)	33.7		33.7
98+61 TO 100+00	MEDIAN CHEVRONS (20' CTS)	33.6		33.6
135+77 TO 137+90	MEDIAN CHEVRONS (20' CTS)	45.2		45.2
OLD 121	GORE CHEVRONS (20' CTS)	21.2		21.2
1750+81 TO 1751+74	GORE CHEVRONS (20' CTS)	41.1		41.1
	PART "A" (FAS 1773) TOTAL:		71	181
	PART "B" (FAU 7706) TOTAL:		0	243
	JOB TOTAL:		71	424

PREFORMED PLASTIC PAVEMENT MARKINGS, TYPE B, INLAID - LINE 24"

LOCATION	DESCRIPTION	LENGTH (FT)	WHITE SOLID (FT)
PART "A" (FAS 1773)			
KICKAPOO ST	STOP BAR	25.80	25.8
PART "B" (FAU 7706)			
NICHOLSON NORTH	STOP BAR	17.20	17.2
NICHOLSON SOUTH	STOP BAR	18.00	18.0
UNION NORTH	STOP BAR	34.50	34.5
UNION SOUTH	STOP BAR	34.50	34.5
	PART "A" (FAS 1773) TOTAL:		26
	PART "B" (FAU 7706) TOTAL:		104
	JOB TOTAL:		130

PREFORMED PLASTIC PAVEMENT MARKINGS, TYPE B, INLAID - LINE 5"

LOCATION Stations	DESCRIPTION	LENGTH (FT)	WHITE SKIP-DASH (FT)
PART "A" (FAS 1773)			
171+00.0 TO 21+17.0	SB (10' DASH)	14983.00	3750
163+35.0 TO 21+17.0	NB (10' DASH)	14218.00	3560
PART "B" (FAU 7706)			
21+17.0 TO 20+45.4	SB (10' DASH)	71.62	20
21+17.0 TO 20+45.4	NB (10' DASH)	71.62	20
STA EQ 20+45.38 BK = 7+16.66 AH			
7+16.7 TO 32+76.6	SB (10' DASH)	2559.95	640
7+16.7 TO 32+76.6	NB (10' DASH)	2559.95	640
STA EQ 32+76.61 BK = 32+67.00 AH			
32+67.0 TO 80+79.2	SB (10' DASH)	4812.18	1210
32+67.0 TO 80+79.2	NB (10' DASH)	4812.18	1210
BRIDGE OMISSION STA 80+79.18 TO STA 83+49.84			
83+49.8 TO 138+62.1	SB (10' DASH)	5512.22	1380
83+49.8 TO 138+62.1	NB (10' DASH)	5512.22	1380
STA EQ 138+62.06 BK = 138+65.00 AH			
138+65.0 TO 157+42.4	SB (10' DASH)	1877.40	470
138+65.0 TO 157+42.4	NB (10' DASH)	1877.40	470
STA EQ 157+42.40 BK = 1746+30.50 AH			
1746+30.5 TO 1758+07.5	SB (10' DASH)	1177.00	300
1746+30.5 TO 1758+07.5	NB (10' DASH)	1177.00	300
	PART "A" (FAS 1773) TOTAL:		7310
	PART "B" (FAU 7706) TOTAL:		8040
	JOB TOTAL:		15350

PREFORMED PLASTIC PAVEMENT MARKINGS, TYPE B, INLAID LETTERS AND SYMBOLS

LOCATION Stations	DESCRIPTION	WHITE (SQ FT)
PART "A" (FAS 1773)		
157+00	LANE DROP ARROW	41.5
155+50	LANE DROP ARROW	41.5
119+58.1 TO 116+83.9	SB LT TL - 3 LEFT ARROWS	46.8
98+41.5 TO 96+14.5	SB LT TL - 2 LEFT ARROWS	31.2
87+94.8 TO 85+13.1	SB LT TL - 2 LEFT ARROWS	31.2
27+87.1 TO 25+29.1	SB LT TL - 2 LEFT ARROWS	31.2
23+55.0 TO 21+17	NB RT TL - 2 RIGHT ARROWS	31.2
PART "B" (FAU 7706)		
STA EQ 20+45.38 BK = 7+16.66 AH		
STA EQ 32+76.61 BK = 32+67.00 AH		
68+25.9 TO 69+25.9	SB LT TL - 2 LEFT ARROWS	31.2
70+08.1 TO 71+08.1	NB LT TL - 2 LEFT ARROWS	31.2
BRIDGE OMISSION STA 80+79.18 TO STA 83+49.84		
94+94.5 TO 96+34.5	SB RT TL - 2 RIGHT ARROWS	31.2
95+67.0 TO 96+60.7	SB LT TL - 2 LEFT ARROWS	31.2
UNION ST NORTH	2 COMBINATION LEFT AND THROUGH ARROWS	52.0
UNION ST NORTH	2 RT ARROWS	31.2
UNION ST SOUTH	1 COMBINATION LEFT AND THROUGH ARROWS	26.0
UNION ST SOUTH	1 RT ARROWS	15.6
97+35 TO 97+60	RT ENTRANCE, 2 RIGHT ARROWS	31.2
97+63.4 TO 99+03.5	NB RT TL - 2 RIGHT ARROWS	31.2
97+60 TO 98+61.0	NB LT TL - 2 LEFT ARROWS	31.2
STA EQ 138+62.06 BK = 138+65.00 AH		
STA EQ 157+42.40 BK = 1746+30.50 AH		
1747+80.00 TO 1753+00	NB LT TL - 5 LEFT ARROWS	78.0
1754+86.00 TO 1757+36.0	SB LT TL - 3 LEFT ARROWS	46.8
OLD 121 NB	WRONG WAY ARROW	24.3
	PART "A" (FAS 1773) TOTAL:	172
	PART "B" (FAU 7706) TOTAL:	492
	JOB TOTAL:	664

* FAS 773/ FAU 7706

URETHANE PAVEMENT MARKINGS - LINE 5"

LOCATION Stations	DESCRIPTION	LENGTH (FT)	YELLOW SOLID (FT)	WHITE SOLID (FT)
PART "A" (FAS 1773)				
174+89 TO 138+48	SB OUTSIDE EDGELINE	3641.0		3641.0
138+50	SB OUTSIDE RADIUS	35.0		35.0
137+72	SB OUTSIDE RADIUS	70.0		70.0
137+72 TO 72+72	SB OUTSIDE EDGELINE	6500.0		6500.0
72+72	SB OUTSIDE RADIUS	38.0		38.0
71+92	SB OUTSIDE RADIUS	30.0		30.0
71+92 TO 21+17	SB OUTSIDE EDGELINE	5075.0		5075.0
174+89 TO 166+19	SB CENTERLINE (DBL)	870.0	1740.0	
166+19 TO 138+10	SB INSIDE EDGELINE	2809.0	2809.0	
138+10	SB INSIDE RADIUS		87.6	
137+02	SB INSIDE RADIUS		71.2	
137+02 TO 127+75	SB INSIDE EDGELINE	927.0	927.0	
127+75	SB INSIDE RADIUS		71.9	
126+82	SB INSIDE RADIUS		73.3	
126+82 TO 117+00	SB INSIDE EDGELINE	982.0	982.0	
117+00	SB INSIDE RADIUS		61.9	
115+18	SB INSIDE RADIUS		104.2	
115+18 TO 96+20	SB INSIDE EDGELINE	1898.0	1898.0	
96+20	SB INSIDE RADIUS		54.9	
94+55	SB INSIDE RADIUS		104.0	
94+55 TO 85+16	SB INSIDE EDGELINE	939.0	939.0	
85+16	SB INSIDE RADIUS		32.3	
84+31	SB INSIDE RADIUS		57.9	
84+31 TO 72+64	SB INSIDE EDGELINE	1167.0	1167.0	
72+64	SB INSIDE RADIUS		59.5	
71+78	SB INSIDE RADIUS		47.7	
71+78 TO 58+89	SB INSIDE EDGELINE	1289.0	1289.0	
58+89	SB INSIDE RADIUS		58.2	
57+56	SB INSIDE RADIUS		61.7	
57+56 TO 25+40	SB INSIDE EDGELINE	3216.0	3216.0	
25+40	SB INSIDE RADIUS		66.7	
23+83	SB INSIDE RADIUS		58.9	
23+83 TO 21+17	SB INSIDE EDGELINE	266.0	266.0	
174+89 TO 137+03	NB OUTSIDE EDGELINE	3786.0		3786.0
137+03	NB OUTSIDE RADIUS	64.2		64.2
136+04	NB OUTSIDE RADIUS	54.9		54.9
136+04 TO 117+74	NB OUTSIDE EDGELINE	1830.0		1830.0
115+45 TO 96+83	NB OUTSIDE EDGELINE	1862.0		1862.0
94+56 TO 72+61	NB OUTSIDE EDGELINE	2195.0		2195.0
72+61	NB OUTSIDE RADIUS	61.4		61.4
71+47	NB OUTSIDE RADIUS	98.4		98.4
71+47 TO 58+32	NB OUTSIDE EDGELINE	1315.0		1315.0
58+32	NB OUTSIDE RADIUS	86.7		86.7
57+15	NB OUTSIDE RADIUS	55.1		55.1
57+15 TO 25+27	NB OUTSIDE EDGELINE	3188.0		3188.0
25+27	NB OUTSIDE RADIUS	199.1		199.1
23+11	NB OUTSIDE RADIUS	145.5		145.5
23+11 TO 21+17	NB OUTSIDE EDGELINE	194.0		194.0
172+64 TO 169+23	NB INSIDE EDGELINE	341.0	341.0	
169+23 TO 137+82	NB INSIDE EDGELINE	3141.0	3141.0	
136+75 TO 127+74	NB INSIDE EDGELINE	901.0	901.0	
126+92 TO 116+55	NB INSIDE EDGELINE	1037.0	1037.0	
116+03 TO 95+77	NB INSIDE EDGELINE	2026.0	2026.0	
95+27 TO 85+22	NB INSIDE EDGELINE	1005.0	1005.0	
84+38 TO 72+65	NB INSIDE EDGELINE	1173.0	1173.0	
71+80 TO 58+73	NB INSIDE EDGELINE	1307.0	1307.0	
57+79 TO 24+83	NB INSIDE EDGELINE	3296.0	3296.0	
24+27 TO 21+17	NB INSIDE EDGELINE	310.0	310.0	
PART "B" (FAU 7706)				
21+17 TO 20+45	SB OUTSIDE EDGELINE	71.6		71.6
21+17 TO 20+45	SB INSIDE EDGELINE	71.6	71.6	
21+17 TO 20+45	NB OUTSIDE EDGELINE	71.6		71.6
21+17 TO 20+45	NB INSIDE EDGELINE	71.6	71.6	
STA EQ 20+45.38 BK = 7+16.66 AH				
7+17 TO 32+77	SB OUTSIDE EDGELINE	2560.0		2560.0

URETHANE PAVEMENT MARKINGS - LINE 5" - CONT.

LOCATION Stations	DESCRIPTION	LENGTH (FT)	YELLOW SOLID (FT)	WHITE SOLID (FT)
7+17 TO 25+69	SB INSIDE EDGELINE	1852.3	1852.3	
25+69	SB INSIDE RADIUS	15.8	15.8	
26+92	SB INSIDE RADIUS	16.9	16.9	
26+92 TO 32+77	SB INSIDE EDGELINE	584.6	584.6	
7+17 TO 25+78	NB OUTSIDE EDGELINE	1861.3		1861.3
25+78	NB OUTSIDE RADIUS	41.5		41.5
26+87	NB OUTSIDE RADIUS	30.7		30.7
26+87 TO 32+77	NB OUTSIDE EDGELINE	589.6		589.6
7+17 TO 25+69	NB INSIDE EDGELINE	1852.3	1852.3	
26+92 TO 32+77	NB INSIDE EDGELINE	584.6	584.6	
STA EQ 32+76.61 BK = 32+67.00 AH				
32+67 TO 69+18	SB OUTSIDE EDGELINE	3651.0		3651.0
69+18	SB OUTSIDE RADIUS	66.3		66.3
70+27	SB OUTSIDE RADIUS	63.0		63.0
70+27 TO 80+79	SB OUTSIDE EDGELINE	1052.2		1052.2
32+67 TO 44+96	SB INSIDE EDGELINE	1229.0	1229.0	
44+96	SB INSIDE RADIUS	35.0	35.0	
46+30	SB INSIDE RADIUS	25.0	25.0	
46+30 TO 66+82	SB INSIDE EDGELINE	2052.0	2052.0	
66+82 TO 68+19	SB INSIDE EDGELINE (DBL)	137.0	274.0	
70+08 TO 72+52	SB INSIDE EDGELINE (DBL)	244.0	488.0	
72+52 TO 80+79	SB INSIDE EDGELINE	827.2	827.2	
32+67 TO 45+21	NB OUTSIDE EDGELINE	1254.0		1254.0
45+21	NB OUTSIDE RADIUS	32.9		32.9
45+85	NB OUTSIDE RADIUS	28.2		28.2
45+85 TO 69+14	NB OUTSIDE EDGELINE	2329.0		2329.0
69+14	NB OUTSIDE RADIUS	57.9		57.9
70+16	NB OUTSIDE RADIUS	61.7		61.7
70+16 TO 80+79	NB OUTSIDE EDGELINE	1063.2		1063.2
32+67 TO 44+90	NB INSIDE EDGELINE	1223.0	1223.0	
46+25 TO 66+82	NB INSIDE EDGELINE	2057.0	2057.0	
66+82 TO 69+26	NB INSIDE EDGELINE (DBL)	244.0	488.0	
71+08 TO 72+52	NB INSIDE EDGELINE (DBL)	144.0	288.0	
72+52 TO 80+79	NB INSIDE EDGELINE	827.0	827.0	
BRIDGE OMISSION STA 80+79.18 TO STA 83+49.84				
83+50 TO 96+34	SB OUTSIDE EDGELINE	1284.2		1284.2
96+34	SB OUTSIDE RADIUS	139.5		139.5
98+10	SB OUTSIDE RADIUS	190.7		190.7
98+10 TO 135+98	SB OUTSIDE EDGELINE	3788.0		3788.0
135+98	SB OUTSIDE RADIUS	31.6		31.6
136+60	SB OUTSIDE RADIUS	35.1		35.1
136+60 TO 138+62	SB OUTSIDE EDGELINE	202.1		202.1
83+50 TO 94+17	SB INSIDE EDGELINE	1067.0	1067.0	
94+17 TO 95+60	SB INSIDE EDGELINE (DBL)	143.0	286.0	
97+58 TO 100+00	SB INSIDE EDGELINE (DBL)	242.0	484.0	
100+00 TO 110+25	SB INSIDE EDGELINE	1025.0	1025.0	
110+25	SB INSIDE RADIUS	15.2	15.2	
110+63	SB INSIDE RADIUS	15.4	15.4	
110+63 TO 136+02	SB INSIDE EDGELINE	2539.0	2539.0	
136+02	SB INSIDE RADIUS	14.0	14.0	
136+78	SB INSIDE RADIUS	14.8	14.8	
136+78 TO 138+62	SB INSIDE EDGELINE	184.0	184.0	
83+50 TO 96+37	NB OUTSIDE EDGELINE	1287.2		1287.2
96+37	NB OUTSIDE RADIUS	129.7		129.7
97+64	NB OUTSIDE RADIUS	108.2		108.2
97+64 TO 135+86	NB OUTSIDE EDGELINE	3822.0		3822.0
135+86	NB OUTSIDE RADIUS	54.9		54.9
137+01	NB OUTSIDE RADIUS	50.3		50.3
137+01 TO 138+62	NB OUTSIDE EDGELINE	161.1		161.1
83+50 TO 94+17	NB INSIDE EDGELINE	1067.2	1067.2	
94+17 TO 96+60	NB INSIDE EDGELINE (DBL)	243.0	486.0	
98+57 TO 100+00	NB INSIDE EDGELINE (DBL)	143.0	286.0	
100+00 TO 110+25	NB INSIDE EDGELINE	1025.0	1025.0	
110+63 TO 136+02	NB INSIDE EDGELINE	2539.0	2539.0	
136+78 TO 138+62	NB INSIDE EDGELINE	184.0	184.0	
STA EQ 138+62.06 BK = 138+65.00 AH				
138+65 TO 148+71	SB OUTSIDE EDGELINE	1006.0		1006.0

URETHANE PAVEMENT MARKINGS - LINE 5" - CONT.

LOCATION Stations	DESCRIPTION	LENGTH (FT)	YELLOW SOLID (FT)	WHITE SOLID (FT)
148+71	SB OUTSIDE RADIUS	64.6		64.6
149+32	SB OUTSIDE RADIUS	22.1		22.1
149+32 TO 157+42	SB OUTSIDE EDGELINE	810.4		810.4
138+65 TO 148+28	SB INSIDE EDGELINE	963.0	963.0	
148+28	SB INSIDE RADIUS	15.7	15.7	
149+09	SB INSIDE RADIUS	17.1	17.1	
149+09 TO 157+42	SB INSIDE EDGELINE	833.4	833.4	
138+65 TO 157+42	NB OUTSIDE EDGELINE	1877.4		1877.4
138+65 TO 148+28	NB INSIDE EDGELINE	963.0	963.0	
149+09 TO 157+42	NB INSIDE EDGELINE	833.4	833.4	
138+65 TO 157+42	NB OUTSIDE	1877.4		1877.4
STA EQ 157+42.40 BK = 1746+30.50 AH				
1746+31 TO 1746+69	SB OUTSIDE EDGELINE	38.5		38.5
1746+69	SB OUTSIDE RADIUS	118.7		118.7
1747+16	SB OUTSIDE RADIUS	149.8		149.8
1747+16 TO 1750+81	SB OUTSIDE EDGELINE	365.0		365.0
1750+81	SB OUTSIDE RADIUS	501.0		501.0
1753+40	SB OUTSIDE RADIUS	740.0		740.0
1753+40 TO 1757+27	SB OUTSIDE EDGELINE	387.0		387.0
1757+27	SB OUTSIDE RADIUS	15.8		15.8
1746+31 TO 1746+96	SB INSIDE EDGELINE	65.5	65.5	
1747+96	SB INSIDE RADIUS	35.0	33.2	
1747+78	SB INSIDE RADIUS	20.0	13.7	
1747+78 TO 1757+20	SB INSIDE EDGELINE	942.0	942.0	
1757+20	SB INSIDE RADIUS	40.0	40.0	
1746+31 TO 1746+79	NB OUTSIDE EDGELINE	48.5		48.5
1746+79	NB OUTSIDE RADIUS	86.4		86.4
1748+59	NB OUTSIDE RADIUS	132.3		132.3
1748+59 TO 1757+27	NB OUTSIDE EDGELINE	868.0		868.0
1757+27	NB OUTSIDE RADIUS	13.7		13.7
1746+31 TO 1746+89	NB INSIDE EDGELINE	58.5	58.5	
1747+78 TO 1757+20	NB INSIDE EDGELINE	942.0	942.0	
NICHOLSON RD NORTH	CENTER LINE (DBL)	18.0	36.0	
NICHOLSON RD SOUTH	CENTER LINE (DBL)	23.5	47.0	
UNION ST NORTH	CENTER LINE (DBL)	95.0	190.0	
UNION ST NORTH	CENTER LINE	95.0	95.0	
UNION ST SOUTH	CENTER LINE (DBL)	83.0	166.0	
UNION ST SOUTH	CENTER LINE	83.0	83.0	
	PART "A" (FAS 1773) TOTAL:	30,842	30,524	
	PART "B" (FAU 7706) TOTAL:	32,432	35,293	
	JOB TOTAL:	63,274	65,817	
	GRAND TOTAL:	129,091		

* FAS 773/ FAU 7706

FILE NAME = c:\pw_work\PWIDOT\LAUGHLINRL\d0151693\sht-schedule.dgn	USER NAME = laughlinrl	DESIGNED -	REVISED -
		DRAWN -	REVISED -
	PLOT SCALE = 100.0000 ' / IN.	CHECKED -	REVISED -
	PLOT DATE = Apr-09-2010 11:15:14AM	DATE -	REVISED -

STATE OF ILLINOIS
DEPARTMENT OF TRANSPORTATION

SCHEDULES

SCALE: | SHEET NO. OF SHEETS | STA. TO STA.

F.A. RTE.	SECTION	COUNTY	TOTAL SHEETS	SHEET NO.
*	21RS-4,22RS-5	LOGAN	31	8

CONTRACT NO. 72A44

ILLINOIS FED. AID PROJECT

URETHANE PAVEMENT MARKINGS - LINE 6"

LOCATION Stations	DESCRIPTION	LENGTH (FT)	WHITE SOLID (FT)
PART "A" (FAS 1773)			
121+89.0 TO 119+58.1	SKIP DASH (2'x6')	230.9	78.0
119+58.1 TO 116+83.9	SB LT TURNLANE	274.2	274.2
100+65.0 TO 98+41.5	SKIP DASH (2'x6')	223.5	76.0
98+41.5 TO 96+14.5	SB LT TURNLANE	227.0	227.0
90+36.0 TO 87+94.8	SKIP DASH (2'x6')	241.2	82.0
87+94.8 TO 85+13.1	SB LT TURNLANE	281.7	281.7
29+90.0 TO 27+87.1	SKIP DASH (2'x6')	202.9	68.0
27+87.1 TO 25+29.1	SB LT TURNLANE	258.0	258.0
23+50.1 TO 21+17.0	NB RT TURNLANE	233.1	233.1
PART "B" (FAU 7706)			
21+17.0 TO 20+45.4	NB RT TURNLANE	71.6	71.6
7+16.7 TO 8+43.0	SKIP DASH (2'x6')	126.3	44.0
STA EQ 20+45.38 BK = 7+16.66 AH			
66+82.0 TO 68+25.9	SKIP DASH (2'x6')	143.9	48.0
68+25.9 TO 69+25.9	SB LT TURNLANE	100.0	100.0
70+08.1 TO 71+08.1	NB LT TURNLANE	100.0	100.0
71+08.1 TO 72+51.0	SKIP DASH (2'x6')	142.9	48.0
STA EQ 32+76.61 BK = 32+67.00 AH			
BRIDGE OMISSION STA 80+79.18 TO STA 83+49.84			
92+84.0 TO 94+94.5	SKIP DASH (2'x6')	210.5	72.0
94+94.5 TO 96+34.5	SB RT TURNLANE	140.0	140.0
94+17.0 TO 95+67.0	SKIP DASH (2'x6')	150.0	50.0
95+67.0 TO 96+60.7	SB LT TURNLANE	93.7	93.7
97+58.8 TO 98+16.3	NB LT TURNLANE	57.5	57.5
98+16.3 TO 100+00.0	SKIP DASH (2'x6')	183.7	62.0
97+63.4 TO 99+03.5	NB RT TURNLANE	140.1	140.1
99+03.5 TO 101+95.0	SKIP DASH (2'x6')	291.5	98.0
STA EQ 138+62.06 BK = 138+65.00 AH			
STA EQ 157+42.40 BK = 1746+30.50 AH			
1747+80.0 TO 1753+00.0	NB LT TURNLANE	520.0	520.0
1753+00.0 TO 1754+67.0	SKIP DASH (2'x6')	167.0	56.0
1753+60.0 TO 1754+86.0	SKIP DASH (2'x6')	126.0	42.0
1754+86.0 TO 1757+36.0	SB LT TURNLANE	250.0	250.0
	PART "A" (FAS 1773) TOTAL:		1,578
	PART "B" (FAU 7706) TOTAL:		1,993
	JOB TOTAL:		3,571

* FAS 773/ FAU 7706

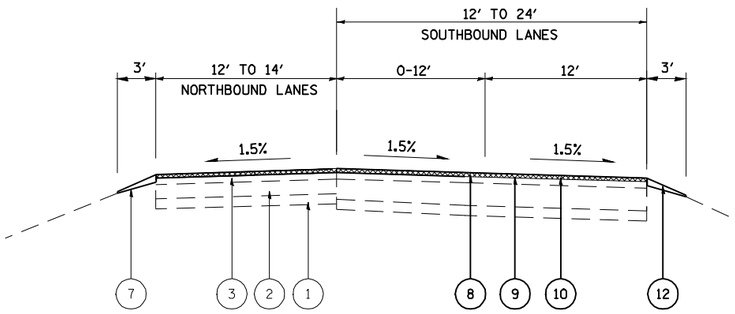

TYPICAL SECTION PART "A" FAS 1773

STA. 174+89.00 TO STA 170+74.85

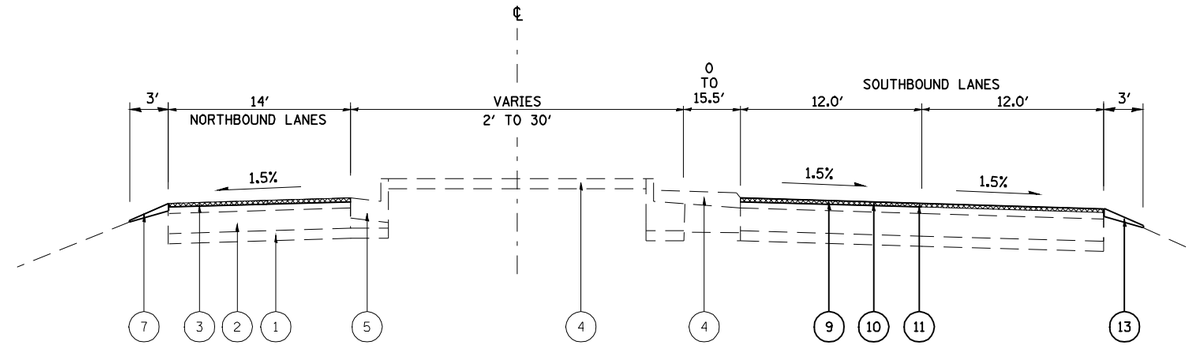

TYPICAL SECTION PART "A" FAS 1773

STA. 169+24.85 TO STA 167+23.11

LEGEND

1. EX. SUBBASE
2. EX. BASE
3. EX. HMA OVERLAY
4. EX. RAISED MEDIAN (PCC OR EARTH)
5. EX. CONC. CURB & GUTTER
6. EX. HMA SHOULDER
7. EX. AGG. SHOULDER
8. PR. HOT-MIX ASPHALT SURFACE REMOVAL, VARIABLE DEPTH
9. PR. HOT-MIX ASPHALT SURFACE REMOVAL (2 1/4")
10. PR. LEVELING BINDER (MACHINE METHOD), N70 (3/4")
11. PR. HOT-MIX ASPHALT CONCRETE SURFACE COURSE, MIX D, N70 (1 1/2")
12. PR. HMA SHOULDER 2 1/4"
13. PR. AGG SHOULDER TYPE B

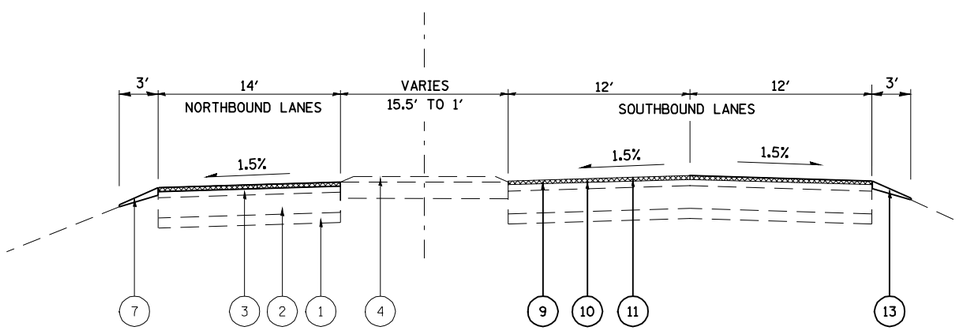

TYPICAL SECTION PART "A" FAS 1773

STA. 170+74.85 TO STA. 169+24.85

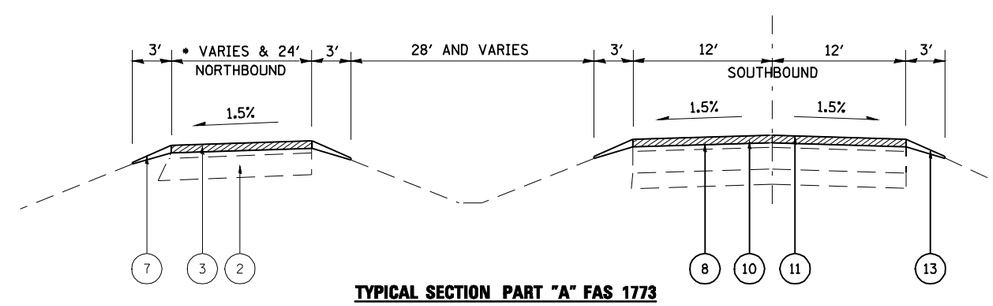

TYPICAL SECTION PART "A" FAS 1773

STA. 167+23.11 TO STA. 127+90

* - NB LANES TAPER FROM 14' TO 24'
STA 167+23 TO 163+35
NB LANES AT 24'
STA 163+35 TO 127+90

* FAS 1773/FAU 7706

FILE NAME = c:\pw_work\PWIDOT\LAUGHLINRL\d0151693\sht-typical.dgn	USER NAME = laughlinrl	DESIGNED -	REVISED -	STATE OF ILLINOIS DEPARTMENT OF TRANSPORTATION	TYPICAL SECTION	F.A. RTE.	SECTION	COUNTY	TOTAL SHEETS	SHEET NO.
	PLOT SCALE = 40.0000 ' / IN.	DRAWN -	REVISED -			*	21-RS-4 , 22RS-5	LOGAN	31	10
	PLOT DATE = Apr-09-2010 11:15:19AM	CHECKED -	REVISED -					CONTRACT NO. 72A44		
		DATE -	REVISED -		SCALE: SHEET NO. OF SHEETS STA. TO STA.		ILLINOIS	FED. AID PROJECT		

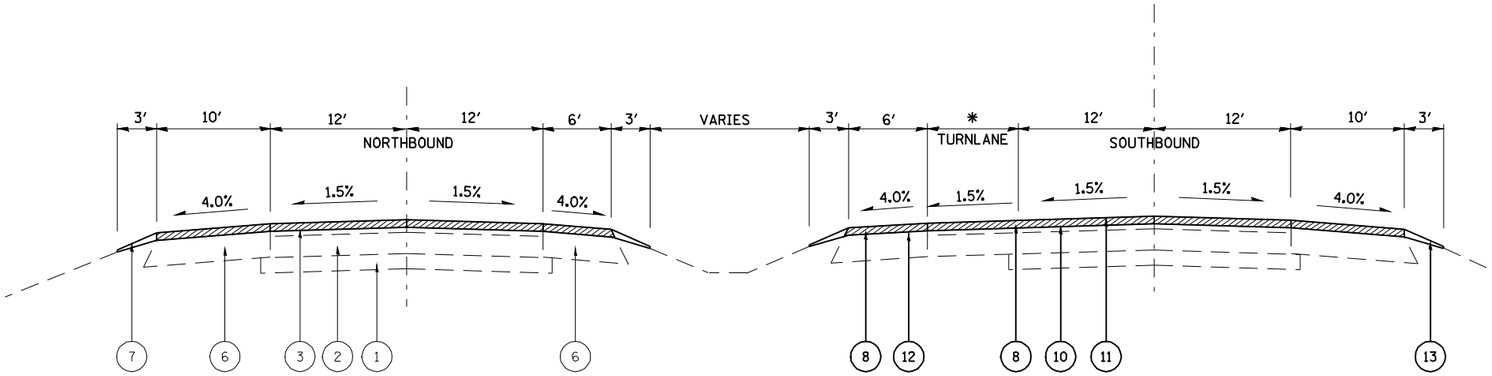

TYPICAL SECTION PART "A" FAS 1773
STA. 127+90 TO STA. 82+10

* TURNLANES
0′ - 12′ STA 122+09.66 TO 116+84.66
0′ - 12′ STA 101+29.14 TO 96+29.14
0′ - 12′ STA 90+05 TO 85+05

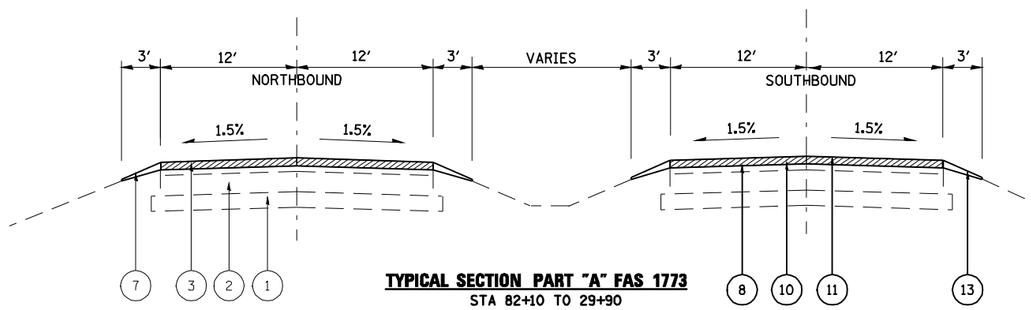

TYPICAL SECTION PART "A" FAS 1773
STA 82+10 TO 29+90

LEGEND

1. EX. SUBBASE
2. EX. BASE
3. EX. HMA OVERLAY
4. EX. RAISED MEDIAN (PCC OR EARTH)
5. EX. CONC. CURB & GUTTER
6. EX. HMA SHOULDER
7. EX. AGG. SHOULDER
8. PR. HOT-MIX ASPHALT SURFACE REMOVAL, VARIABLE DEPTH
9. PR. HOT-MIX ASPHALT SURFACE REMOVAL (2 1/4")
10. PR. LEVELING BINDER (MACHINE METHOD), N70 (3/4")
11. PR. HOT-MIX ASPHALT CONCRETE SURFACE COURSE, MIX D, N70 (1 1/2")
12. PR. HMA SHOULDER 2 1/4"
13. PR. AGG SHOULDER TYPE B

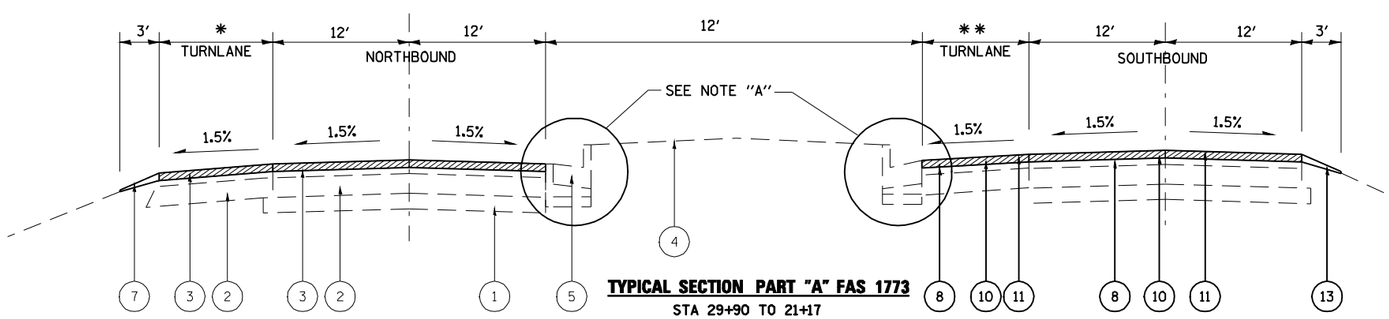

TYPICAL SECTION PART "A" FAS 1773
STA 29+90 TO 21+17

* TURNLANE 12′-0′
STA 23+90 TO 20+45.39
STA EQ 20+45.39 BK = 7+16.66 AH
STA 7+16.66 TO 9+30

TYPICAL SECTION PART "B" FAU 7706
STA 21+17 TO 20+45.39
STA EQ: 20+45.39 BK = 7+16.66 AH
STA 7+16.66 TO 9+30

** TURNLANE 0′-12′
STA 29+90 TO 24+90

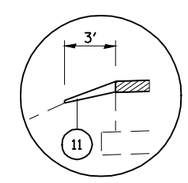

NOTE "A" (TYPICAL):
STA 23+55 TO 20+45.39
STA EQ: 20+45.39 BK = 7+16.66 AH
STA 7+16.66 TO 9+30

* FAS 1773/FAU 7706

FILE NAME = c:\pw_work\PWIDOT\LAUGHLINRL\d0151693\sht-typical.dgn	USER NAME = laughlinrl	DESIGNED -	REVISED -
		DRAWN -	REVISED -
	PLOT SCALE = 40.0000 ′ / IN.	CHECKED -	REVISED -
	PLOT DATE = Apr-09-2010 11:28:11AM	DATE -	REVISED -

STATE OF ILLINOIS
DEPARTMENT OF TRANSPORTATION

TYPICAL SECTIONS

SCALE: | SHEET NO. OF SHEETS | STA. TO STA.

F.A. RTE.	SECTION	COUNTY	TOTAL SHEETS	SHEET NO.
*	21RS-4 , 22RS-	LOGAN	31	11
		CONTRACT NO. 72A44		
	ILLINOIS FED. AID PROJECT			

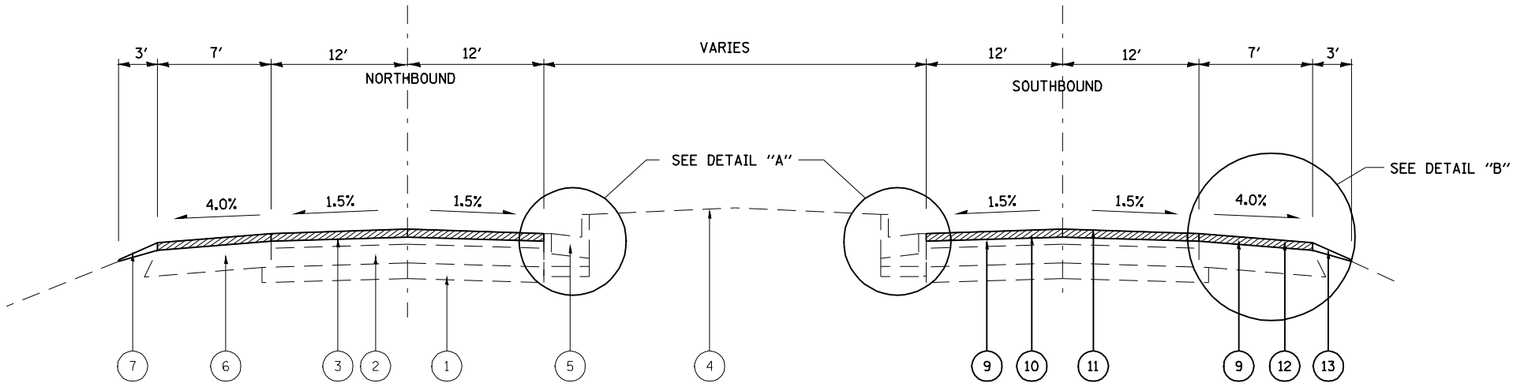

TYPICAL SECTION PART "B" FAU 7706

STA 9+30 TO 66+70
STA 72+60 TO 80+79.18
BRIDGE OMMISSION 80+79.18 TO 83+49.8
STA 83+49.8 TO 94+00
STA 100+10 TO 138+62.06
STA EQ 138+62.06 BK = 138+65 AH
STA 138+65 TO 157+42.40
STA EQ 157+42.4 BK = 1746+30.5 AH
STA 1746+30.5 TO 1747+85

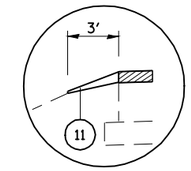

DETAIL "A" (TYPICAL):
STA 9+30 TO 11+60 (SB MEDIAN & NB MEDIAN)

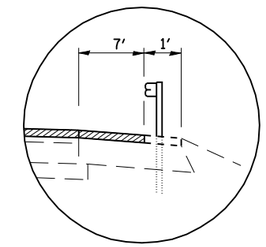

DETAIL "B" (TYPICAL):
LT STA 70+91 - 80+79
RT STA 72+40 - 80+79
LT STA 83+50 - 95+15
RT STA 83+50 - 95+15
LT STA 138+10 - 149+15
RT STA 138+65 - 148+75

NOTE:
STA 17+00 - 18+50 S.E. TRANS.
STA 18+50 - 22+75 3.0% S.E.
STA 22+75 - 27+00 S.E. TRANS. 3.0% - 8.0%
STA 27+00 - 30+25 8.0% S.E.
STA 30+25 - 34+50 S.E. TRANS.
STA 138+00 - 142+25 S.E. TRANS.
STA 142+25 - 144+81 8.0% S.E.
STA 144+81 - 149+06 S.E. TRANS.

LEGEND

1. EX. SUBBASE
2. EX. BASE
3. EX. HMA OVERLAY
4. EX. RAISED MEDIAN (PCC OR EARTH)
5. EX. CONC. CURB & GUTTER
6. EX. HMA SHOULDER
7. EX. AGG. SHOULDER
8. PR. HOT-MIX ASPHALT SURFACE REMOVAL, VARIABLE DEPTH
9. PR. HOT-MIX ASPHALT SURFACE REMOVAL (2 1/4")
10. PR. LEVELING BINDER (MACHINE METHOD), N70 (3/4")
11. PR. HOT-MIX ASPHALT CONCRETE SURFACE COURSE, MIX D, N70 (1 1/2")
12. PR. HMA SHOULDER 2 1/4"
13. PR. AGG SHOULDER TYPE B

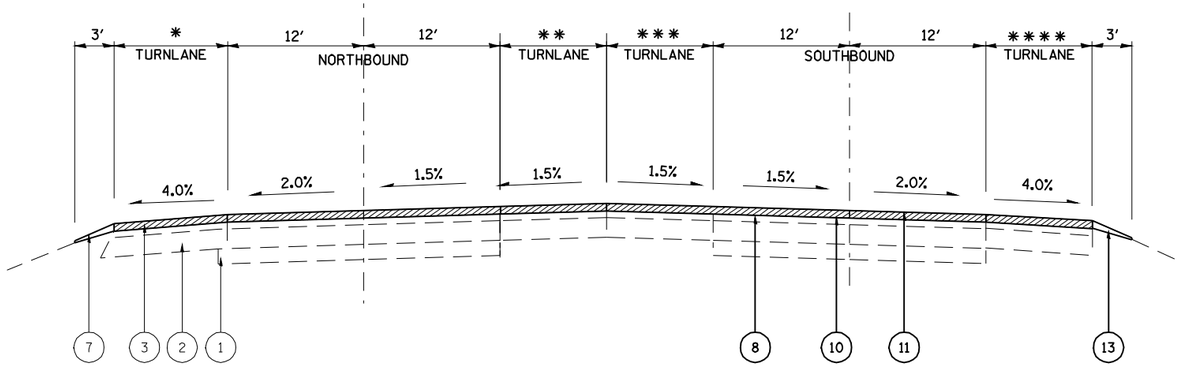

TYPICAL SECTION PART "B" FAU 7706

STA 66+70 TO 72+60
STA 94+00 TO 100+10
STA 1747+85 TO 1758+07.5

***	TURNLANE	66+70 - 68+20	0-12'
		68+20 - 69+20	12'
**	TURNLANE	70+10 - 71+10	12'
		71+10 - 72+60	12-0'
***	TURNLANE	94+00 - 95+50	0-12'
		95+50 - 96+50	12'
****	TURNLANE	93+90 - 94+90	0-12'
		94+90 - 96+50	12'
*	TURNLANE	97+60 - 99+10	12'
		99+10 - 100+1	12-0'
**	TURNLANE	97+60 - 98+60	12'
		98+60 - 100+1	12-0'
**	TURNLANE	1747+8-753+3	12'
		1753+ -755+7	12-0'
***	TURNLANE	1753+2-755+0	0-12'
		1755+ -757+6	12'

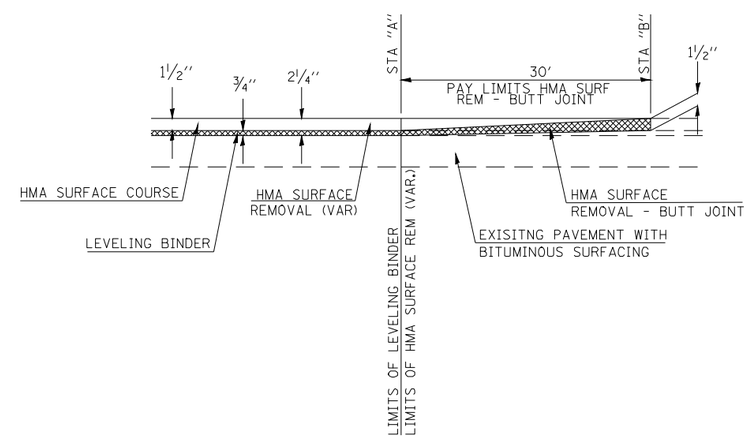

PROPOSED BUTT JOINT LIMITS

STA "A" TO STA "B"

175+55.9 TO 175+85.9
1757+77.5 TO 1758+07.5

* FAS 1773/FAU 7706

FILE NAME = c:\pw_work\PWIDOT\LAUGHLINRL\d0151693\sht-typical.dgn	USER NAME = laughlinrl	DESIGNED -	REVISED -
		DRAWN -	REVISED -
	PLOT SCALE = 40.0000 ' / IN.	CHECKED -	REVISED -
	PLOT DATE = Apr-09-2010 11:28:13AM	DATE -	REVISED -

STATE OF ILLINOIS
DEPARTMENT OF TRANSPORTATION

TYPICAL SECTIONS

SCALE: | SHEET NO. OF SHEETS | STA. TO STA.

F.A. RTE.	SECTION	COUNTY	TOTAL SHEETS	SHEET NO.
*	21RS-4, 22RS-5	LOGAN	31	12

CONTRACT NO. 72A44

ILLINOIS FED. AID PROJECT

1. PR PREFORMED PLASTIC PAVEMENT MARKING , TYPE B (INLAID), LINE 5" (30' SKIP, 10' WHITE DASH)
2. PR URETHANE PAVEMENT MARKING, LINE 5" (SOLID YELLOW)
3. PR URETHANE PAVEMENT MARKING, LINE 5" (SOLID WHITE)
4. PR URETHANE PAVEMENT MARKING, LINE 6" (SOLID WHITE)
5. PR PREFORMED PLASTIC PAVEMENT MARKING , TYPE B (INLAID), LINE 8" (SOLID WHITE)
6. PR PREFORMED PLASTIC PAVEMENT MARKING , TYPE B (INLAID), LINE 12" (SOLID YELLOW)
7. PR PREFORMED PLASTIC PAVEMENT MARKING , TYPE B (INLAID), LINE 12" (SOLID WHITE)
8. PR PREFORMED PLASTIC PAVEMENT MARKING , TYPE B (INLAID), LINE 24" (SOLID WHITE)
9. PR PREFORMED PLASTIC PAVEMENT MARKING , TYPE B (INLAID), LETTERS & SYMBOLS (SOLID WHITE)
10. PR RAISED REFLECTIVE PAVEMENT MARKERS, ONE WAY CRYSTAL
11. PR RAISED REFLECTIVE PAVEMENT MARKERS, ONE WAY AMBER
12. PR RAISED REFLECTIVE PAVEMENT MARKERS, TWO WAY AMBER

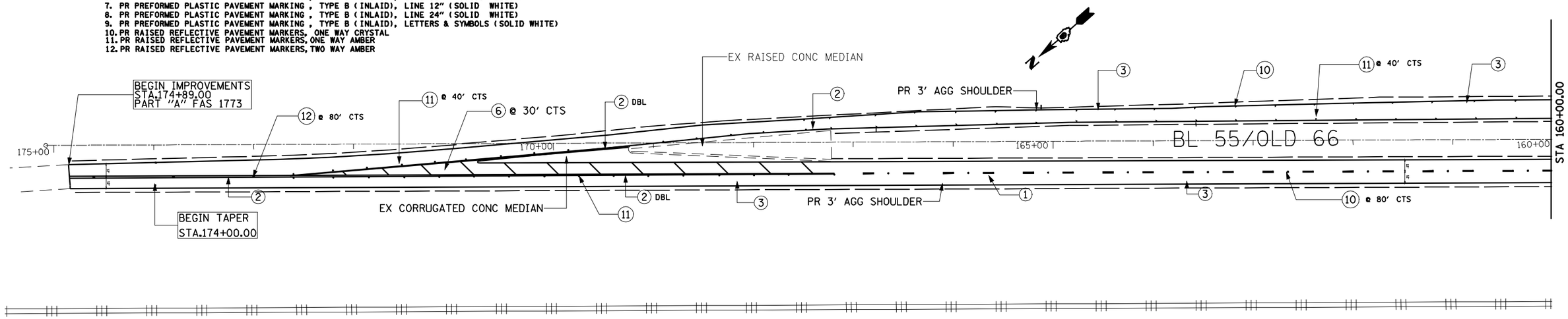

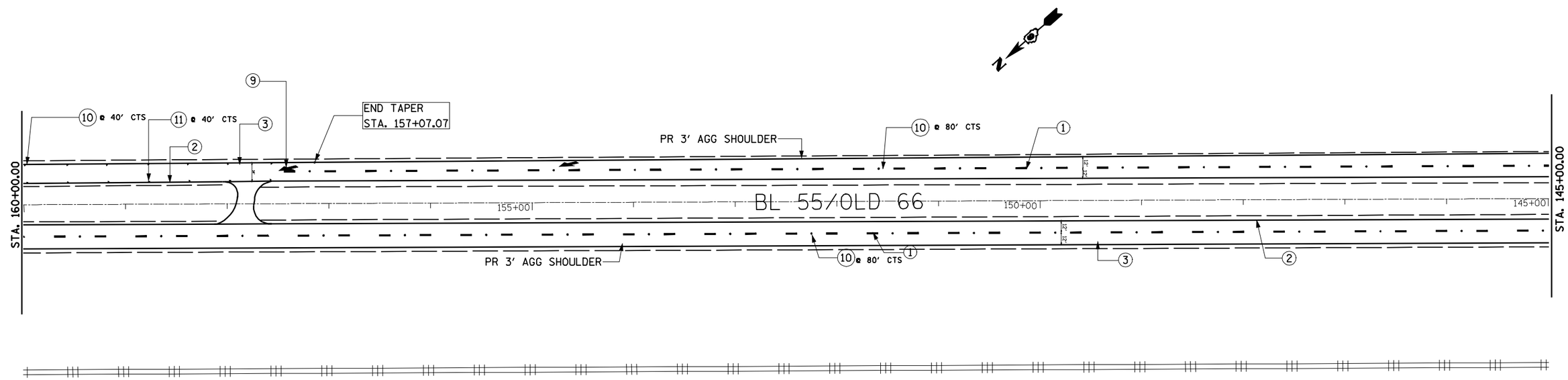

* 1773/ 7706

FILE NAME = c:\pw_work\PWIDOT\LAUGHLINRL\d0151693\sheets.dgn	USER NAME = laughlinrl	DESIGNED -	REVISED -	STATE OF ILLINOIS DEPARTMENT OF TRANSPORTATION	PLAN VIEW PART "A" FAS 1773	F.A. RTE.	SECTION	COUNTY	TOTAL SHEETS / SHEET NO.
		DRAWN -	REVISED -			*	21RS-4 22 RS-5	LOGAN	31 / 13
	PLOT SCALE = 100.0000 ' / IN.	CHECKED -	REVISED -					CONTRACT NO. 72A44	
	PLOT DATE = Apr-09-2010 11:28:18AM	DATE -	REVISED -		SCALE: 50 / SHEET NO. OF SHEETS / STA. 175+00.00 TO STA. 145+00.00		ILLINOIS	FED. AID PROJECT	

1. PR PREFORMED PLASTIC PAVEMENT MARKING , TYPE B (INLAID), LINE 5" (30' SKIP, 10' WHITE DASH)
2. PR URETHANE PAVEMENT MARKING, LINE 5" (SOLID YELLOW)
3. PR URETHANE PAVEMENT MARKING, LINE 5" (SOLID WHITE)
4. PR URETHANE PAVEMENT MARKING, LINE 6" (SOLID WHITE)
5. PR PREFORMED PLASTIC PAVEMENT MARKING , TYPE B (INLAID), LINE 8" (SOLID WHITE)
6. PR PREFORMED PLASTIC PAVEMENT MARKING , TYPE B (INLAID), LINE 12" (SOLID YELLOW)
7. PR PREFORMED PLASTIC PAVEMENT MARKING , TYPE B (INLAID), LINE 12" (SOLID WHITE)
8. PR PREFORMED PLASTIC PAVEMENT MARKING , TYPE B (INLAID), LINE 24" (SOLID WHITE)
9. PR PREFORMED PLASTIC PAVEMENT MARKING , TYPE B (INLAID), LETTERS & SYMBOLS (SOLID WHITE)
10. PR RAISED REFLECTIVE PAVEMENT MARKERS, ONE WAY CRYSTAL
11. PR RAISED REFLECTIVE PAVEMENT MARKERS, ONE WAY AMBER
12. PR RAISED REFLECTIVE PAVEMENT MARKERS, TWO WAY AMBER

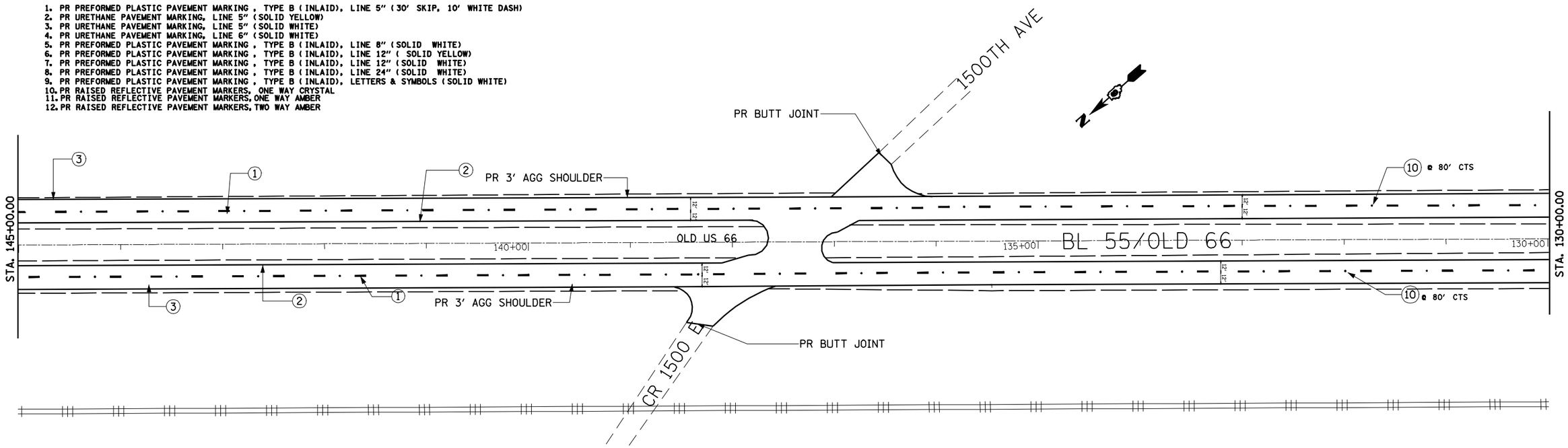

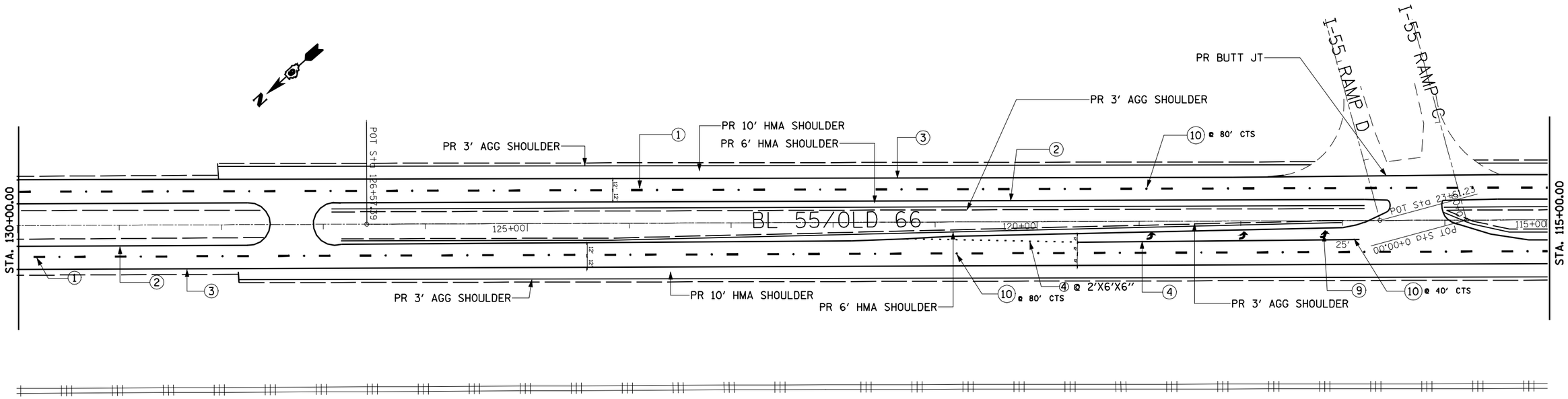

FILE NAME = c:\pw_work\PWIDOT\LAUGHLINRL\d0151693\sheets.dgn	USER NAME = laughlinrl	DESIGNED -	REVISED -	STATE OF ILLINOIS DEPARTMENT OF TRANSPORTATION	PLAN VIEW PART "A" FAS 1773
		DRAWN -	REVISED -		
	PLOT SCALE = 100.0000 ' / IN.	CHECKED -	REVISED -		
	PLOT DATE = Apr-09-2010 11:28:22AM	DATE -	REVISED -		SCALE: 50 SHEET NO. OF SHEETS STA. 145+00.00 TO STA. 115+00.00

F.A. RTE.	SECTION	COUNTY	TOTAL SHEETS	SHEET NO.
•	21RS-4 22RS-5	LOGAN	31	14
		CONTRACT NO. 72A44		
		ILLINOIS FED. AID PROJECT		

1. PR PREFORMED PLASTIC PAVEMENT MARKING , TYPE B (INLAID), LINE 5" (30' SKIP, 10' WHITE DASH)
2. PR URETHANE PAVEMENT MARKING, LINE 5" (SOLID YELLOW)
3. PR URETHANE PAVEMENT MARKING, LINE 5" (SOLID WHITE)
4. PR URETHANE PAVEMENT MARKING, LINE 6" (SOLID WHITE)
5. PR PREFORMED PLASTIC PAVEMENT MARKING , TYPE B (INLAID), LINE 8" (SOLID WHITE)
6. PR PREFORMED PLASTIC PAVEMENT MARKING , TYPE B (INLAID), LINE 12" (SOLID YELLOW)
7. PR PREFORMED PLASTIC PAVEMENT MARKING , TYPE B (INLAID), LINE 12" (SOLID WHITE)
8. PR PREFORMED PLASTIC PAVEMENT MARKING , TYPE B (INLAID), LINE 24" (SOLID WHITE)
9. PR PREFORMED PLASTIC PAVEMENT MARKING , TYPE B (INLAID), LETTERS & SYMBOLS (SOLID WHITE)
10. PR RAISED REFLECTIVE PAVEMENT MARKERS, ONE WAY CRYSTAL
11. PR RAISED REFLECTIVE PAVEMENT MARKERS, ONE WAY AMBER
12. PR RAISED REFLECTIVE PAVEMENT MARKERS, TWO WAY AMBER

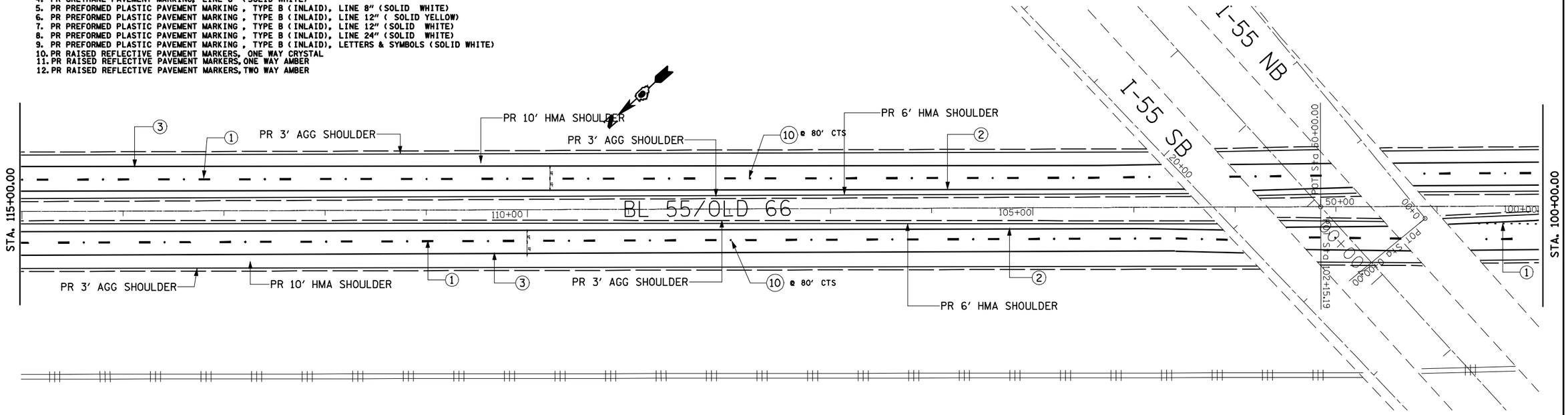

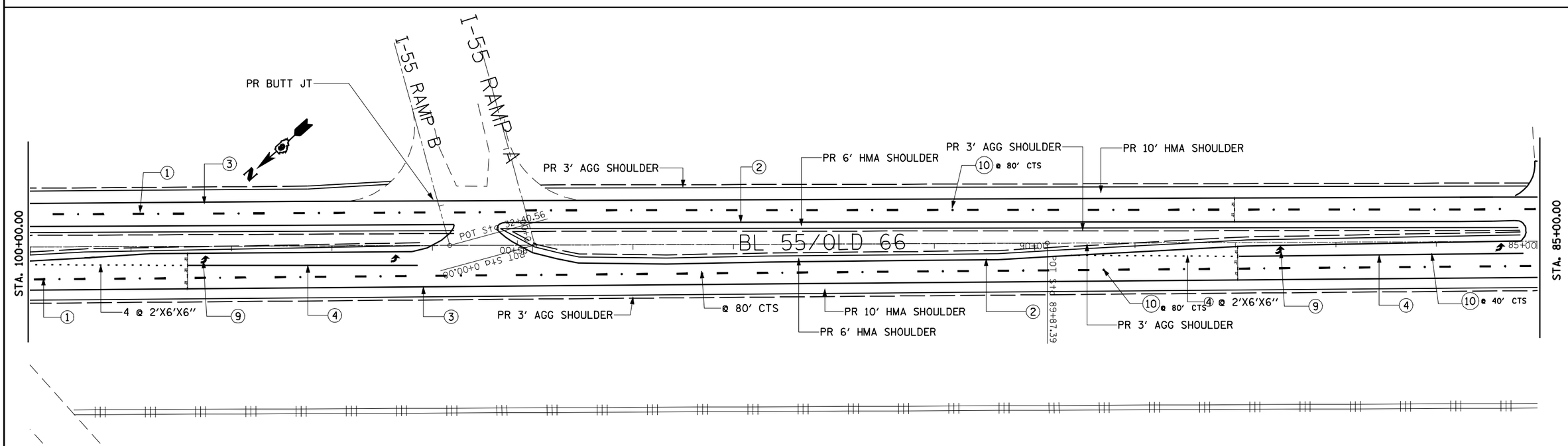

* 1773/ 7706

FILE NAME = c:\pw_work\PWIDOT\LAUGHLINRL\d0151693\sheets.dgn	USER NAME = laughlinrl	DESIGNED -	REVISED -	STATE OF ILLINOIS DEPARTMENT OF TRANSPORTATION	PLAN VIEW PART "A" FAS 1773			F.A. RTE.	SECTION	COUNTY	TOTAL SHEETS / SHEET NO.
	PLOT SCALE = 100.0000 ' / IN.	DRAWN -	REVISED -					*	21RS-4 22RS-5	LOGAN	31 / 15
	PLOT DATE = Apr-09-2010 11:28:26AM	CHECKED -	REVISED -							CONTRACT NO. 72A44	
		DATE -	REVISED -		SCALE: 50	SHEET NO. OF SHEETS	STA. 115+00.00 TO STA. 85+00.00			ILLINOIS FED. AID PROJECT	

1. PR PREFORMED PLASTIC PAVEMENT MARKING , TYPE B (INLAID), LINE 5" (30' SKIP, 10' WHITE DASH)
2. PR URETHANE PAVEMENT MARKING, LINE 5" (SOLID YELLOW)
3. PR URETHANE PAVEMENT MARKING, LINE 5" (SOLID WHITE)
4. PR URETHANE PAVEMENT MARKING, LINE 6" (SOLID WHITE)
5. PR PREFORMED PLASTIC PAVEMENT MARKING , TYPE B (INLAID), LINE 8" (SOLID WHITE)
6. PR PREFORMED PLASTIC PAVEMENT MARKING , TYPE B (INLAID), LINE 12" (SOLID YELLOW)
7. PR PREFORMED PLASTIC PAVEMENT MARKING , TYPE B (INLAID), LINE 12" (SOLID WHITE)
8. PR PREFORMED PLASTIC PAVEMENT MARKING , TYPE B (INLAID), LINE 24" (SOLID WHITE)
9. PR PREFORMED PLASTIC PAVEMENT MARKING , TYPE B (INLAID), LETTERS & SYMBOLS (SOLID WHITE)
10. PR RAISED REFLECTIVE PAVEMENT MARKERS, ONE WAY CRYSTAL
11. PR RAISED REFLECTIVE PAVEMENT MARKERS, ONE WAY AMBER
12. PR RAISED REFLECTIVE PAVEMENT MARKERS, TWO WAY AMBER

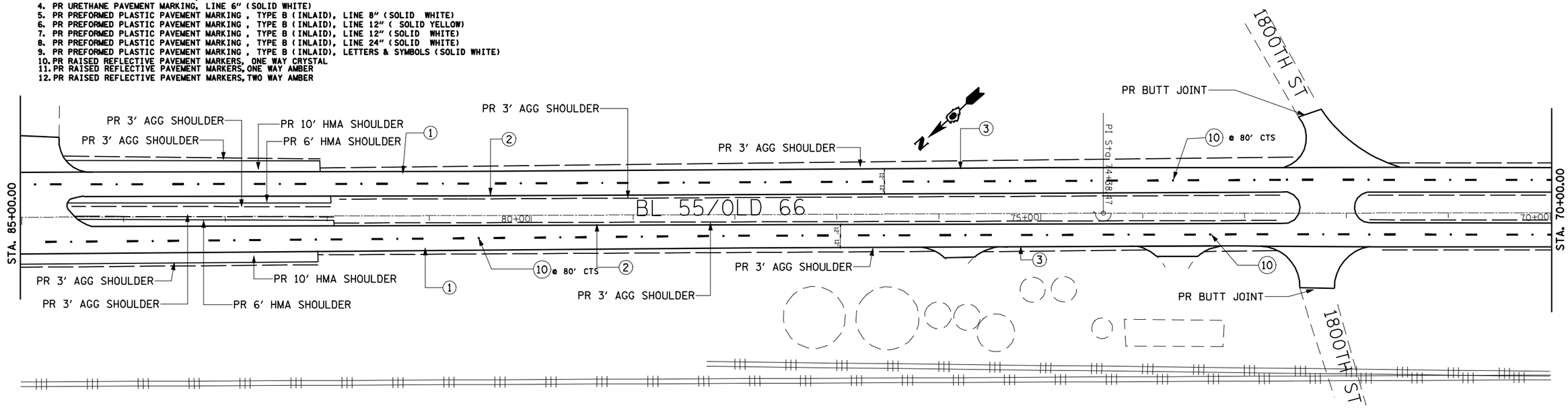

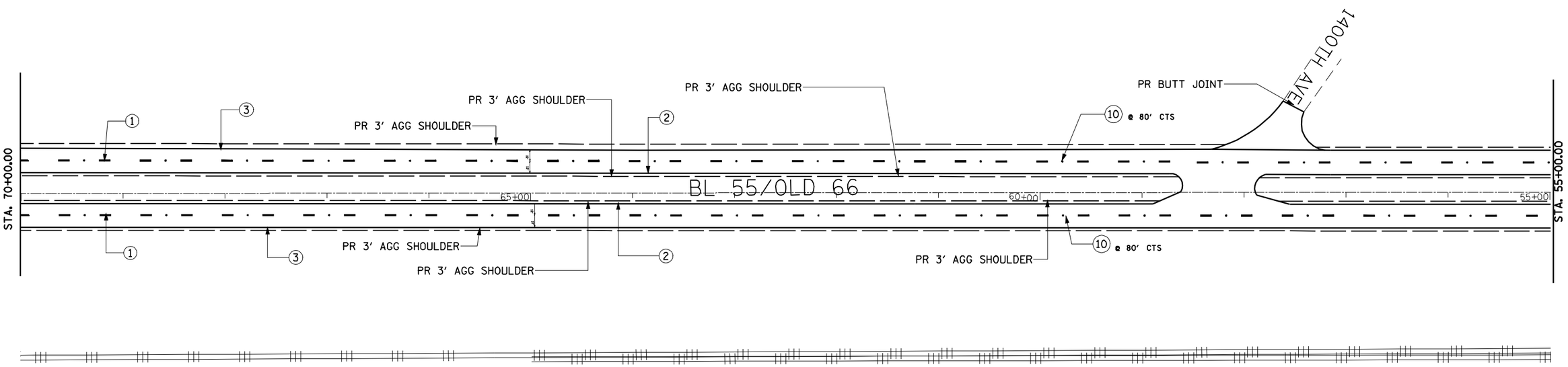

* 1773/ 7706

FILE NAME = c:\pw_work\PWIDOT\LAUGHLINRL\d0151693\sheets.dgn	USER NAME = laughlinrl	DESIGNED -	REVISED -	STATE OF ILLINOIS DEPARTMENT OF TRANSPORTATION
		DRAWN -	REVISED -	
	PLOT SCALE = 100.0000 ' / IN.	CHECKED -	REVISED -	
	PLOT DATE = Apr-09-2010 11:28:30AM	DATE -	REVISED -	

PLAN VIEW
PART "A" FAS 1773

SCALE: 50 | SHEET NO. OF SHEETS | STA. 85+00.00 TO STA. 55+00.00

F.A. RTE.	SECTION	COUNTY	TOTAL SHEETS	SHEET NO.
*	21RS-4 22RS-5	LOGAN	31	16
		CONTRACT NO. 72A44		
		ILLINOIS FED. AID PROJECT		

1. PR PREFORMED PLASTIC PAVEMENT MARKING , TYPE B (INLAID), LINE 5" (30' SKIP, 10' WHITE DASH)
2. PR URETHANE PAVEMENT MARKING, LINE 5" (SOLID YELLOW)
3. PR URETHANE PAVEMENT MARKING, LINE 5" (SOLID WHITE)
4. PR URETHANE PAVEMENT MARKING, LINE 6" (SOLID WHITE)
5. PR PREFORMED PLASTIC PAVEMENT MARKING , TYPE B (INLAID), LINE 8" (SOLID WHITE)
6. PR PREFORMED PLASTIC PAVEMENT MARKING , TYPE B (INLAID), LINE 12" (SOLID YELLOW)
7. PR PREFORMED PLASTIC PAVEMENT MARKING , TYPE B (INLAID), LINE 12" (SOLID WHITE)
8. PR PREFORMED PLASTIC PAVEMENT MARKING , TYPE B (INLAID), LINE 24" (SOLID WHITE)
9. PR PREFORMED PLASTIC PAVEMENT MARKING , TYPE B (INLAID), LETTERS & SYMBOLS (SOLID WHITE)
10. PR RAISED REFLECTIVE PAVEMENT MARKERS, ONE WAY CRYSTAL
11. PR RAISED REFLECTIVE PAVEMENT MARKERS, ONE WAY AMBER
12. PR RAISED REFLECTIVE PAVEMENT MARKERS, TWO WAY AMBER

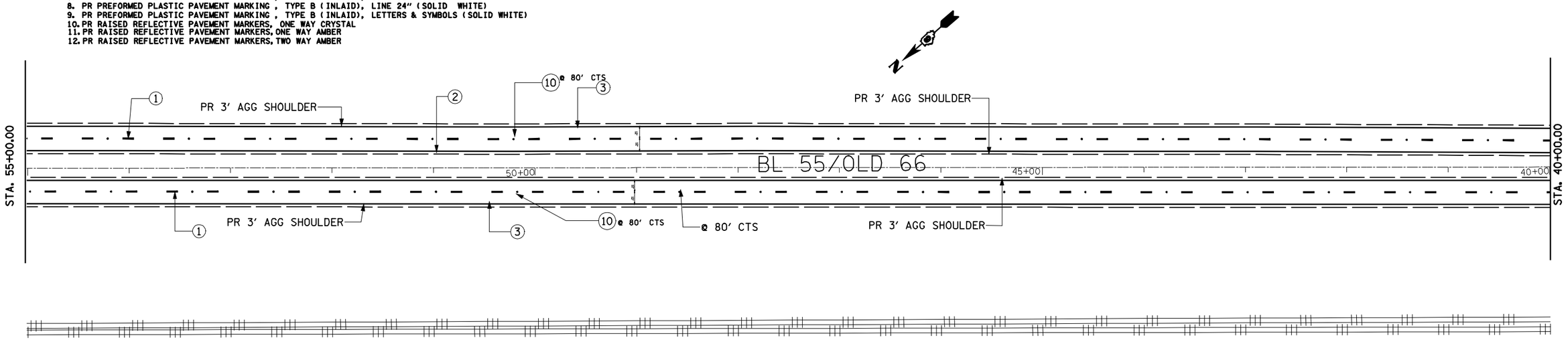

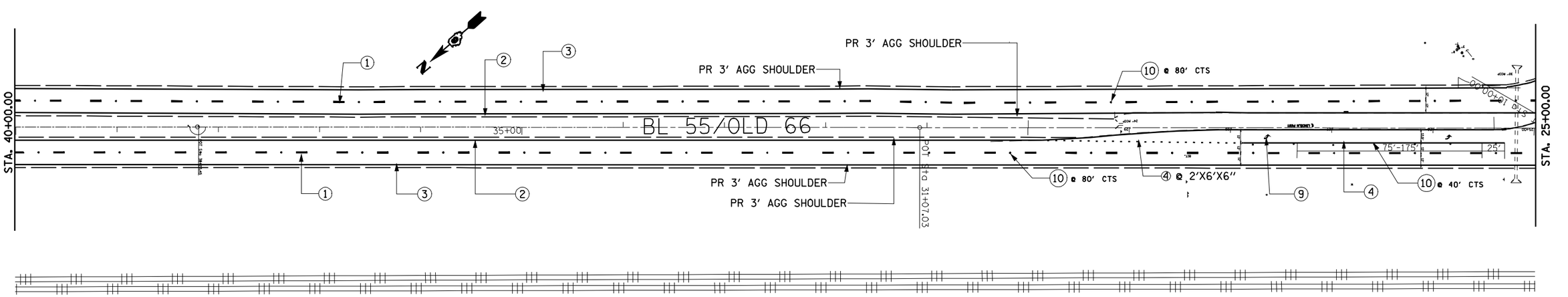

* 1773/ 7706

FILE NAME = c:\pw_work\PWIDOT\LAUGHLINRL\d0151693\sheets.dgn	USER NAME = laughlinrl	DESIGNED -	REVISED -	STATE OF ILLINOIS DEPARTMENT OF TRANSPORTATION	PLAN VIEW PART "A" FAS 1773	F.A. RTE.	SECTION	COUNTY	TOTAL SHEETS	SHEET NO.
	PLOT SCALE = 100.0000 ' / IN.	CHECKED -	REVISED -			*	21RS-4 22RS-5	LOGAN	31	17
	PLOT DATE = Apr-09-2010 11:28:34AM	DATE -	REVISED -		SCALE: 50 / SHEET NO. OF SHEETS / STA. 55+00.00 TO STA. 25+00.00			CONTRACT NO. 72A44		
								ILLINOIS FED. AID PROJECT		

1. PR PREFORMED PLASTIC PAVEMENT MARKING , TYPE B (INLAID), LINE 5" (30' SKIP, 10' WHITE DASH)
2. PR URETHANE PAVEMENT MARKING, LINE 5" (SOLID YELLOW)
3. PR URETHANE PAVEMENT MARKING, LINE 5" (SOLID WHITE)
4. PR URETHANE PAVEMENT MARKING, LINE 6" (SOLID WHITE)
5. PR PREFORMED PLASTIC PAVEMENT MARKING , TYPE B (INLAID), LINE 8" (SOLID WHITE)
6. PR PREFORMED PLASTIC PAVEMENT MARKING , TYPE B (INLAID), LINE 12" (SOLID YELLOW)
7. PR PREFORMED PLASTIC PAVEMENT MARKING , TYPE B (INLAID), LINE 12" (SOLID WHITE)
8. PR PREFORMED PLASTIC PAVEMENT MARKING , TYPE B (INLAID), LINE 24" (SOLID WHITE)
9. PR PREFORMED PLASTIC PAVEMENT MARKING , TYPE B (INLAID), LETTERS & SYMBOLS (SOLID WHITE)
10. PR RAISED REFLECTIVE PAVEMENT MARKERS, ONE WAY CRYSTAL
11. PR RAISED REFLECTIVE PAVEMENT MARKERS, ONE WAY AMBER
12. PR RAISED REFLECTIVE PAVEMENT MARKERS, TWO WAY AMBER

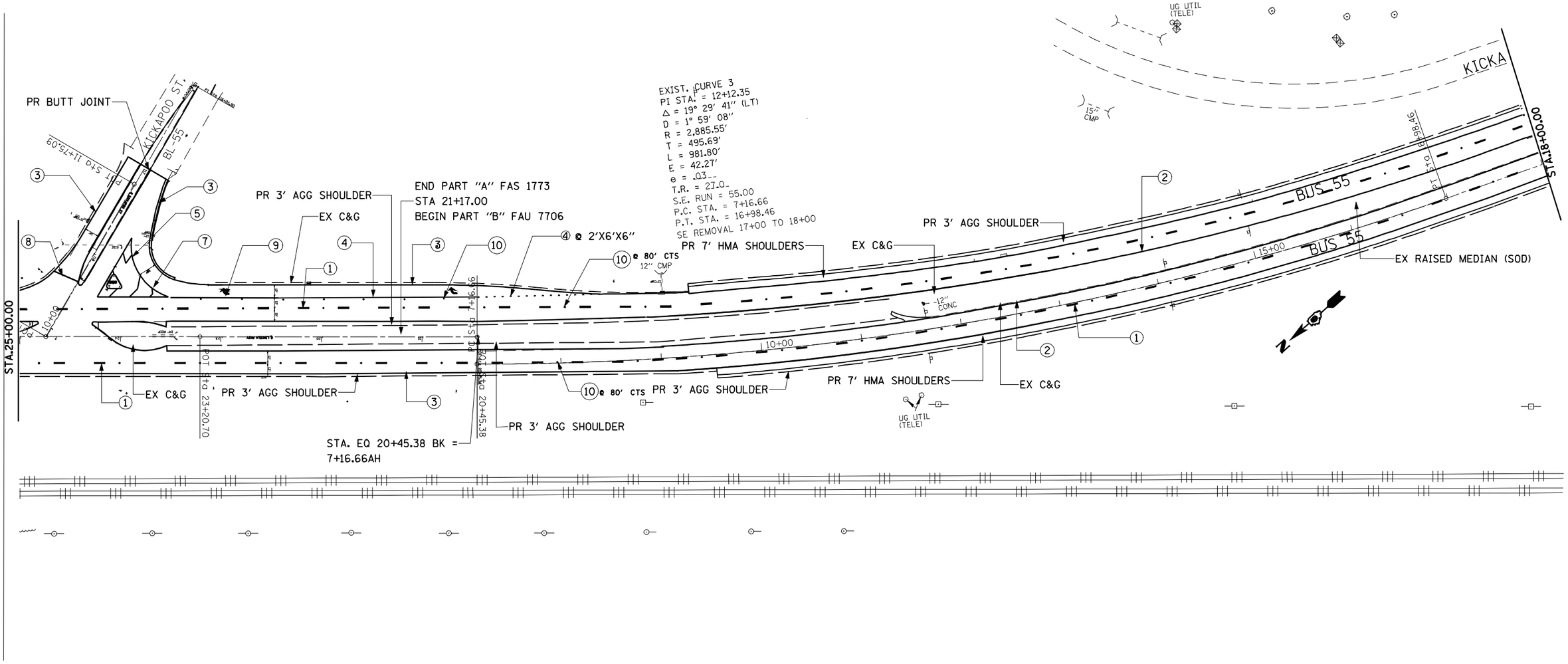

* 1773/ 7706

FILE NAME = c:\pw_work\PWIDOT\LAUGHLINRL\d0151693\sheets.dgn	USER NAME = laughlinrl	DESIGNED -	REVISED -	STATE OF ILLINOIS DEPARTMENT OF TRANSPORTATION	PLAN VIEW BEGIN PART "B" FAU 7706			F.A. RTE.	SECTION	COUNTY	TOTAL SHEETS	SHEET NO.
		DRAWN -	REVISED -					*	21RS-4 22RS-5	LOGAN	31	18
	PLOT SCALE = 100.0000 ' / IN.	CHECKED -	REVISED -							CONTRACT NO. 72A44		
	PLOT DATE = Apr-09-2010 11:28:39AM	DATE -	REVISED -		SCALE: 50	SHEET NO. OF SHEETS	STA. 25+00.00 TO STA. 18+00.00		ILLINOIS FED. AID PROJECT			

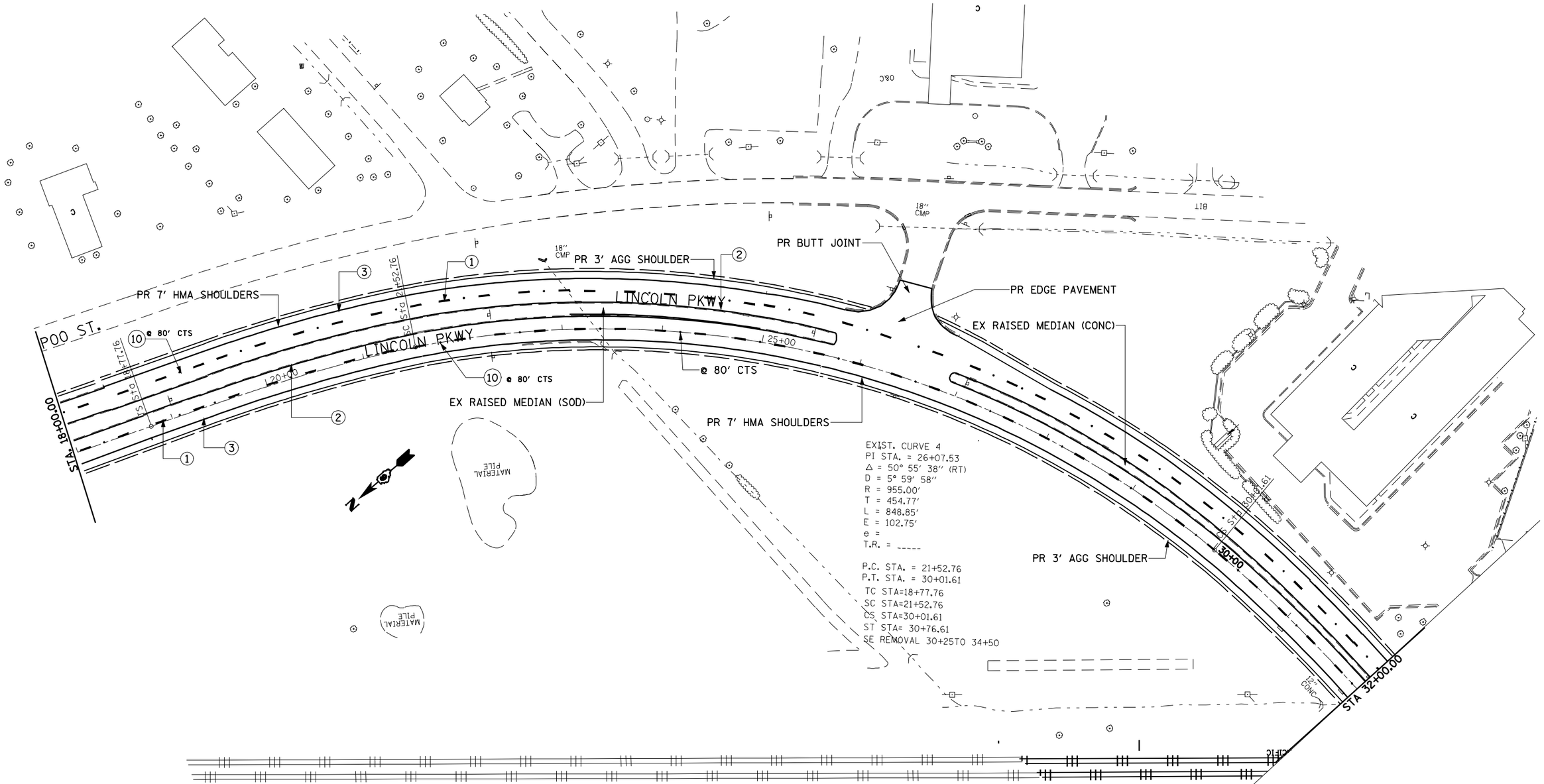

1. PR PREFORMED PLASTIC PAVEMENT MARKING , TYPE B (INLAID), LINE 5" (30' SKIP, 10' WHITE DASH)
2. PR URETHANE PAVEMENT MARKING, LINE 5" (SOLID YELLOW)
3. PR URETHANE PAVEMENT MARKING, LINE 5" (SOLID WHITE)
4. PR URETHANE PAVEMENT MARKING, LINE 6" (SOLID WHITE)
5. PR PREFORMED PLASTIC PAVEMENT MARKING , TYPE B (INLAID), LINE 8" (SOLID WHITE)
6. PR PREFORMED PLASTIC PAVEMENT MARKING , TYPE B (INLAID), LINE 12" (SOLID YELLOW)
7. PR PREFORMED PLASTIC PAVEMENT MARKING , TYPE B (INLAID), LINE 12" (SOLID WHITE)
8. PR PREFORMED PLASTIC PAVEMENT MARKING , TYPE B (INLAID), LINE 24" (SOLID WHITE)
9. PR PREFORMED PLASTIC PAVEMENT MARKING , TYPE B (INLAID), LETTERS & SYMBOLS (SOLID WHITE)
10. PR RAISED REFLECTIVE PAVEMENT MARKERS, ONE WAY CRYSTAL
11. PR RAISED REFLECTIVE PAVEMENT MARKERS, ONE WAY AMBER
12. PR RAISED REFLECTIVE PAVEMENT MARKERS, TWO WAY AMBER

* 1773/ 7706

FILE NAME = c:\pw_work\PWIDOT\LAUGHLINRL\d0151693\sheets.dgn	USER NAME = laughlinrl	DESIGNED -	REVISED -	STATE OF ILLINOIS DEPARTMENT OF TRANSPORTATION	PLAN VIEW PART "B" FAU 7706			F.A. RTE.	SECTION	COUNTY	TOTAL SHEETS	SHEET NO.
	PLOT SCALE = 100.0000 ' / IN.	DRAWN -	REVISED -					*	21RS-4 22RS-5	LOGAN	31	19
	PLOT DATE = Apr-09-2010 11:28:43AM	CHECKED -	REVISED -					CONTRACT NO. 72A44				
		DATE -	REVISED -		SCALE: 50	SHEET NO. OF SHEETS	STA. 18+00.00 TO STA. 32+00.00	ILLINOIS FED. AID PROJECT				

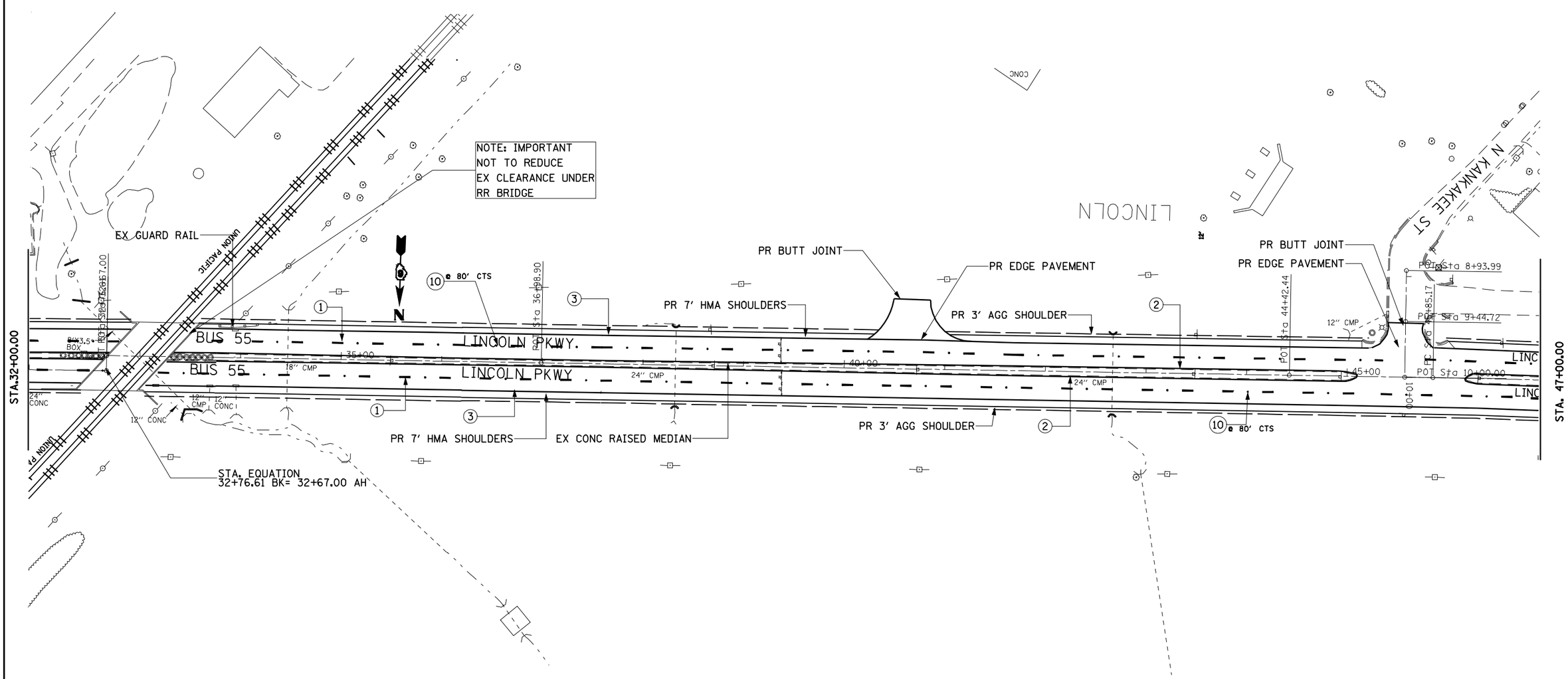

1. PR PREFORMED PLASTIC PAVEMENT MARKING , TYPE B (INLAID), LINE 5" (30' SKIP, 10' WHITE DASH)
2. PR URETHANE PAVEMENT MARKING, LINE 5" (SOLID YELLOW)
3. PR URETHANE PAVEMENT MARKING, LINE 5" (SOLID WHITE)
4. PR URETHANE PAVEMENT MARKING, LINE 6" (SOLID WHITE)
5. PR PREFORMED PLASTIC PAVEMENT MARKING , TYPE B (INLAID), LINE 8" (SOLID WHITE)
6. PR PREFORMED PLASTIC PAVEMENT MARKING , TYPE B (INLAID), LINE 12" (SOLID YELLOW)
7. PR PREFORMED PLASTIC PAVEMENT MARKING , TYPE B (INLAID), LINE 12" (SOLID WHITE)
8. PR PREFORMED PLASTIC PAVEMENT MARKING , TYPE B (INLAID), LINE 24" (SOLID WHITE)
9. PR PREFORMED PLASTIC PAVEMENT MARKING , TYPE B (INLAID), LETTERS & SYMBOLS (SOLID WHITE)
10. PR RAISED REFLECTIVE PAVEMENT MARKERS, ONE WAY CRYSTAL
11. PR RAISED REFLECTIVE PAVEMENT MARKERS, ONE WAY AMBER
12. PR RAISED REFLECTIVE PAVEMENT MARKERS, TWO WAY AMBER

• 1773/ 7706

FILE NAME = c:\pw_work\PWIDOT\LAUGHLINRL\d0151693\sheets.dgn	USER NAME = laughlinrl	DESIGNED -	REVISED -	STATE OF ILLINOIS DEPARTMENT OF TRANSPORTATION	PLAN VIEW PART "B" FAU 7706			F.A. RTE.	SECTION	COUNTY	TOTAL SHEETS	SHEET NO.
		DRAWN -	REVISED -					•	21RS-4 22RS-5	LOGAN	31	20
	PLOT SCALE = 100.0000 ' / IN.	CHECKED -	REVISED -							CONTRACT NO. 72A44		
	PLOT DATE = Apr-09-2010 11:28:47AM	DATE -	REVISED -		SCALE: 50	SHEET NO. OF SHEETS	STA. 32+00.00 TO STA. 47+00.00		ILLINOIS FED. AID PROJECT			

1. PR PREFORMED PLASTIC PAVEMENT MARKING , TYPE B (INLAID), LINE 5" (30' SKIP, 10' WHITE DASH)
2. PR URETHANE PAVEMENT MARKING, LINE 5" (SOLID YELLOW)
3. PR URETHANE PAVEMENT MARKING, LINE 5" (SOLID WHITE)
4. PR URETHANE PAVEMENT MARKING, LINE 6" (SOLID WHITE)
5. PR PREFORMED PLASTIC PAVEMENT MARKING , TYPE B (INLAID), LINE 8" (SOLID WHITE)
6. PR PREFORMED PLASTIC PAVEMENT MARKING , TYPE B (INLAID), LINE 12" (SOLID YELLOW)
7. PR PREFORMED PLASTIC PAVEMENT MARKING , TYPE B (INLAID), LINE 12" (SOLID WHITE)
8. PR PREFORMED PLASTIC PAVEMENT MARKING , TYPE B (INLAID), LINE 24" (SOLID WHITE)
9. PR PREFORMED PLASTIC PAVEMENT MARKING , TYPE B (INLAID), LETTERS & SYMBOLS (SOLID WHITE)
10. PR RAISED REFLECTIVE PAVEMENT MARKERS, ONE WAY CRYSTAL
11. PR RAISED REFLECTIVE PAVEMENT MARKERS, ONE WAY AMBER
12. PR RAISED REFLECTIVE PAVEMENT MARKERS, TWO WAY AMBER

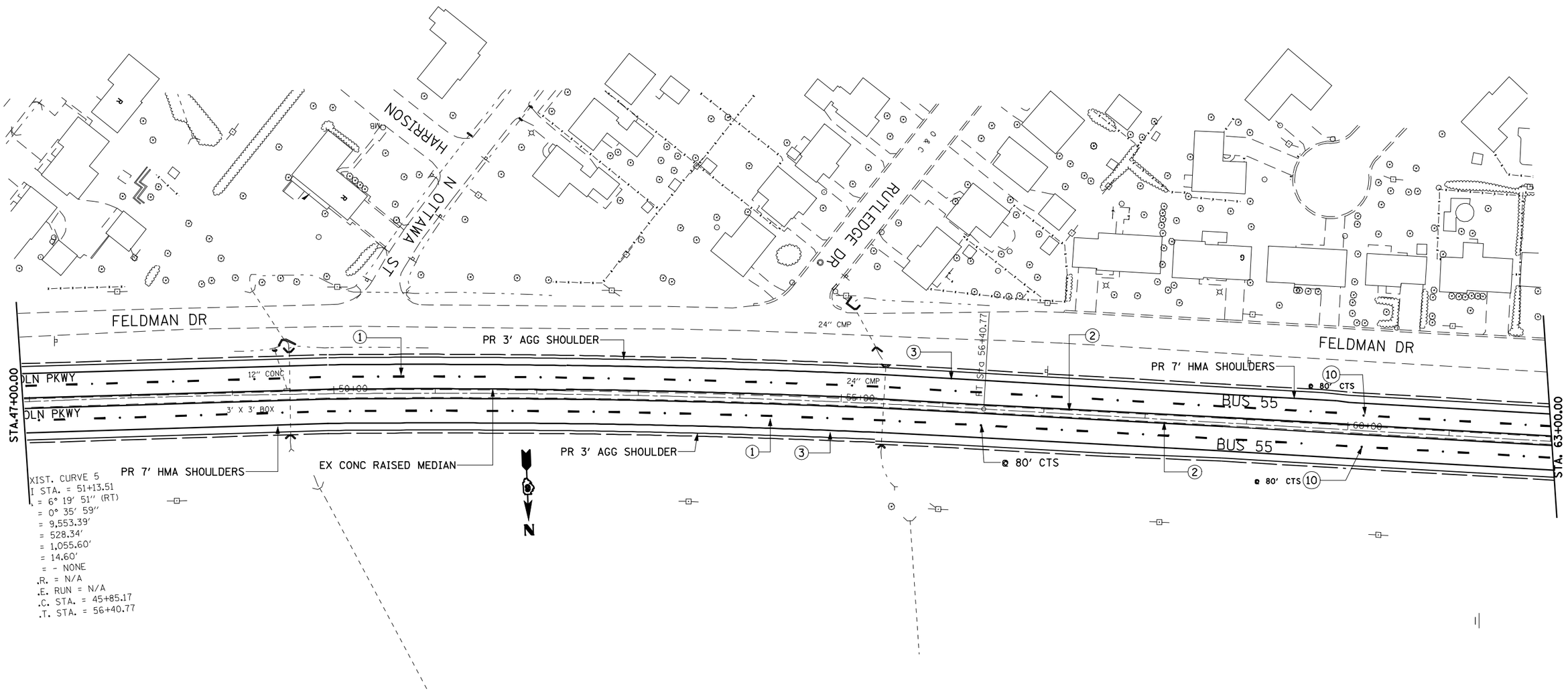

* 1773/ 7706

FILE NAME = c:\pw_work\PWIDOT\LAUGHLINRL\d0151693\sheets.dgn	USER NAME = laughlinrl	DESIGNED -	REVISED -	STATE OF ILLINOIS DEPARTMENT OF TRANSPORTATION	PLAN VIEW PART "B" FAU 7706	F.A. RTE.	SECTION	COUNTY	TOTAL SHEETS / SHEET NO.
		DRAWN -	REVISED -			*	21 RS-4 22RS-5	LOGAN	31 / 21
	PLOT SCALE = 100.0000 ' / IN.	CHECKED -	REVISED -					CONTRACT NO. 72A44	
	PLOT DATE = Apr-09-2010 11:43:45AM	DATE -	REVISED -		SCALE: 50 SHEET NO. OF SHEETS STA. 47+00.00 TO STA. 63+00.00		ILLINOIS FED. AID PROJECT		

1. PR PREFORMED PLASTIC PAVEMENT MARKING , TYPE B (INLAID), LINE 5" (30' SKIP, 10' WHITE DASH)
2. PR URETHANE PAVEMENT MARKING, LINE 5" (SOLID YELLOW)
3. PR URETHANE PAVEMENT MARKING, LINE 5" (SOLID WHITE)
4. PR URETHANE PAVEMENT MARKING, LINE 6" (SOLID WHITE)
5. PR PREFORMED PLASTIC PAVEMENT MARKING , TYPE B (INLAID), LINE 8" (SOLID WHITE)
6. PR PREFORMED PLASTIC PAVEMENT MARKING , TYPE B (INLAID), LINE 12" (SOLID YELLOW)
7. PR PREFORMED PLASTIC PAVEMENT MARKING , TYPE B (INLAID), LINE 12" (SOLID WHITE)
8. PR PREFORMED PLASTIC PAVEMENT MARKING , TYPE B (INLAID), LINE 24" (SOLID WHITE)
9. PR PREFORMED PLASTIC PAVEMENT MARKING , TYPE B (INLAID), LETTERS & SYMBOLS (SOLID WHITE)
10. PR RAISED REFLECTIVE PAVEMENT MARKERS, ONE WAY CRYSTAL
11. PR RAISED REFLECTIVE PAVEMENT MARKERS, ONE WAY AMBER
12. PR RAISED REFLECTIVE PAVEMENT MARKERS, TWO WAY AMBER

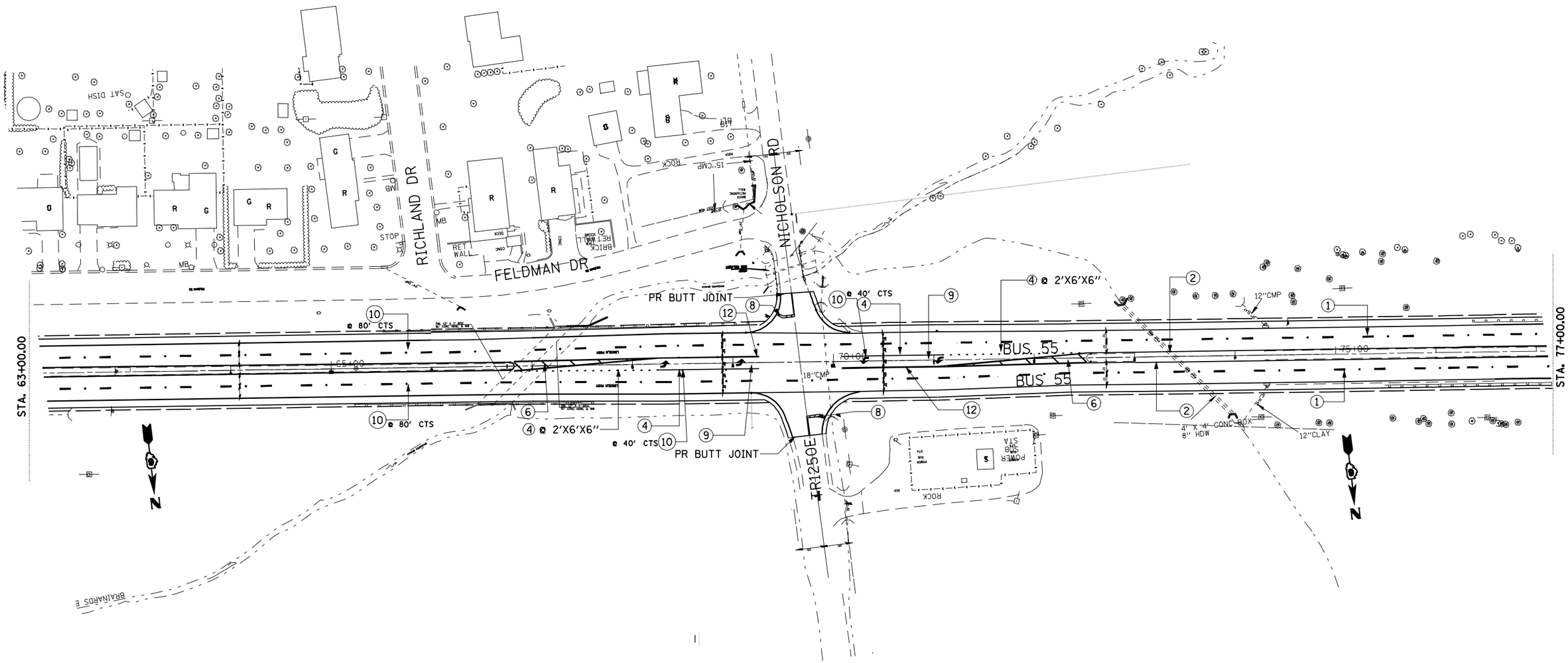

• 1773/ 7706

FILE NAME = c:\pw_work\PWIDOT\LAUGHLINRL\d0151693\sheets.dgn	USER NAME = laughlinrl	DESIGNED -	REVISED -	STATE OF ILLINOIS DEPARTMENT OF TRANSPORTATION	PLAN VIEW PART "B" FAU 7706	F.A. RTE.	SECTION	COUNTY	TOTAL SHEETS	SHEET NO.
		DRAWN -	REVISED -			•	21RS-4 22RS-5	LOGAN	31	22
	PLOT SCALE = 100.0000 ' / IN.	CHECKED -	REVISED -					CONTRACT NO. 72A44		
	PLOT DATE = Apr-09-2010 11:43:49AM	DATE -	REVISED -		SCALE: 50 SHEET NO. OF SHEETS STA. 63+00.00 TO STA. 77+00.00		ILLINOIS FED. AID PROJECT			

1. PR PREFORMED PLASTIC PAVEMENT MARKING , TYPE B (INLAID), LINE 5" (30' SKIP, 10' WHITE DASH)
2. PR URETHANE PAVEMENT MARKING, LINE 5" (SOLID YELLOW)
3. PR URETHANE PAVEMENT MARKING, LINE 5" (SOLID WHITE)
4. PR URETHANE PAVEMENT MARKING, LINE 6" (SOLID WHITE)
5. PR PREFORMED PLASTIC PAVEMENT MARKING , TYPE B (INLAID), LINE 8" (SOLID WHITE)
6. PR PREFORMED PLASTIC PAVEMENT MARKING , TYPE B (INLAID), LINE 12" (SOLID YELLOW)
7. PR PREFORMED PLASTIC PAVEMENT MARKING , TYPE B (INLAID), LINE 12" (SOLID WHITE)
8. PR PREFORMED PLASTIC PAVEMENT MARKING , TYPE B (INLAID), LINE 24" (SOLID WHITE)
9. PR PREFORMED PLASTIC PAVEMENT MARKING , TYPE B (INLAID), LETTERS & SYMBOLS (SOLID WHITE)
10. PR RAISED REFLECTIVE PAVEMENT MARKERS, ONE WAY CRYSTAL
11. PR RAISED REFLECTIVE PAVEMENT MARKERS, ONE WAY AMBER
12. PR RAISED REFLECTIVE PAVEMENT MARKERS, TWO WAY AMBER

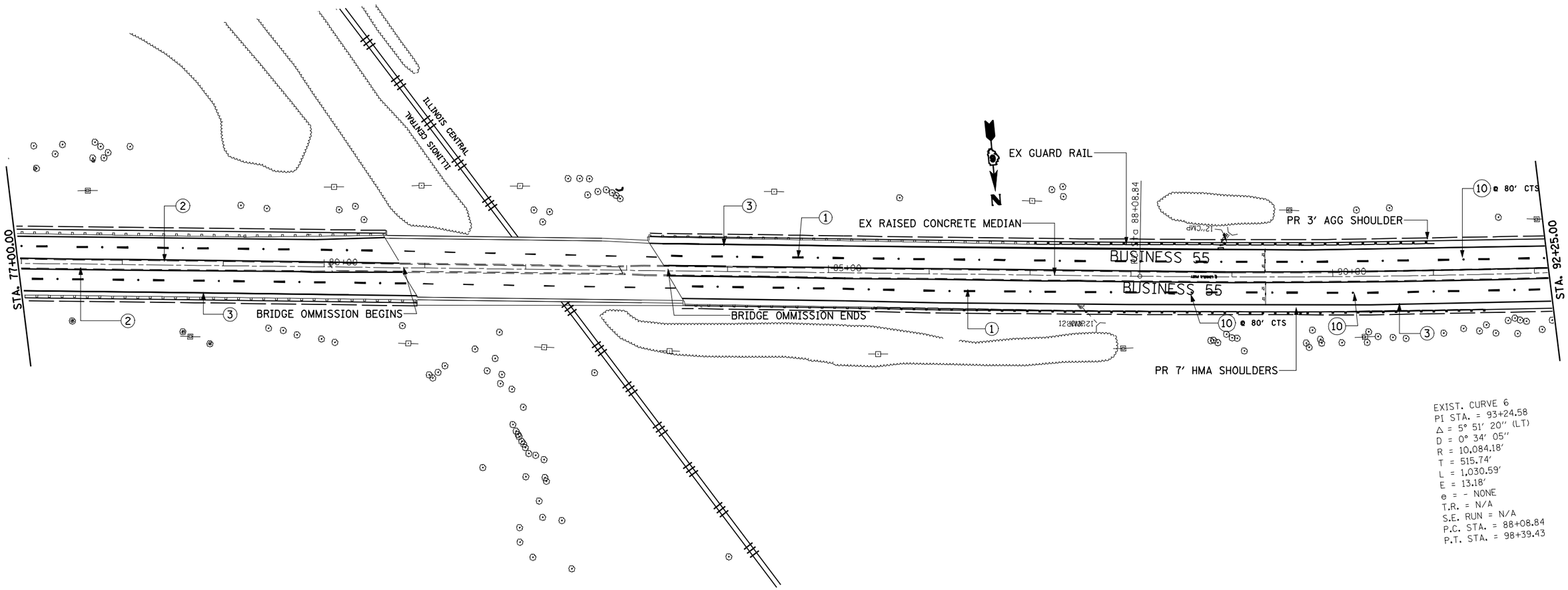

EXIST. CURVE 6
PI STA. = 93+24.58
Δ = 5° 51' 20" (LT)
D = 0° 34' 05"
R = 10,084.18'
T = 515.74'
L = 1,030.59'
E = 13.18'
e = - NONE
T.R. = N/A
S.E. RUN = N/A
P.C. STA. = 88+08.84
P.T. STA. = 98+39.43

* 1773/ 7706

FILE NAME = c:\pw_work\PWIDOT\LAUGHLINRL\d0151693\sheets.dgn	USER NAME = laughlinrl	DESIGNED -	REVISED -
		DRAWN -	REVISED -
	PLOT SCALE = 100.0000 ' / IN.	CHECKED -	REVISED -
	PLOT DATE = Apr-09-2010 11:43:54AM	DATE -	REVISED -

STATE OF ILLINOIS
DEPARTMENT OF TRANSPORTATION

PLAN VIEW
PART "B" FAU 7706

SCALE: 50 | SHEET NO. OF SHEETS | STA. 77+00.00 TO STA. 92+25.00

F.A. RTE.	SECTION	COUNTY	TOTAL SHEETS	SHEET NO.
*	21 RS-4 22RS-5	LOGAN	31	23
		CONTRACT NO. 72A44		
	ILLINOIS FED. AID PROJECT			

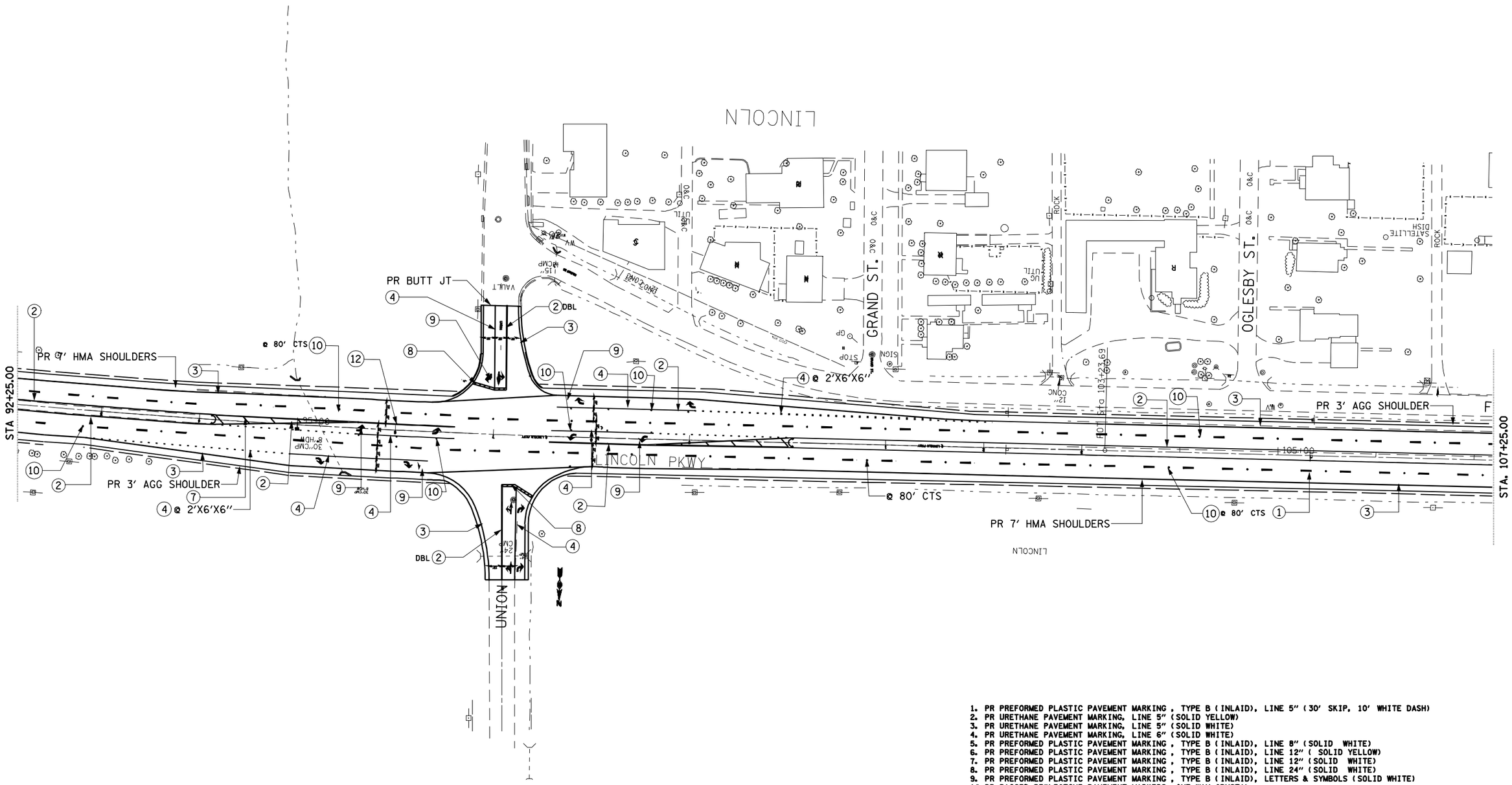

1. PR PREFORMED PLASTIC PAVEMENT MARKING , TYPE B (INLAID), LINE 5" (30' SKIP, 10' WHITE DASH)
2. PR URETHANE PAVEMENT MARKING, LINE 5" (SOLID YELLOW)
3. PR URETHANE PAVEMENT MARKING, LINE 5" (SOLID WHITE)
4. PR URETHANE PAVEMENT MARKING, LINE 6" (SOLID WHITE)
5. PR PREFORMED PLASTIC PAVEMENT MARKING , TYPE B (INLAID), LINE 8" (SOLID WHITE)
6. PR PREFORMED PLASTIC PAVEMENT MARKING , TYPE B (INLAID), LINE 12" (SOLID YELLOW)
7. PR PREFORMED PLASTIC PAVEMENT MARKING , TYPE B (INLAID), LINE 12" (SOLID WHITE)
8. PR PREFORMED PLASTIC PAVEMENT MARKING , TYPE B (INLAID), LINE 24" (SOLID WHITE)
9. PR PREFORMED PLASTIC PAVEMENT MARKING , TYPE B (INLAID), LETTERS & SYMBOLS (SOLID WHITE)
10. PR RAISED REFLECTIVE PAVEMENT MARKERS, ONE WAY CRYSTAL
11. PR RAISED REFLECTIVE PAVEMENT MARKERS, ONE WAY AMBER
12. PR RAISED REFLECTIVE PAVEMENT MARKERS, TWO WAY AMBER

• 1773/ 7706

FILE NAME = c:\pw_work\PWIDOT\LAUGHLINRL\d0151693\sheets.dgn	USER NAME = laughlinrl	DESIGNED -	REVISED -	STATE OF ILLINOIS DEPARTMENT OF TRANSPORTATION	PLAN VIEW PART "B" FAU 7706			F.A. RTE.	SECTION	COUNTY	TOTAL SHEETS	SHEET NO.
	PLOT SCALE = 100.0000 ' / IN.	DRAWN -	REVISED -					•	21RS-4 22RS-5	LOGAN	31	24
	PLOT DATE = Apr-09-2010 11:43:58AM	CHECKED -	REVISED -							CONTRACT NO. 72A44		
		DATE -	REVISED -		SCALE: 50	SHEET NO. OF SHEETS	STA. 92+25.00 TO STA. 104+25.00		ILLINOIS FED. AID PROJECT			

1. PR PREFORMED PLASTIC PAVEMENT MARKING , TYPE B (INLAID), LINE 5" (30' SKIP, 10' WHITE DASH)
2. PR URETHANE PAVEMENT MARKING, LINE 5" (SOLID YELLOW)
3. PR URETHANE PAVEMENT MARKING, LINE 5" (SOLID WHITE)
4. PR URETHANE PAVEMENT MARKING, LINE 6" (SOLID WHITE)
5. PR PREFORMED PLASTIC PAVEMENT MARKING , TYPE B (INLAID), LINE 8" (SOLID WHITE)
6. PR PREFORMED PLASTIC PAVEMENT MARKING , TYPE B (INLAID), LINE 12" (SOLID YELLOW)
7. PR PREFORMED PLASTIC PAVEMENT MARKING , TYPE B (INLAID), LINE 12" (SOLID WHITE)
8. PR PREFORMED PLASTIC PAVEMENT MARKING , TYPE B (INLAID), LINE 24" (SOLID WHITE)
9. PR PREFORMED PLASTIC PAVEMENT MARKING , TYPE B (INLAID), LETTERS & SYMBOLS (SOLID WHITE)
10. PR RAISED REFLECTIVE PAVEMENT MARKERS, ONE WAY CRYSTAL
11. PR RAISED REFLECTIVE PAVEMENT MARKERS, ONE WAY AMBER
12. PR RAISED REFLECTIVE PAVEMENT MARKERS, TWO WAY AMBER

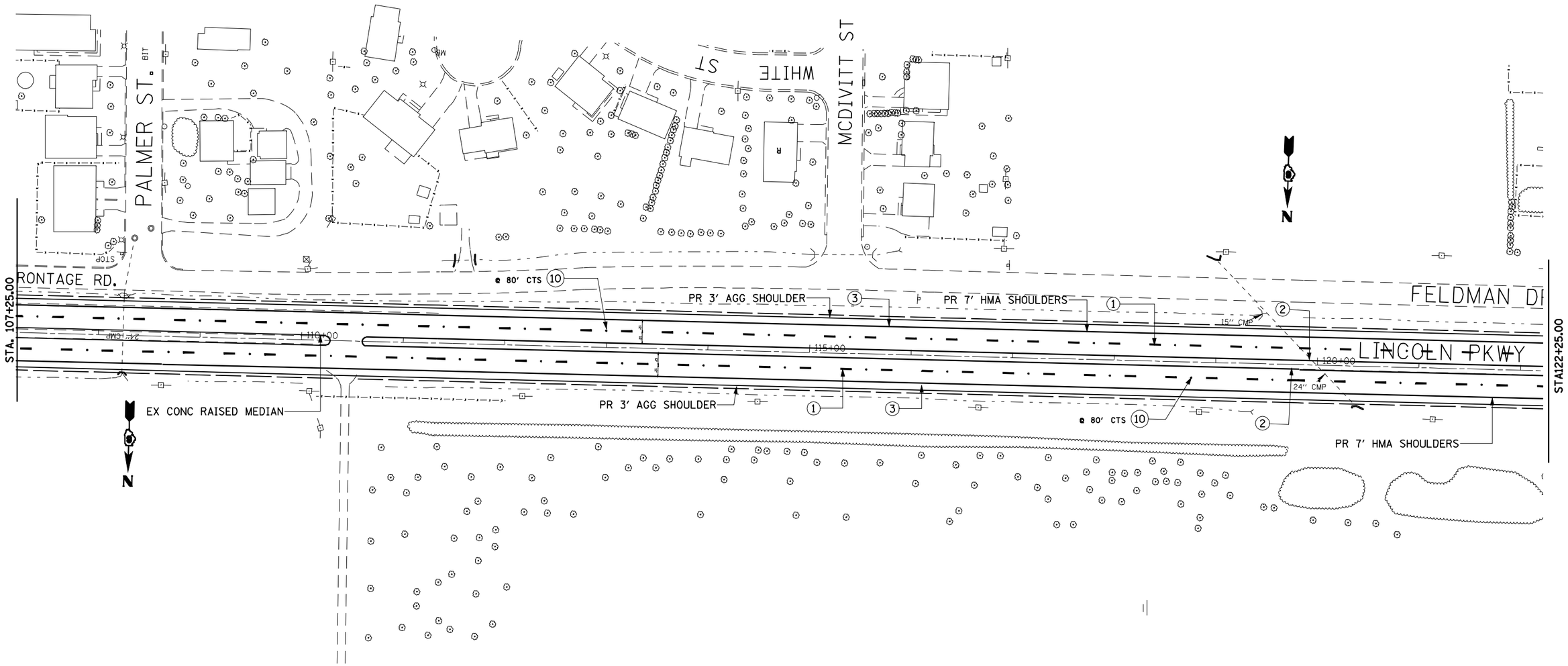

* 1773/ 7706

FILE NAME = c:\pw_work\PWIDOT\LAUGHLINRL\d0151693\sheets.dgn	USER NAME = laughlinrl	DESIGNED -	REVISED -	STATE OF ILLINOIS DEPARTMENT OF TRANSPORTATION	PLAN VIEW PART "B" FAU 7706			F.A. RTE.	SECTION	COUNTY	TOTAL SHEETS	SHEET NO.
	PLOT SCALE = 100.0000 ' / IN.	CHECKED -	REVISED -					*	21RS-4 22RS-5	LOGAN	31	25
	PLOT DATE = Apr-09-2010 11:44:02AM	DATE -	REVISED -		SCALE: 50	SHEET NO. OF SHEETS	STA. 107+25.00 TO STA. 22+25.00			CONTRACT NO. 72A44		
									ILLINOIS FED. AID PROJECT			

1. PR PREFORMED PLASTIC PAVEMENT MARKING , TYPE B (INLAID), LINE 5" (30' SKIP, 10' WHITE DASH)
2. PR URETHANE PAVEMENT MARKING, LINE 5" (SOLID YELLOW)
3. PR URETHANE PAVEMENT MARKING, LINE 5" (SOLID WHITE)
4. PR URETHANE PAVEMENT MARKING, LINE 6" (SOLID WHITE)
5. PR PREFORMED PLASTIC PAVEMENT MARKING , TYPE B (INLAID), LINE 8" (SOLID WHITE)
6. PR PREFORMED PLASTIC PAVEMENT MARKING , TYPE B (INLAID), LINE 12" (SOLID YELLOW)
7. PR PREFORMED PLASTIC PAVEMENT MARKING , TYPE B (INLAID), LINE 12" (SOLID WHITE)
8. PR PREFORMED PLASTIC PAVEMENT MARKING , TYPE B (INLAID), LINE 24" (SOLID WHITE)
9. PR PREFORMED PLASTIC PAVEMENT MARKING , TYPE B (INLAID), LETTERS & SYMBOLS (SOLID WHITE)
10. PR RAISED REFLECTIVE PAVEMENT MARKERS, ONE WAY CRYSTAL
11. PR RAISED REFLECTIVE PAVEMENT MARKERS, ONE WAY AMBER
12. PR RAISED REFLECTIVE PAVEMENT MARKERS, TWO WAY AMBER

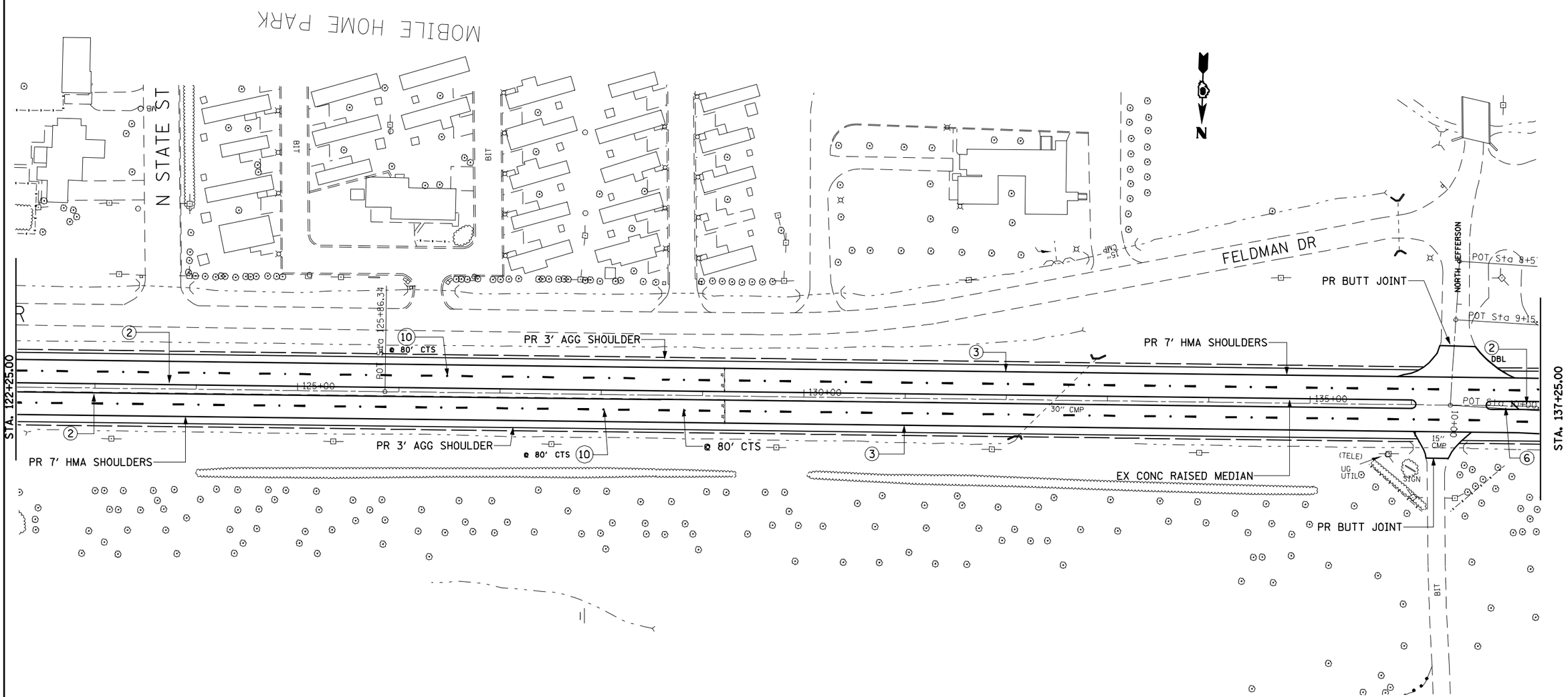

* 1773/ 7706

FILE NAME = c:\pw_work\PWIDOT\LAUGHLINRL\d0151693\sheets.dgn	USER NAME = laughlinrl	DESIGNED -	REVISED -	STATE OF ILLINOIS DEPARTMENT OF TRANSPORTATION	PLAN VIEW PART "B" FAU 7706			F.A. RTE.	SECTION	COUNTY	TOTAL SHEETS	SHEET NO.
		DRAWN -	REVISED -					*	21RS-4 22RS-5	LOGAN	31	26
	PLOT SCALE = 100.0000 ' / IN.	CHECKED -	REVISED -							CONTRACT NO. 72A44		
	PLOT DATE = Apr-09-2010 11:44:07AM	DATE -	REVISED -		SCALE: 50	SHEET NO. OF SHEETS	STA. 122+25.00 TO STA. 137+25.00		ILLINOIS FED. AID PROJECT			

1. PR PREFORMED PLASTIC PAVEMENT MARKING , TYPE B (INLAID), LINE 5" (30' SKIP, 10' WHITE DASH)
2. PR URETHANE PAVEMENT MARKING, LINE 5" (SOLID YELLOW)
3. PR URETHANE PAVEMENT MARKING, LINE 5" (SOLID WHITE)
4. PR URETHANE PAVEMENT MARKING, LINE 6" (SOLID WHITE)
5. PR PREFORMED PLASTIC PAVEMENT MARKING , TYPE B (INLAID), LINE 8" (SOLID WHITE)
6. PR PREFORMED PLASTIC PAVEMENT MARKING , TYPE B (INLAID), LINE 12" (SOLID YELLOW)
7. PR PREFORMED PLASTIC PAVEMENT MARKING , TYPE B (INLAID), LINE 12" (SOLID WHITE)
8. PR PREFORMED PLASTIC PAVEMENT MARKING , TYPE B (INLAID), LINE 24" (SOLID WHITE)
9. PR PREFORMED PLASTIC PAVEMENT MARKING , TYPE B (INLAID), LETTERS & SYMBOLS (SOLID WHITE)
10. PR RAISED REFLECTIVE PAVEMENT MARKERS, ONE WAY CRYSTAL
11. PR RAISED REFLECTIVE PAVEMENT MARKERS, ONE WAY AMBER
12. PR RAISED REFLECTIVE PAVEMENT MARKERS, TWO WAY AMBER

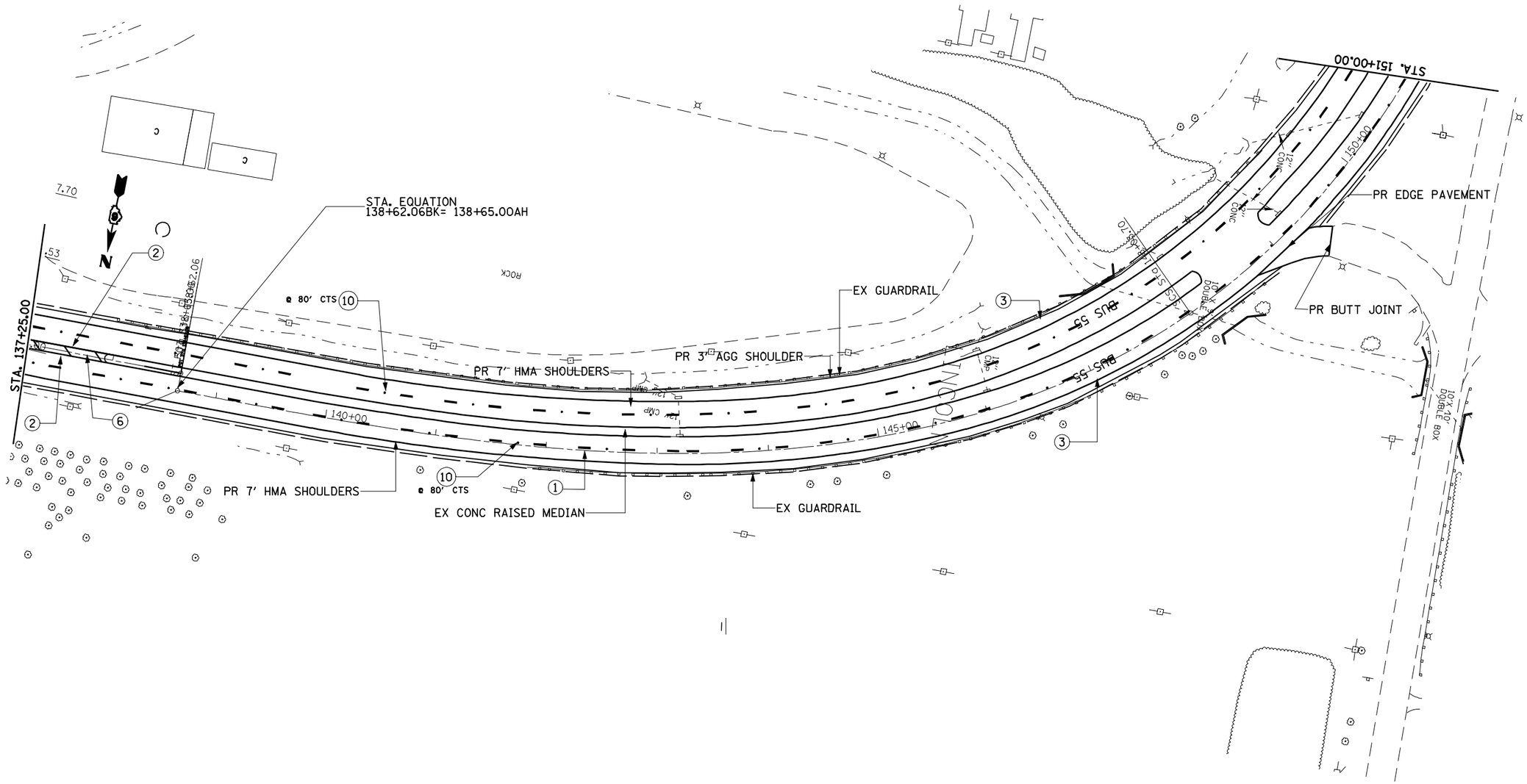

• 1773/ 7706

FILE NAME = c:\pw_work\PWIDOT\LAUGHLINRL\d0151693\sheets.dgn	USER NAME = laughlinrl	DESIGNED -	REVISED -	STATE OF ILLINOIS DEPARTMENT OF TRANSPORTATION	PLAN VIEW PART "B" FAU 7706	F.A. RTE.	SECTION	COUNTY	TOTAL SHEETS / SHEET NO.
	PLOT SCALE = 100.0000 ' / IN.	CHECKED -	REVISED -			•	21RS-4 22RS-5	LOGAN	31 / 27
	PLOT DATE = Apr-09-2010 11:44:11AM	DATE -	REVISED -		SCALE: 50 / SHEET NO. OF SHEETS / STA. 137+25.00 TO STA. 151+00.00			CONTRACT NO. 72A44	
								ILLINOIS FED. AID PROJECT	

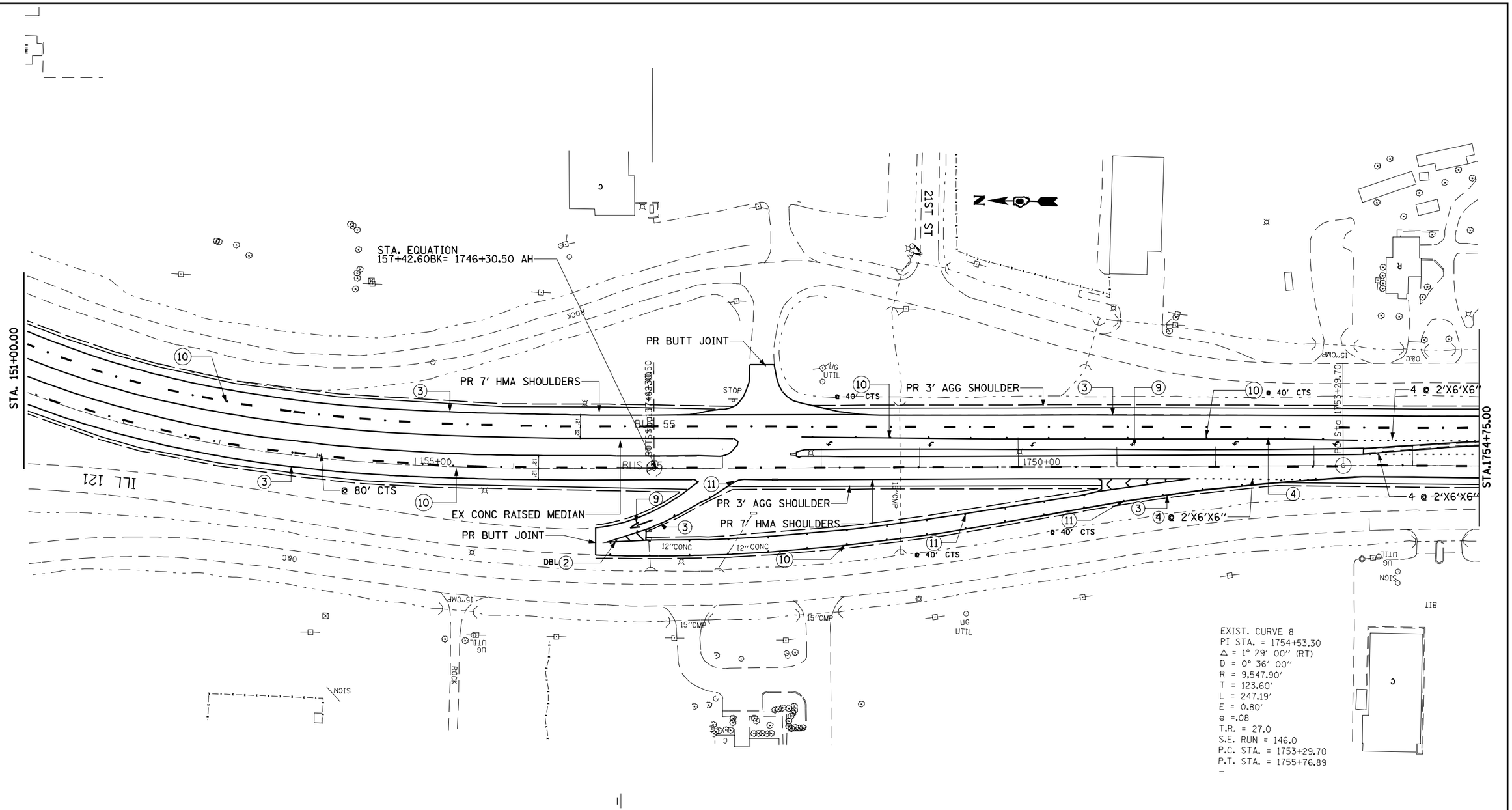

1. PR PREFORMED PLASTIC PAVEMENT MARKING , TYPE B (INLAID), LINE 5" (30' SKIP, 10' WHITE DASH)
2. PR URETHANE PAVEMENT MARKING, LINE 5" (SOLID YELLOW)
3. PR URETHANE PAVEMENT MARKING, LINE 5" (SOLID WHITE)
4. PR URETHANE PAVEMENT MARKING, LINE 6" (SOLID WHITE)
5. PR PREFORMED PLASTIC PAVEMENT MARKING , TYPE B (INLAID), LINE 8" (SOLID WHITE)
6. PR PREFORMED PLASTIC PAVEMENT MARKING , TYPE B (INLAID), LINE 12" (SOLID YELLOW)
7. PR PREFORMED PLASTIC PAVEMENT MARKING , TYPE B (INLAID), LINE 12" (SOLID WHITE)
8. PR PREFORMED PLASTIC PAVEMENT MARKING , TYPE B (INLAID), LINE 24" (SOLID WHITE)
9. PR PREFORMED PLASTIC PAVEMENT MARKING , TYPE B (INLAID), LETTERS & SYMBOLS (SOLID WHITE)
10. PR RAISED REFLECTIVE PAVEMENT MARKERS, ONE WAY CRYSTAL
11. PR RAISED REFLECTIVE PAVEMENT MARKERS, ONE WAY AMBER
12. PR RAISED REFLECTIVE PAVEMENT MARKERS, TWO WAY AMBER

* 1773/ 7706

FILE NAME = c:\pw_work\PWIDOT\LAUGHLINRL\d0151693\sheets.dgn	USER NAME = laughlinrl	DESIGNED -	REVISED -	STATE OF ILLINOIS DEPARTMENT OF TRANSPORTATION	PLAN VIEW PART "B" FAU 7706			F.A. RTE.	SECTION	COUNTY	TOTAL SHEETS / SHEET NO.
	PLOT SCALE = 100.0000 ' / IN.	DRAWN -	REVISED -					•	21RS-4 22RS-5	LOGAN	31 / 28
	PLOT DATE = Apr-09-2010 11:44:16AM	CHECKED -	REVISED -							CONTRACT NO. 72A44	
		DATE -	REVISED -		SCALE: 50	SHEET NO. OF SHEETS	STA. 151+00.00 TO STA. 1754+75.00		ILLINOIS FED. AID PROJECT		

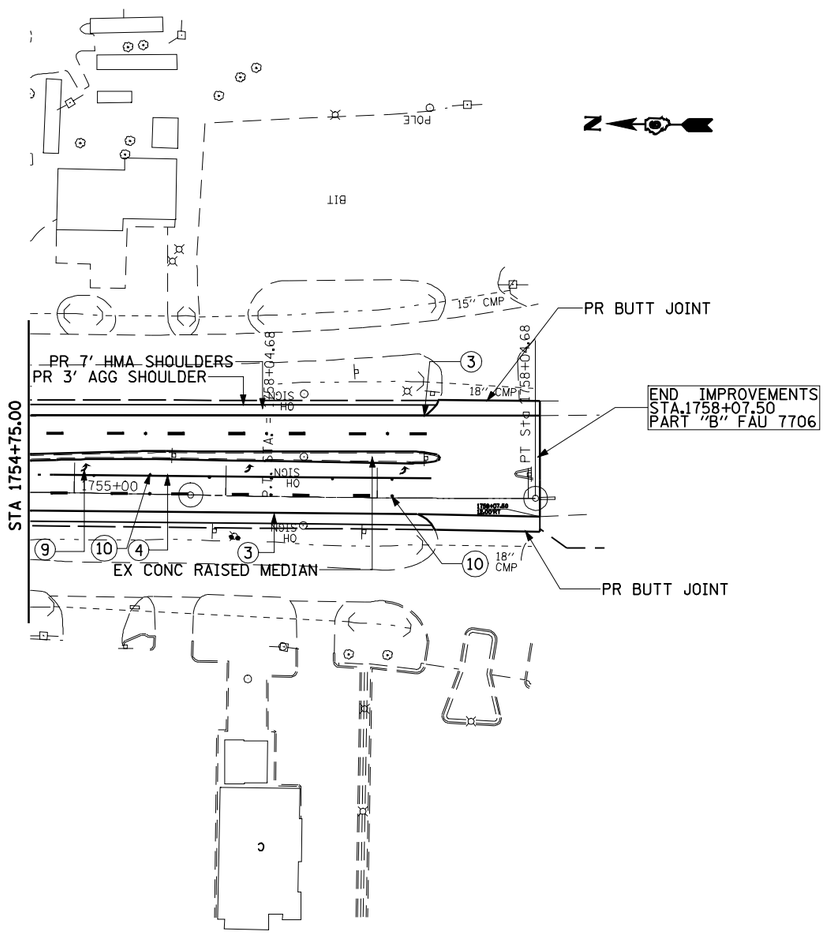

EXIST. CURVE 9
PI STA. = 1756+90.79
Δ = 1° 22' 00"
D = 0° 36' 00"
R = 9,549.78'
T = 113.90'
L = 227.79'
E = 0.68'
e = NONE
T.R. = N/A
S.E. RUN = N/A
P.C. STA. = 1755+76.89
P.T. STA. = 1758+04.68

1. PR PREFORMED PLASTIC PAVEMENT MARKING , TYPE B (INLAID), LINE 5" (30' SKIP, 10' WHITE DASH)
2. PR URETHANE PAVEMENT MARKING, LINE 5" (SOLID YELLOW)
3. PR URETHANE PAVEMENT MARKING, LINE 5" (SOLID WHITE)
4. PR URETHANE PAVEMENT MARKING, LINE 6" (SOLID WHITE)
5. PR PREFORMED PLASTIC PAVEMENT MARKING , TYPE B (INLAID), LINE 8" (SOLID WHITE)
6. PR PREFORMED PLASTIC PAVEMENT MARKING , TYPE B (INLAID), LINE 12" (SOLID YELLOW)
7. PR PREFORMED PLASTIC PAVEMENT MARKING , TYPE B (INLAID), LINE 12" (SOLID WHITE)
8. PR PREFORMED PLASTIC PAVEMENT MARKING , TYPE B (INLAID), LINE 24" (SOLID WHITE)
9. PR PREFORMED PLASTIC PAVEMENT MARKING , TYPE B (INLAID), LETTERS & SYMBOLS (SOLID WHITE)
10. PR RAISED REFLECTIVE PAVEMENT MARKERS, ONE WAY CRYSTAL
11. PR RAISED REFLECTIVE PAVEMENT MARKERS, ONE WAY AMBER
12. PR RAISED REFLECTIVE PAVEMENT MARKERS, TWO WAY AMBER

• 1773/ 7706

FILE NAME = c:\pw_work\PWIDOT\LAUGHLINRL\d0151693\sheets.dgn	USER NAME = laughlinrl	DESIGNED -	REVISED -	STATE OF ILLINOIS DEPARTMENT OF TRANSPORTATION	PLAN VIEW PART "B" FAU 7706			F.A. RTE.	SECTION	COUNTY	TOTAL SHEETS	SHEET NO.
	PLOT SCALE = 100.0000 ' / IN.	DRAWN -	REVISED -					•	21RS-4 22RS-5	LOGAN	31	29
	PLOT DATE = Apr-09-2010 11:44:20AM	CHECKED -	REVISED -							CONTRACT NO. 72A44		
		DATE -	REVISED -		SCALE: 50	SHEET NO. OF SHEETS	STA. 1774+75.00 TO STA. 1754+07.50		ILLINOIS FED. AID PROJECT			

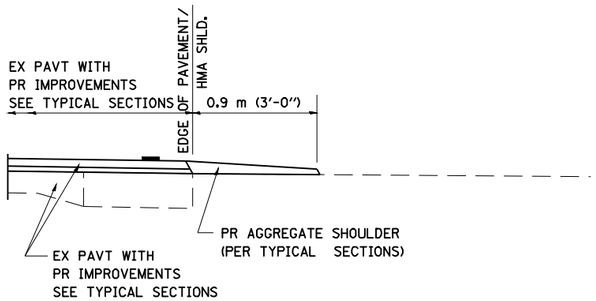

SECTION A-A FOR EX EARTH/ AGGREGATE FE

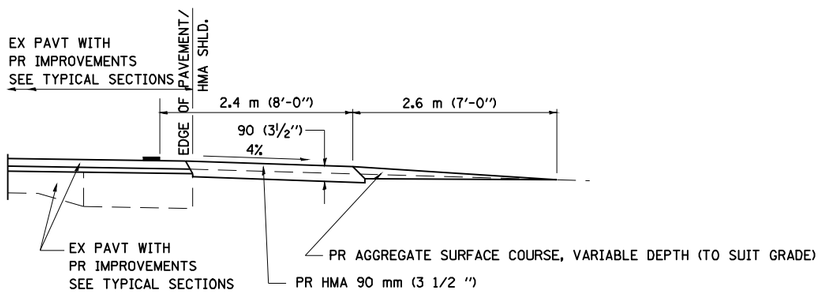

SECTION A-A FOR EX EARTH/AGGREGATE PE

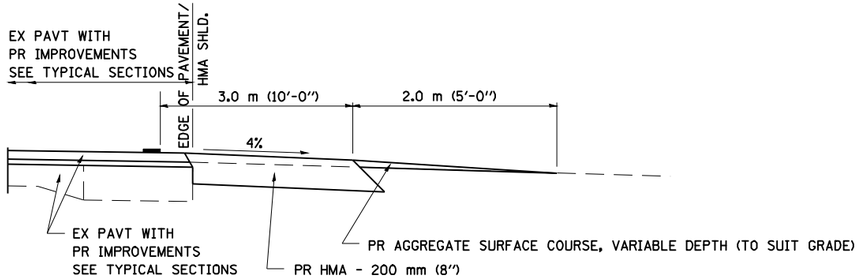

SECTION A-A FOR EX EARTH/AGGREGATE CE & SIDE ROAD

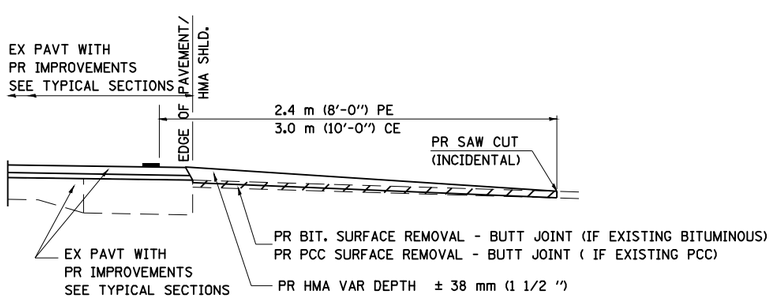

SECTION A-A FOR EX BITUMINOUS/ PC CONCRETE PE, CE & SIDE ROAD

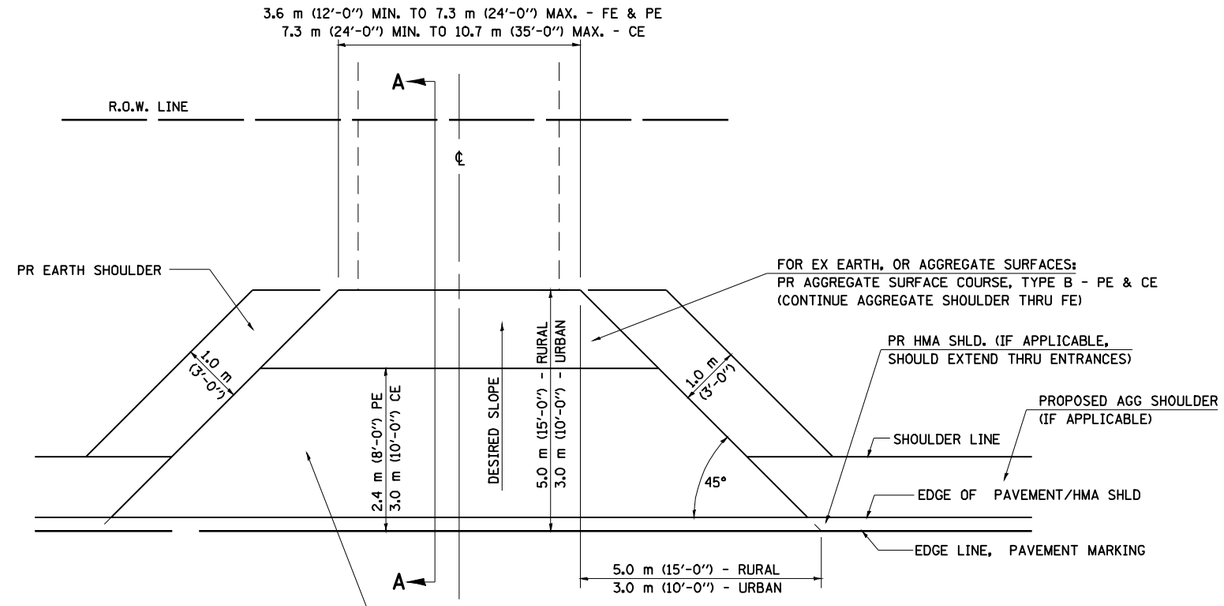

FOR EX EARTH OR AGGREGATE SURFACES:
PR BIT SURFACE REMOVAL (IF APPLICABLE)
PR AGGREGATE SHOULDER THRU - FE
PR BITUMINOUS CONCRETE 90 mm (3½") - PE
PR BITUMINOUS CONCRETE 200mm (8") - CE

FOR EX BITUMINOUS CONCRETE SURFACES:
PR BITUMINOUS SURFACE REMOVAL-BUTT JOINT

FOR EX PCC SURFACES:
PR PCC SURFACE REMOVAL-BUTT JOINT

SIDEROAD

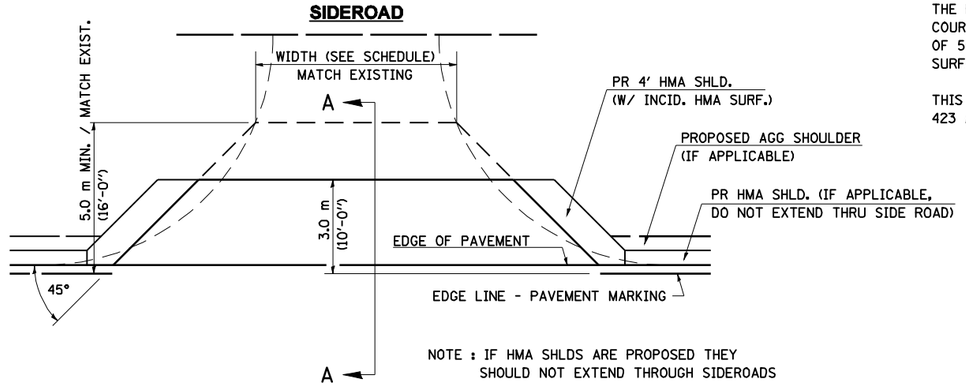

NOTE : IF HMA SHLDS ARE PROPOSED THEY
SHOULD NOT EXTEND THROUGH SIDEROADS

GENERAL NOTES:

THE RESIDENT ENGINEER WILL DETERMINE THE EXACT TYPE OF IMPROVEMENT TO BE COMPLETED FOR ALL ENTRANCES, SIDEROADS AND MAILBOX TURNOUTS ON THIS PROJECT.

THE PLAN DETAILS AND SCHEDULES SHOULD BE USED AS A GUIDE FOR THE ENGINEER TO IMPLEMENT THE FINAL DESIGN. THE ENGINEER MAY DECIDE TO SALVAGE PORTIONS OF THE EXISTING ENTRANCE PAVEMENT STRUCTURE; THEREFORE, REDUCING PAY ITEM QUANTITIES. NO ADDITIONAL PAYMENT WILL BE ALLOWED FOR THIS REDUCTION IN QUANTITIES.

ANY WORK THE ENGINEER REQUIRES WHICH IS NOT COVERED BY A PAY ITEM CONTAINED IN THE PLANS WILL BE PAID FOR IN ACCORDANCE WITH ARTICLE 109.04 OF THE STANDARD SPECIFICATIONS.

BITUMINOUS CONCRETE REQUIRED TO CONSTRUCT THE ENTRANCES SHALL BE IN ACCORDANCE WITH THE APPLICABLE PORTIONS OF SECTION 406 AND 408 OF THE STANDARD SPECIFICATIONS AND AS DIRECTED BY THE ENGINEER.

WHEN THE BITUMINOUS CONCRETE PROPOSED FOR THE IMPROVEMENT IS THICKER THAN 75 mm (3 INCHES) AND REQUIRE PLACEMENT IN MORE THAN ONE LIFT. THE BOTTOM LIFT(S) SHALL MEET THE REQUIREMENTS OF BITUMINOUS BASE COURSE IN SECTION 406 OF THE STANDARD SPECIFICATIONS AND THE TOP LIFT OF 50 mm (2 INCHES) SHALL MEET THE REQUIREMENTS OF BITUMINOUS CONCRETE SURFACE COURSE, SUPERPAVE.

THIS WORK WILL BE PAID FOR IN ACCORDANCE WITH SECTIONS 351, 358, 408, 423 AND 440 OF THE STANDARD SPECIFICATIONS.

ALL DIMENSIONS ARE IN MILLIMETERS (INCHES)
UNLESS OTHERWISE SHOWN.

FILE NAME = c:\pw_work\PWIDOT\LAUGHLINRL\d0151693\ent_ppp.dgn	USER NAME = laughlinrl	DESIGNED -	REVISED - 2/19/03 JCN	STATE OF ILLINOIS DEPARTMENT OF TRANSPORTATION	DIST. 6 DETAILS FOR RURAL/URBAN ENT., MAILBOX TURNOUT & SIDEROADS W/O CONC. GUTTER (3P-PROJ.)	F.A. RTE.	SECTION	COUNTY	TOTAL SHEETS	SHEET NO.
		DRAWN - CADD	REVISED - 4/01/04 JCN			•	21RS-4 22RS-5	LOGAN	31	30
ENT PPP.DGN	PLOT SCALE = 40.000 ' / IN.	CHECKED - JCN	REVISED -					CONTRACT NO. 72A44		
	PLOT DATE = Apr-09-2010 11:44:22AM	DATE - FEBRUARY 23, 1999	REVISED -		SCALE: SHEET NO. 1 OF 2 SHEETS STA. TO STA.	FED. ROAD DIST. NO.	ILLINOIS	FED. AID PROJECT		

DETAILS OF MAILBOX TURNOUTS

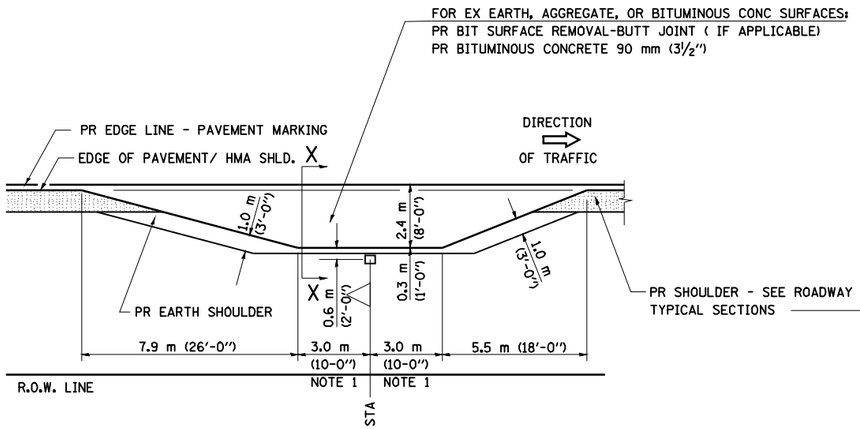

PLAN - MAILBOX TURNOUTS

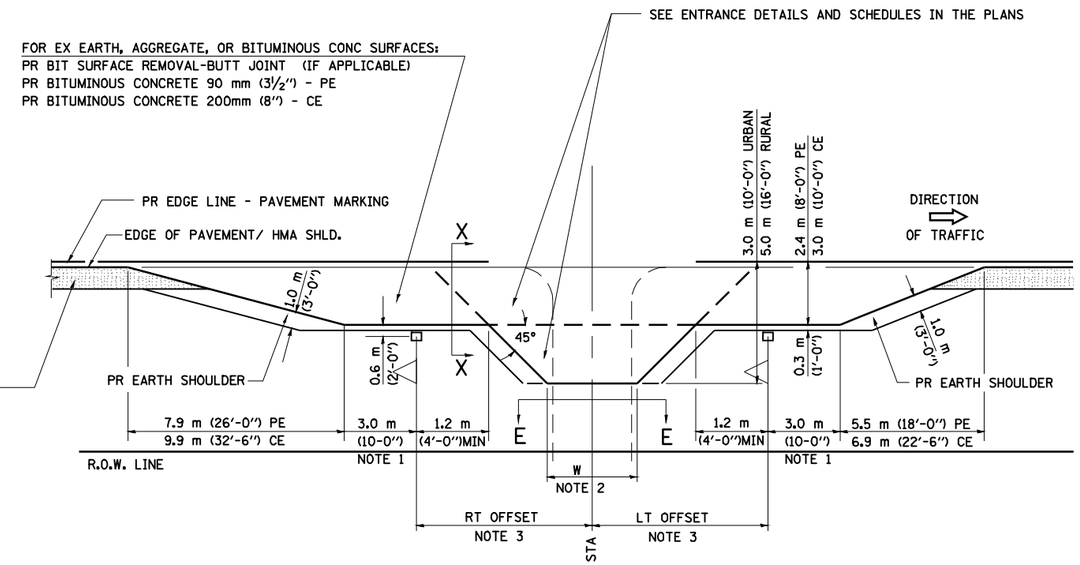

PLAN - COMBINED MAILBOX TURNOUT WITH TRAILING OR LEADING ENTRANCE

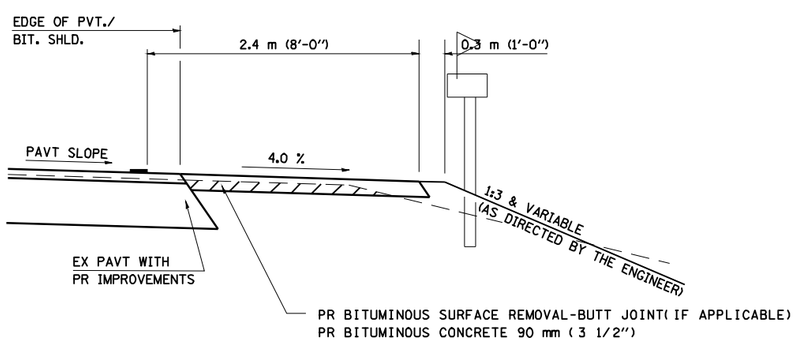

SECTION X-X THRU MAILBOX TURNOUT
ALSO APPLIES TO MAILBOX TURNOUTS COMBINED WITH EX EARTH, AGGREGATE, OR BITUMINOUS PE & FE

(DETAIL APPLIES WHEN M.B. TURNOUT DOES NOT EXIST. IF EXISTING, TREAT SAME AS ENTRANCE.)

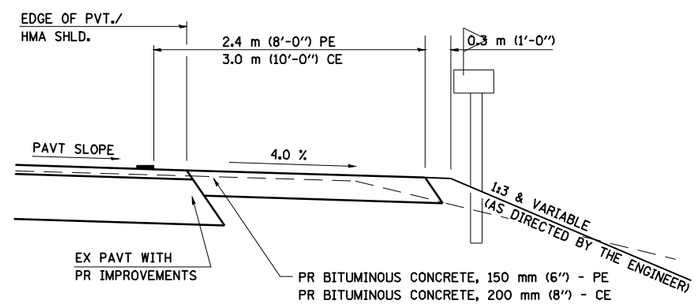

SECTION X-X THRU MAILBOX TURNOUT
COMBINED WITH EX BITUMINOUS CONC & PC CONC PE & CE

(DETAIL APPLIES WHEN M.B. TURNOUT DOES NOT EXIST. IF EXISTING, TREAT SAME AS ENTRANCE.)

NOTE 1 IF MORE THAN ONE MAILBOX IS PRESENT, DIMENSION FROM CENTER OF END MAILBOX.

NOTE 2 FOR ENTRANCE LAYOUT DIMENSIONS AND SECTIONS A-A & E-E REFER TO THE SCHEDULES IN THE PLANS.

NOTE 3 BOTH LT OR RT OFFSETS FOR MAILBOX SHOWN USE OFFSET DIMENSION PER SCHEDULE AND REFER TO LAYOUT SHOWN ON THE PLAN.

ALL DIMENSIONS ARE IN MILLIMETERS (INCHES) UNLESS OTHERWISE SHOWN.

FILE NAME = c:\pw_work\PWIDOT\LAUGHLINRL\d0151693\ent.ppp.dgn	USER NAME = laughlinrl	DESIGNED -	REVISED - 2/19/03 JCN	STATE OF ILLINOIS DEPARTMENT OF TRANSPORTATION	DIST. 6 DETAILS FOR RURAL/URBAN ENT., MAILBOX TURNOUT & SIDEROADS W/O CONC. GUTTER (3P-PROJ.)	F.A. RTE.	SECTION	COUNTY	TOTAL SHEETS	SHEET NO.
ENT PPP.DGN	PLOT SCALE = 40.000 ' / IN.	DRAWN - CADD	REVISED - 4/01/04 JCN			•	21RS-4 22RS-5	LOGAN	31	30
	PLOT DATE = Apr-09-2010 11:44:24AM	CHECKED - JCN	REVISED -					CONTRACT NO. 72A44		
		DATE - FEBRUARY 23, 1999	REVISED -		SCALE: SHEET NO. 2 OF 2 SHEETS STA. TO STA.	FED. ROAD DIST. NO.	ILLINOIS	FED. AID PROJECT		