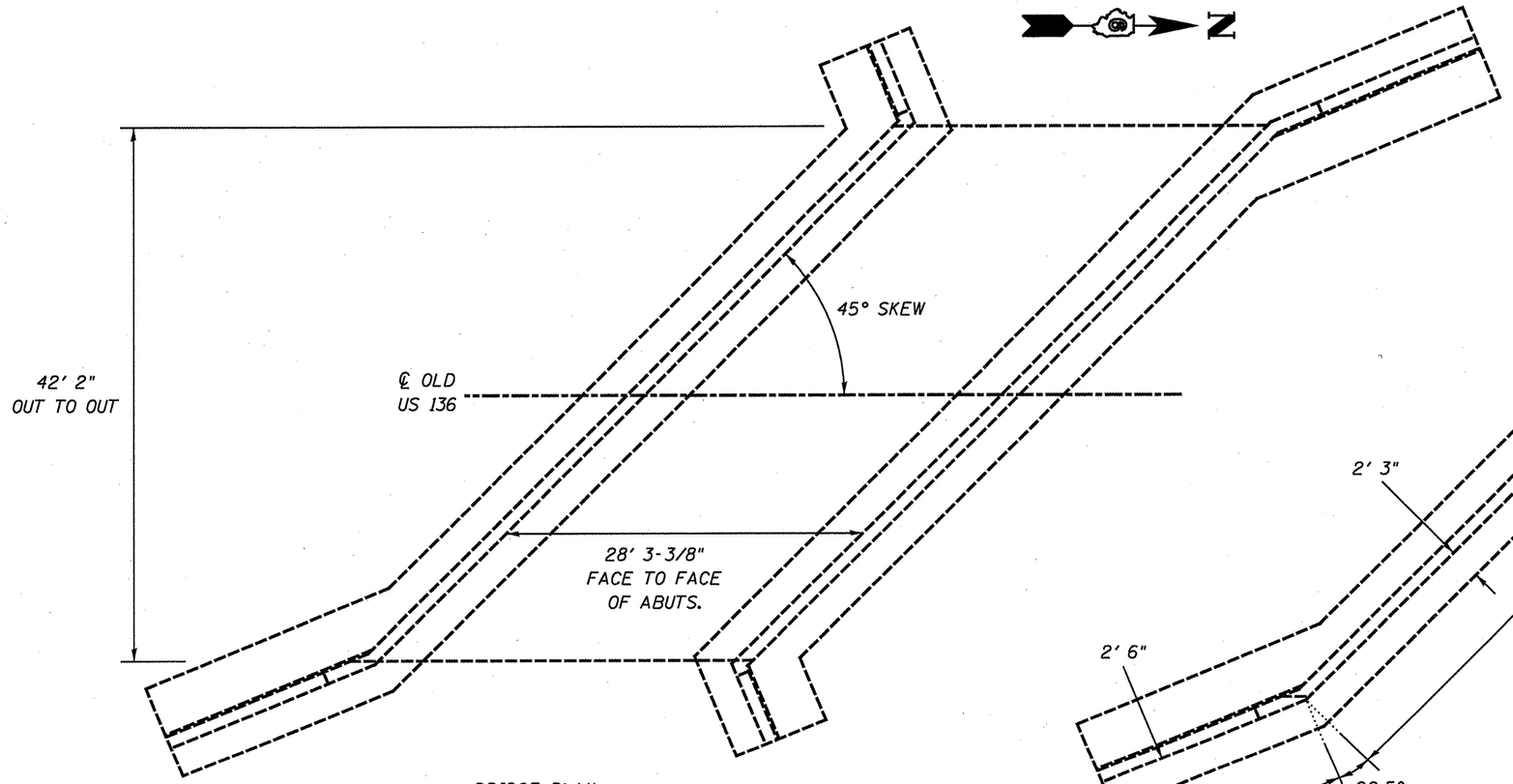


BRIDGE PLAN

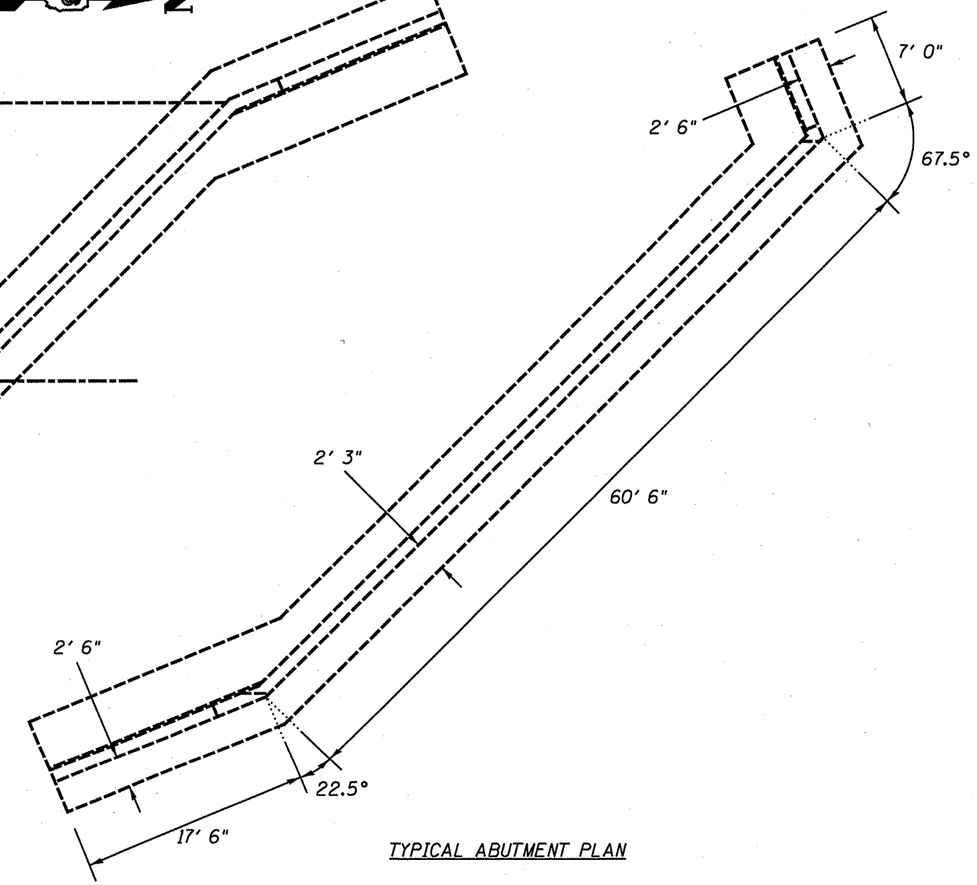


TYPICAL ABUTMENT PLAN

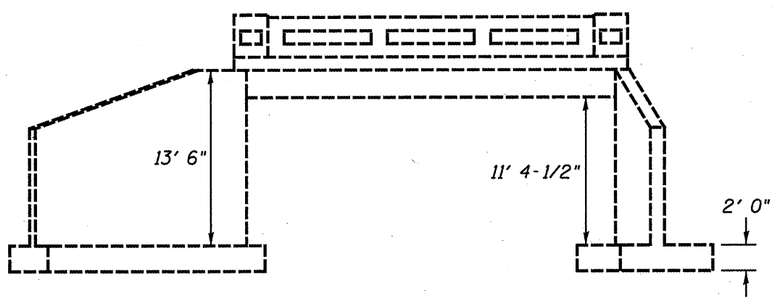


EAST ELEVATION

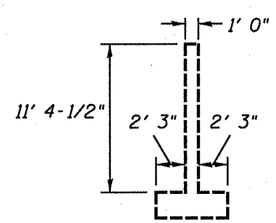


TYPICAL SECTION
AT ABUTMENT

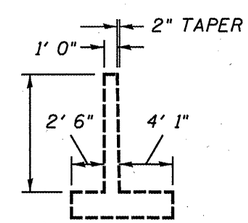


TYPICAL SECTION
AT END OF WING

063-0006 PLAN & ELEVATION
SBI 122 (OLD US 136)
D6 RIPRAP PROTECTION 2010
MASON COUNTY