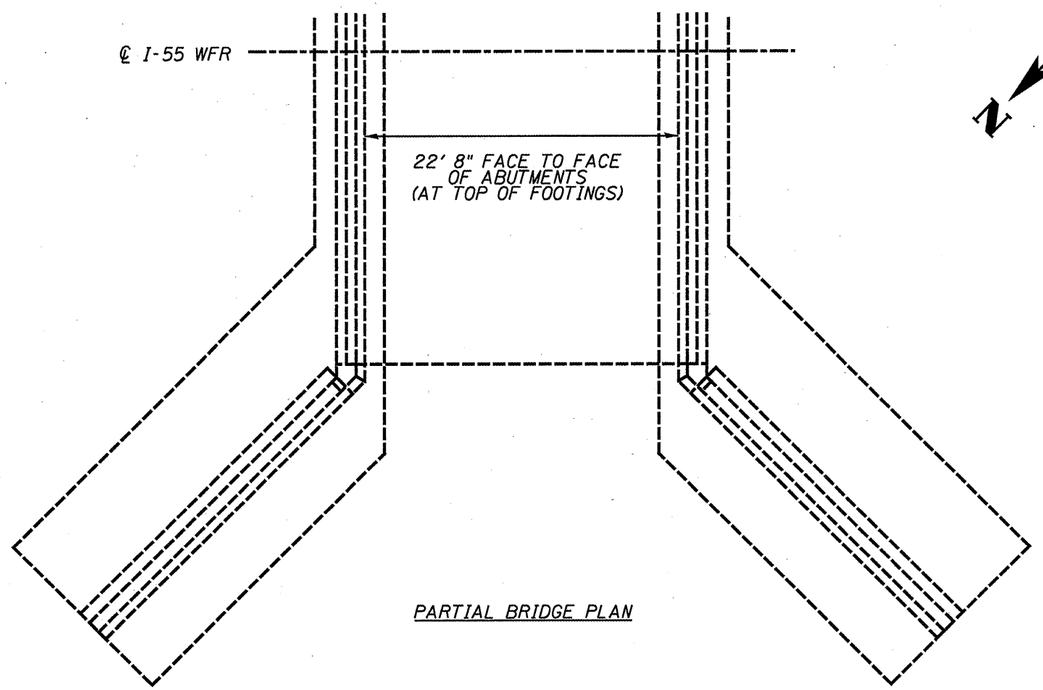

PARTIAL BRIDGE PLAN

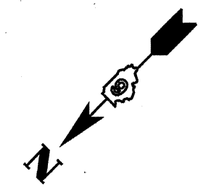

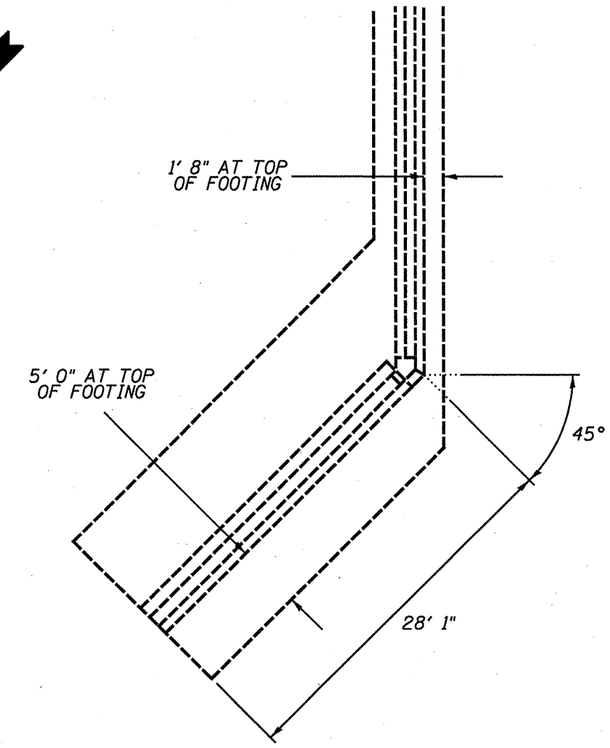

TYPICAL ABUTMENT PLAN

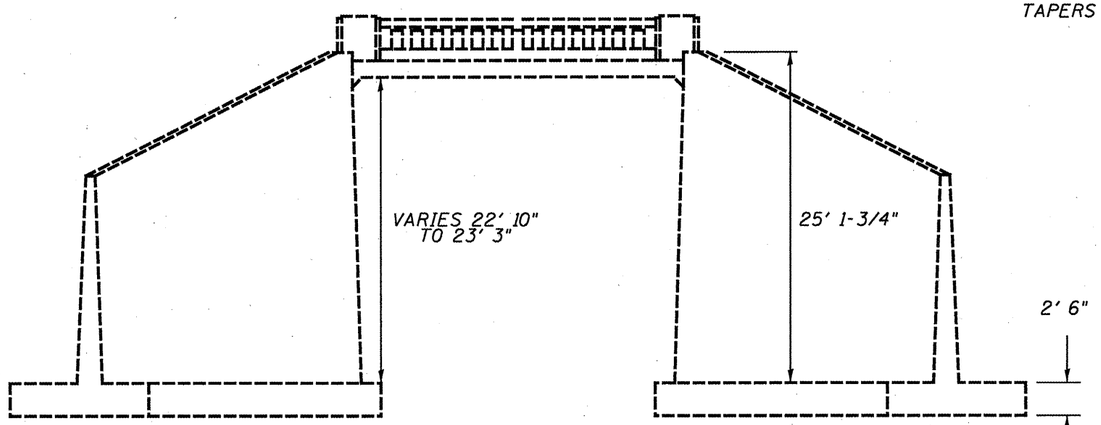

WEST ELEVATION

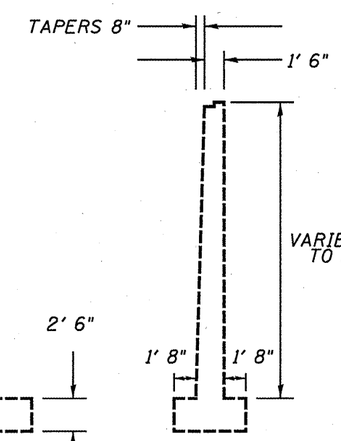

TYPICAL SECTION
AT ABUTMENT

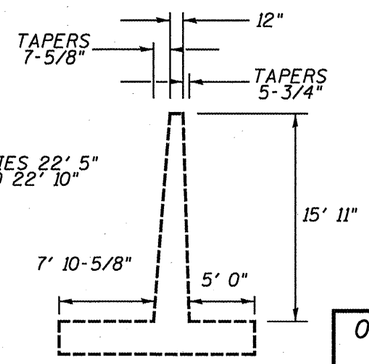

TYPICAL SECTION
AT END OF WING

054-0004 PLAN & ELEVATION
FAS 1773 (I-55 WFR)
D6 RIPRAP PROTECTION 2010
LOGAN COUNTY