STATE OF ILLINOIS
DEPARTMENT OF TRANSPORTATION

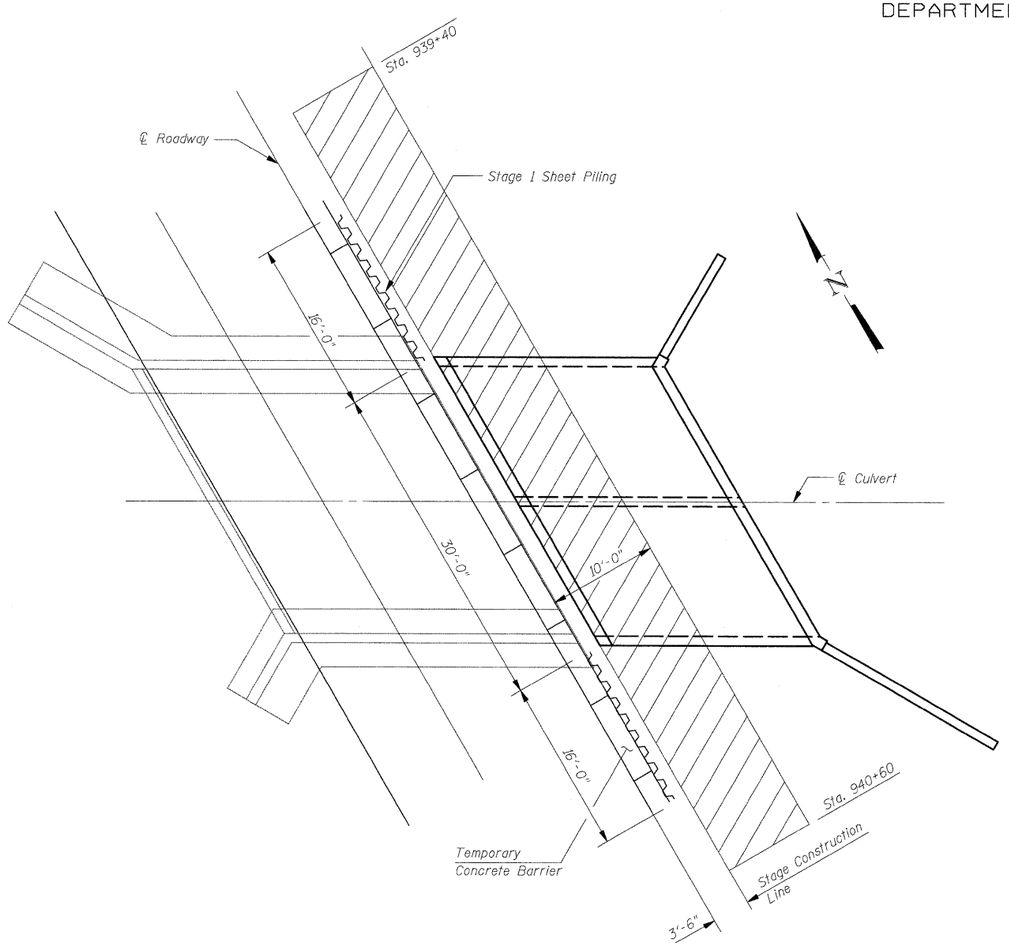

STAGE 1

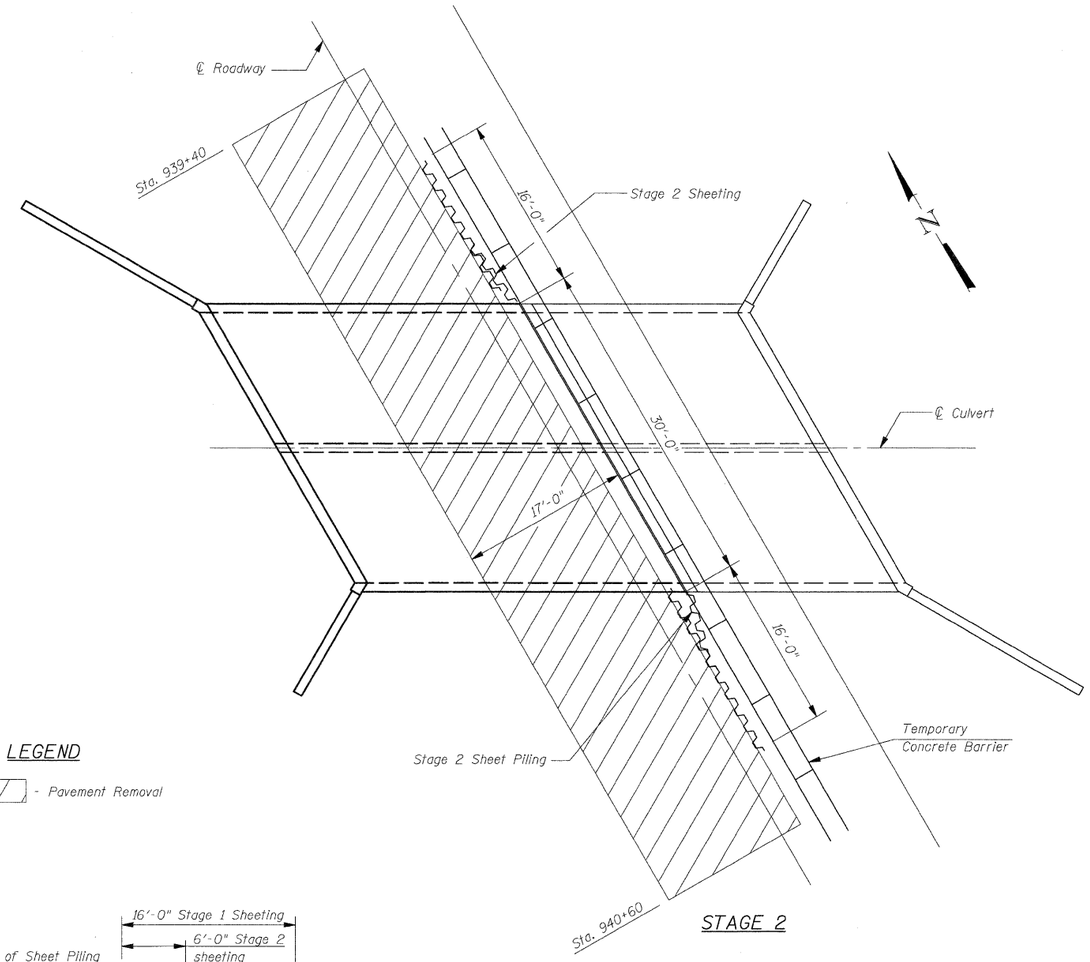

STAGE 2

LEGEND

- Pavement Removal

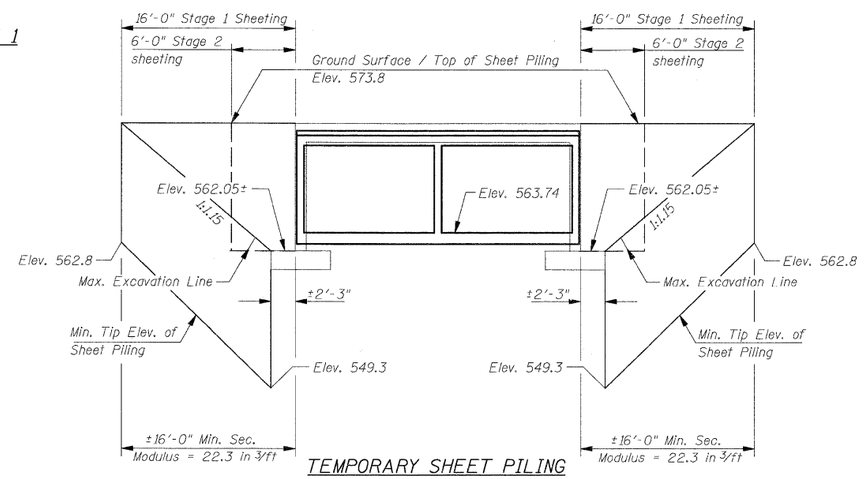

TEMPORARY SHEET PILING

Notes:

If the Contractor chooses to alter the temporary cantilevered sheet piling design requirements shown on the plans, a design submittal including plan details and calculations will be required for review and acceptance by the Engineer.

The Contractor shall connect the first sheet to the existing abutment wall to ensure stability of sheets driven to the top of the existing footing. This connection shall be reviewed and accepted by the Engineer and included in the cost for Temporary Sheet Piling.

STAGE CONSTRUCTION DETAILS & TEMPORARY SHEET PILING S.N. 026-2020

DESIGNED SCD					
CHECKED DRB					
DRAWN THW					
CHECKED -					

ie consultants
IE CONSULTANTS, INC
6420 SOUTH SIXTH STREET
SPRINGFIELD, ILLINOIS 62712
TEL. (217) 529-8027
FAX (217) 529-4543
IESPRINGFIELD@IE-CONSULTANTS.COM
WWW.IE-CONSULTANTS.COM

SHEET NO. 2 OF 9 SHEETS	F.A. RTE.	SECTION	COUNTY	TOTAL SHEETS	SHEET NO.
	*	114B-1(1) & 114B-1(2)	FAYETTE	54	20
	* F.A.P. RTE. 750, F.A.S. RTE. 719		CONTRACT NO. 74110		
	FED. ROAD DIST. NO. _	ILLINOIS	FED. AID PROJECT		