## SEQUENCE OF CONSTRUCTION:

**STAGE 2 TRAFFIC:**

SET UP TEMPORARY TRAFFIC CONTROL UTILIZING THESE PLANS IN CONJUNCTION WITH STANDARD 701321.

SIDEWALK SHALL REMAIN CLOSED FOR THE DURATION OF THIS STAGE.

RELOCATE TEMPORARY CONCRETE BARRIER AND PLACE PAVEMENT MARKING IN ACCORDANCE WITH THESE PLANS AND STANDARD 701321.

REMOVE ANY CONFLICTING PAVEMENT MARKINGS.

CHANNEL ALL TRAFFIC TO NORTH SIDE OF STRUCTURE.

**STAGE 2 CONSTRUCTION:**

REMOVE STAGE 2 PORTION OF EXISTING BOX CULVERT, CURB & GUTTER AND PAVEMENT.

CONSTRUCT REMAINDER OF BOX CULVERT, CURB & GUTTER AND RIP RAP.

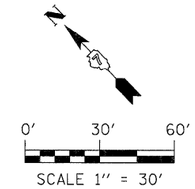


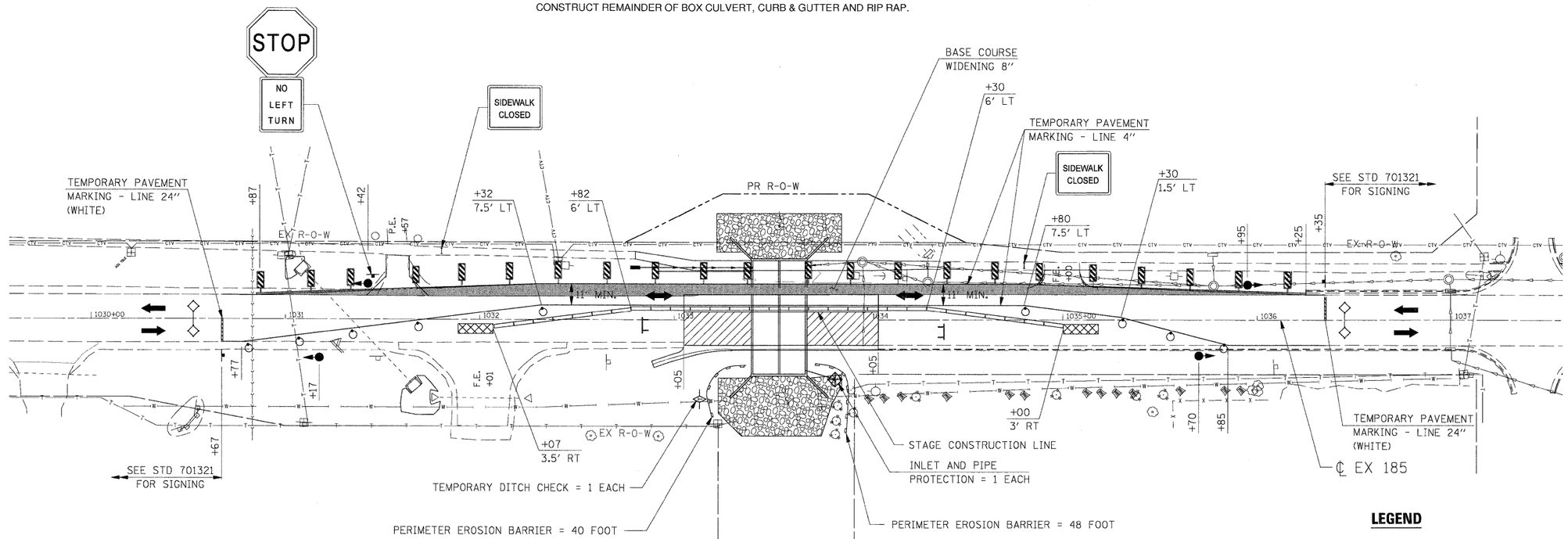


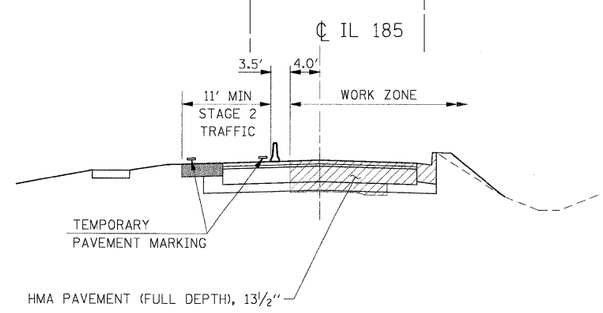


## STAGE 2 TYPICAL SECTION

## LEGEND

- SIGN
- DRUM WITH STEADY BURNING LIGHT (BI-DIRECTIONAL)
- TYPE II BARRICADE
- TRAFFIC SIGNAL
- TEMPORARY CONCRETE BARRIER
- IMPACT ATTENUATOR, TEMPORARY
- PAVEMENT REMOVAL
- DIRECTION OF TRAFFIC
- TYPE III BARRICADE
- LOOP DETECTORS
- DOUBLE VERTICAL PANEL

## GENERAL STAGING NOTES:

1. CONTRACTOR SHALL MAINTAIN ACCESS TO ENTRANCES AT ALL TIMES. NO SIGNALS WILL BE REQUIRED.
2. ACCESS MUST BE PROVIDED TO ALL F.E's. NO SIGNALS WILL BE REQUIRED.
3. THIS TRAFFIC CONTROL PLAN SHALL BE USED IN CONJUNCTION WITH STANDARD 701321 AND AS DIRECTED BY THE ENGINEER.

**PROPOSED S.N. 026–2019**

| | | | |
|---|---|---|---|
| FILE NAME = G:\S00026-6\Cadd Sheets\D774111-sht-Staging21-2.dgn | USER NAME = IE Consultants | DESIGNED - | REVISED - |
| | | DRAWN - | REVISED - |
| | PLOT SCALE = 30.0000 ' / IN. | CHECKED - | REVISED - |
| | PLOT DATE = 9/29/2009 | DATE - | REVISED - |

**STATE OF ILLINOIS**
**DEPARTMENT OF TRANSPORTATION**

**MAINTENANCE OF TRAFFIC – STAGE 2**

SCALE: | SHEET NO. OF SHEETS | STA. TO STA.

| F.A. RTE. | SECTION | COUNTY | TOTAL SHEETS | SHEET NO. |
|---|---|---|---|---|
| * | 114B-1(1) & 114B-1(2) | FAYETTE | 54 | 39 |
| * F.A.P. RTE. 750, F.A.S. RTE. 719 | | CONTRACT NO. 74110 | | |
| FED. ROAD DIST. NO. | ILLINOIS | FED. AID PROJECT | | |