Bench Mark: Chiseled square on the Northwest corner of the Northwest wing wall. Elev. = 667.71

Existing Structure: Structure No. 068-3232

Built in 1979 as F.A.U. Rte. 8243, Sec. 77-00062-00-BR as a single span precast prestressed concrete deck beam bridge 45'-4" Bk. to Bk. of abutments. Concrete pile bent abutments. Concrete deck beams to be removed and replaced. Existing abutments and piling to remain in place.

Salvage existing abutments

BRIDGE TOTAL BILL OF MATERIAL

Item	Unit	Quantity
Hot-Mix Asphalt Surface Course, Mix "C" N50	Ton	13
Removal of Existing Superstructure	Each	1
Bridge Rail Removal	Foot	88
Precast Prestressed Concrete Deck Beams (17" Depth)	Sq. Ft.	1,232
Reinforcement Bars (Epoxy Coated)	Lbs.	200
Steel Railing, Type S-1	Foot	88
Name Plate	Each	1
Waterproofing Membrane System	Sq. Yd.	137
Portland Cement Mortar Fairing Course	Foot	264
Drill and Grout Bars	Each	56
Traffic Barrier Terminal, Type 5A	Each	4
Concrete Structures	Cu Yd	2.0

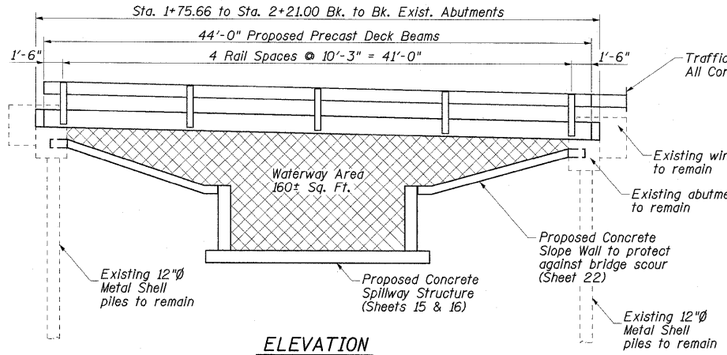

ELEVATION

STATION 1+98.33
RE-BUILT 201_ BY
MONTGOMERY COUNTY
F.A.U. RT 8243 SEC. 09-00134-00-DR
LOADING HL-93
STR. NO. 068-3232

NAME PLATE

See Std. 515001
(Locate Name Plate on roadway face of rail at Southeast corner)

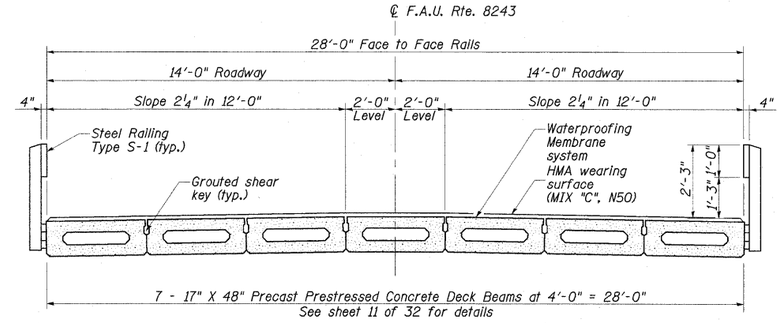

CROSS SECTION

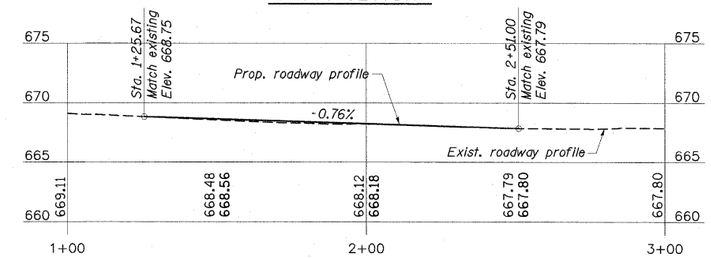

ROADWAY PROFILE

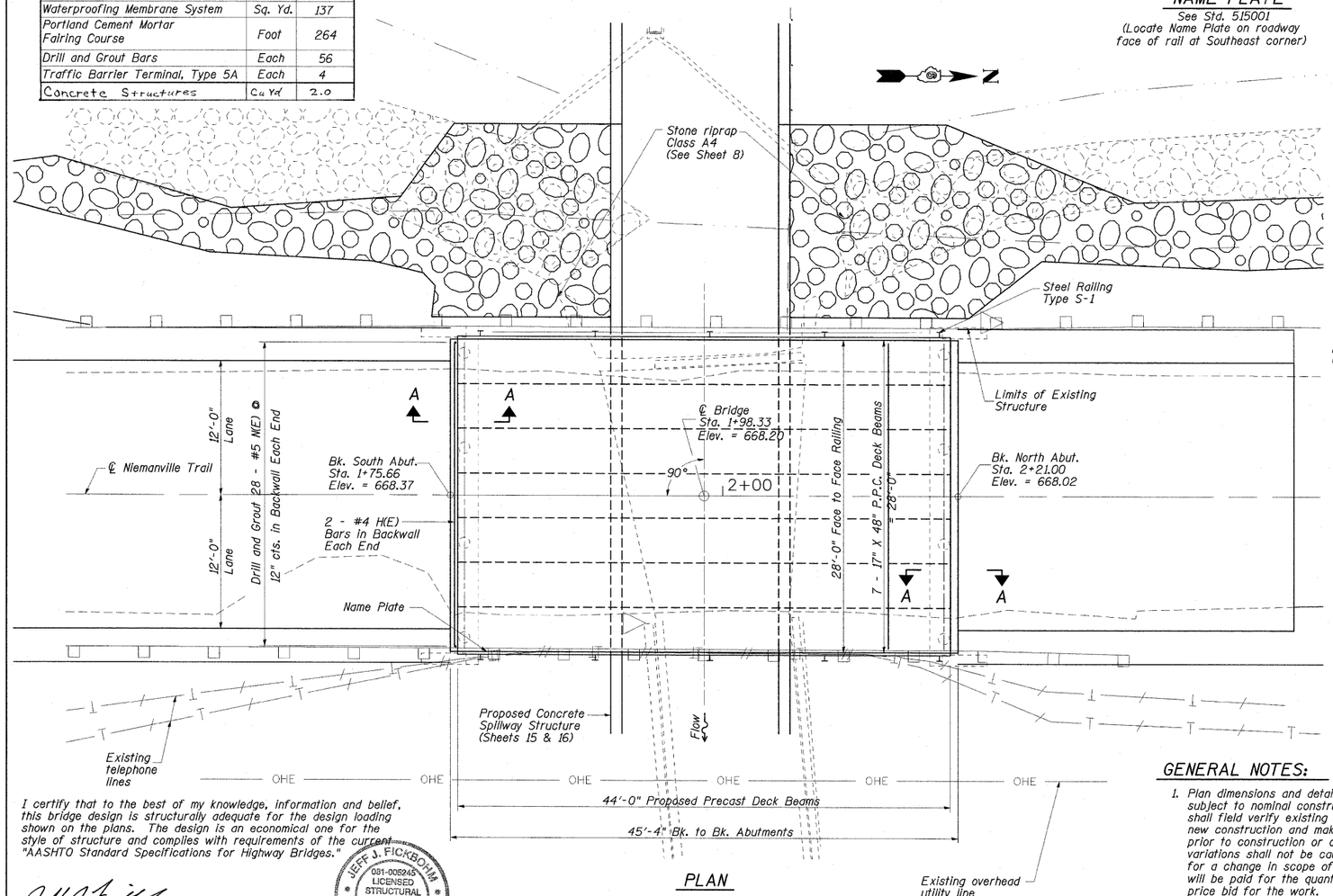

PLAN

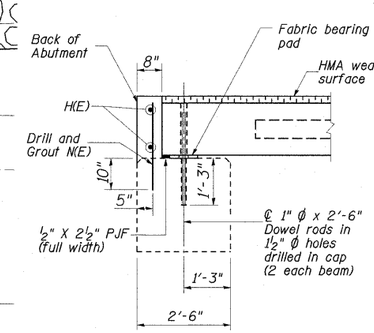

SECTION A-A

See sheet 11 of 32 for fabric bearing pad details.

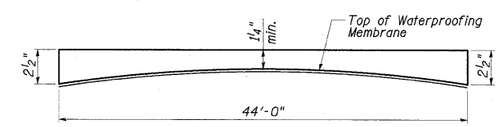

ANTICIPATED HMA WEARING SURFACE PROFILE

(For information only)

BAR LIST

Bar	No.	Size	Length	Shape
H(E)	4	#4	27'-8"	
N(E)	56	#5	2'-2"	

HIGHWAY CLASSIFICATION

Functional Class:
ADT: 1465 (2010); 2180 (2030)
ADTT: 30 (2010); 44 (2030)

DESIGN SPECIFICATIONS

AASHTO LRFD 4th Edition with 2008 & 2009 interims
(Proposed superstructure)

SEISMIC DATA

Seismic Performance Zone (SPZ) = 1
Bedrock Acceleration Coefficient (A) = 0.04g
Site Coefficient (S) = 1.5

LOADING HL-93

LRFD HL-93 (Proposed superstructure)
HS-20-44 (Existing substructure)
Allow 25 psf for future wearing surface.

DESIGN STRESSES

f'c = 6,000 psi (Prestreesed Beams)
f'ci = 5,000 psi (Prestressed Beams)
f's = 270,000 psi (Prestressed Strands)
f'si = 201,960 psi (Prestressed Strands)

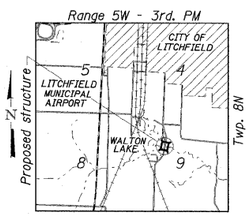

LOCATION SKETCH

GENERAL NOTES:

1. Plan dimensions and details relative to existing plans are subject to nominal construction variations. The contractor shall field verify existing dimensions and details affecting new construction and make necessary approved adjustments prior to construction or ordering of materials. Such variations shall not be cause for additional compensation for a change in scope of the work. However, the contractor will be paid for the quantity actually furnished at the unit price bid for the work.
2. Existing name plate shall be cleaned and relocated next to new name plate. Cost included with name plates.
3. Reinforcement bars designated (E) shall be Epoxy Coated.

I certify that to the best of my knowledge, information and belief, this bridge design is structurally adequate for the design loading shown on the plans. The design is an economical one for the style of structure and complies with requirements of the current "AASHTO Standard Specifications for Highway Bridges."

Jeff J. Fickbohm, P.E., S.E.
Illinois Licensed Structural Engineer
License Number: 081-005245
Expiration Date: November 30, 2010

JEFF J. FICKBOHM 081-005245 LICENSED STRUCTURAL ENGINEER STATE OF ILLINOIS SPRINGFIELD, ILLINOIS

(Sheets 10 - 24)

FILE NAME = ...\draw\Sheets\GP&E_Bridge.dgn	USER NAME = Kristin Timmons	DESIGNED - CJW/JJF	REVISED -
		DRAWN - GLD	REVISED -
	PLOT SCALE = 6.0000 ' / IN.	CHECKED - WLB/JJF	REVISED -
	PLOT DATE = 3/3/2010	DATE - 3/2/2010	REVISED -

NIEMANVILLE TRAIL
MONTGOMERY COUNTY, ILLINOIS

GENERAL PLAN AND ELEVATION
STATION 1+98.33 S.N. 068-3232
NIEMANVILLE TRAIL OVER SPILLWAY AT WALTON LAKE

SCALE: | SHEET NO. 10 OF 32 SHEETS | STA. | TO STA.

F.A.U. RTE.	SECTION	COUNTY	TOTAL SHEETS	SHEET NO.
8243	09-00134-00-DR	MONTGOMERY	32	10
		CONTRACT NO. 93537		

FED. ROAD DIST. NO. 6 | ILLINOIS | FED. AID PROJECT