CONTRACT NO. 97444

F.A.U. RTE.	SECTION	COUNTY	TOTAL SHEETS	SHEET NO.
9307	06-00042-02-PV	MONROE	32	17
STA. 55+00		TO STA. 62+97.86		
FED. ROAD DIST. NO.	ILLINOIS	FED. AID PROJECT		

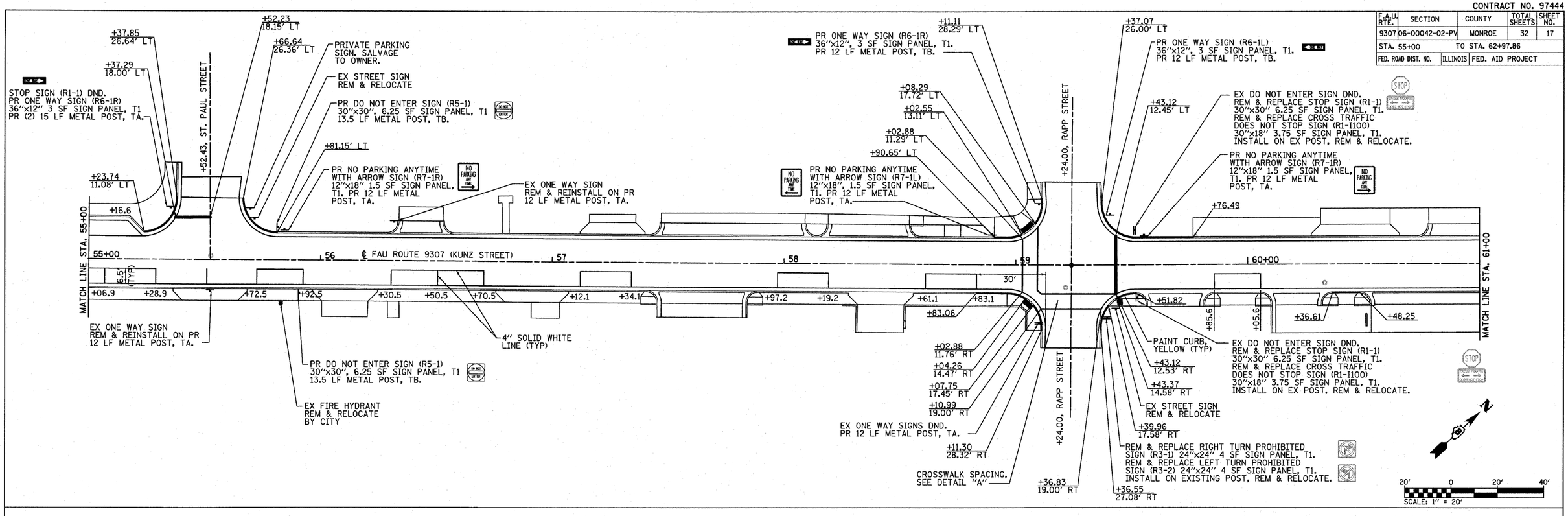

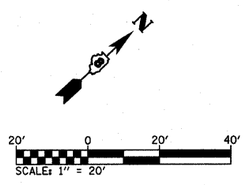

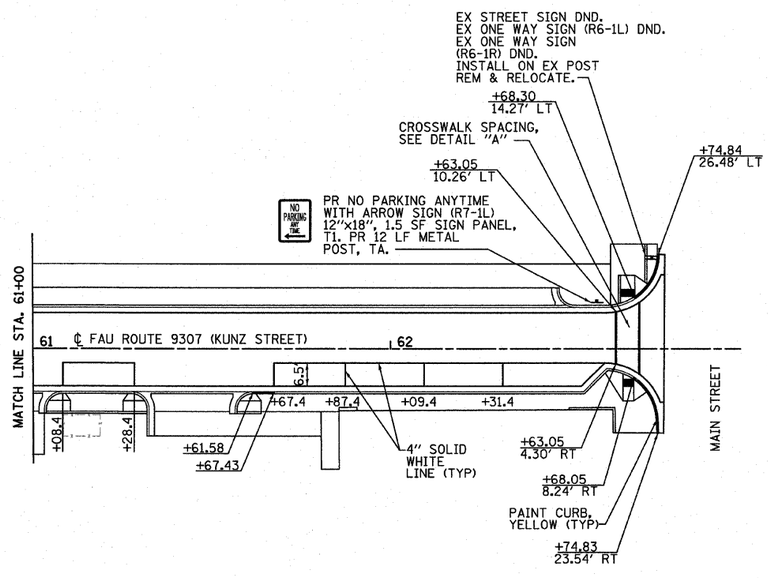

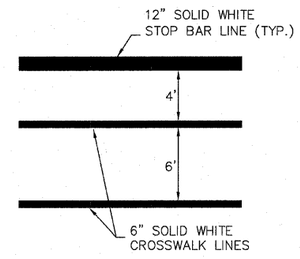

DETAIL "A"
(NOT TO SCALE)

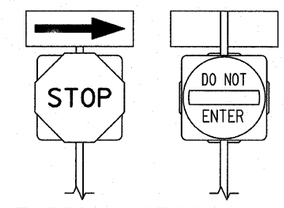

TYPICAL STOP SIGN, DO NOT ENTER SIGN, & ONE WAY SIGN INSTALLATION

NOTE: INSTALL PR STOP/DO NOT ENTER/ ONE-WAY SIGNS THAT ARE ON THE SAME POST WITH ONE-WAY SIGN ABOVE STOP SIGN. ALSO, MODIFY EX STOP/ DO NOT ENTER/ONE-WAY INSTALLATIONS TO CONFORM TO THIS DETAIL (COST FOR THIS WORK INCLUDED IN THE UNIT COST FOR SIGN PANELS).

LEGEND

- PROPOSED R6-1R
- PROPOSED R6-1L
- PROPOSED R7-1R
- PROPOSED R7-1L
- PROPOSED R5-1
- PROPOSED R1-4
- REMOVE & REPLACE EXISTING R1-1
- REMOVE & REPLACE EXISTING R1-I100
- REMOVE & REPLACE EXISTING R6-1R
- REMOVE & REPLACE EXISTING R3-1
- REMOVE & REPLACE EXISTING R3-2

PLAN — SURVEYED / PLOTTED / ALIGNMENT CHECKED / RT. OF WAY CHECKED / CADD FILE NAME ____ / NOTE BOOK NO. ____ / BY / DATE

PROFILE — SURVEYED / PLOTTED / GRADES CHECKED / STRUCTURE NOTATNS CH'KD / NOTE BOOK NO. ____ / BY / DATE

PLOT DATE = 4/21/2010
FILE NAME = H:\P\29092\Microstation\586pm08.Kunz.dgn
PLOT SCALE = 28.000 ' / IN.
USER NAME = randj

PAVEMENT MARKING PLAN - STA. 55+00 TO STA. 62+97.86 KUNZ ST.