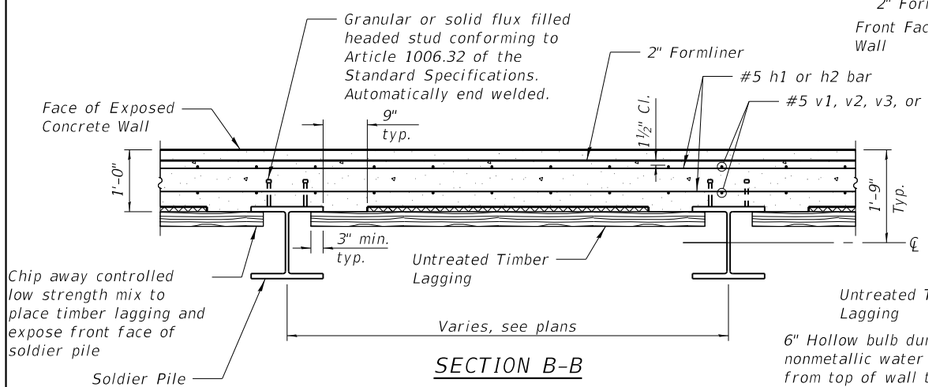

SECTION B-B

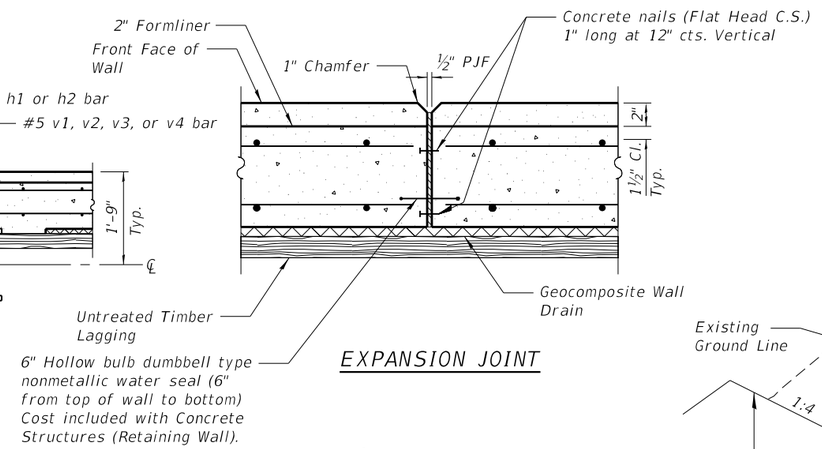

EXPANSION JOINT

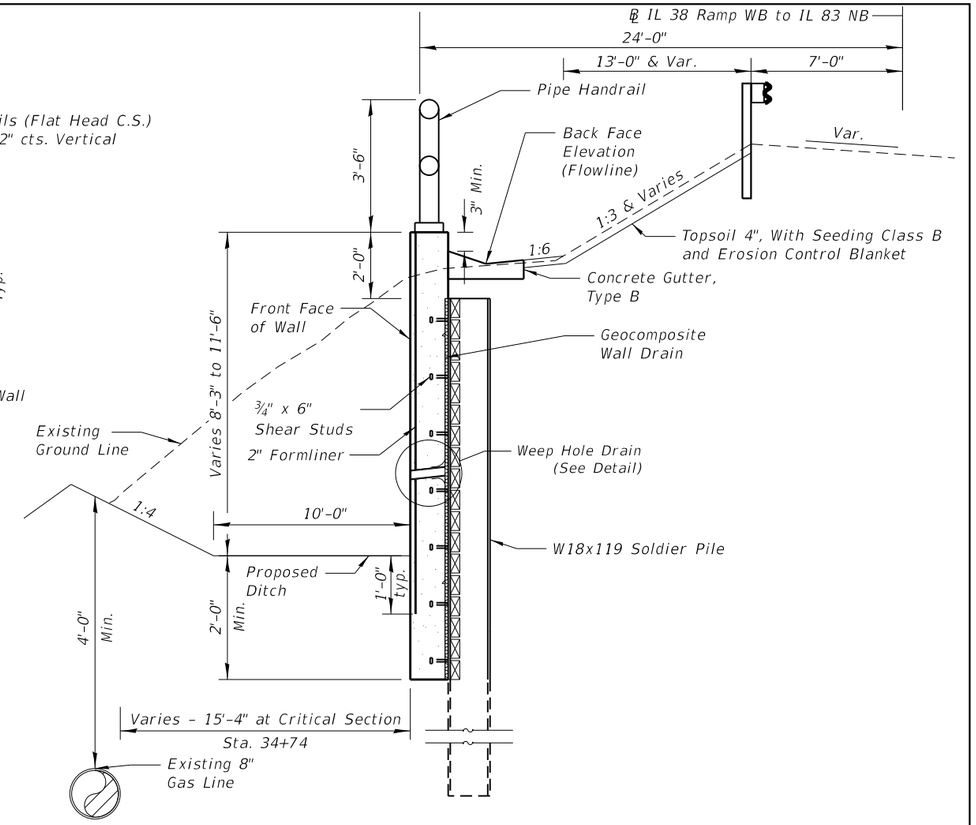

SECTION A-A

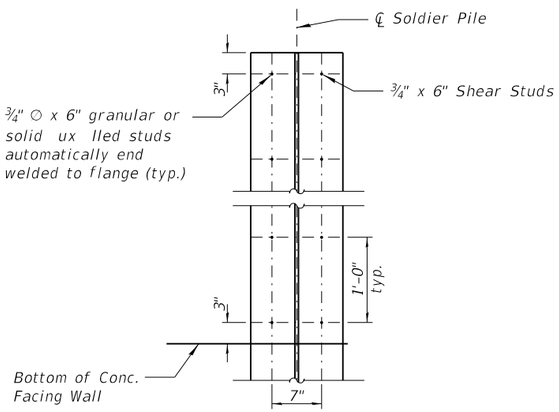

STUD SHEAR CONNECTORS LAYOUT

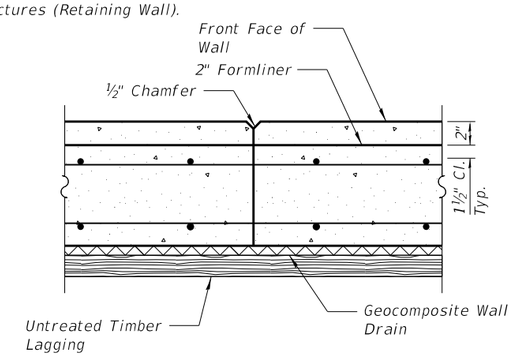

CONSTRUCTION JOINT

Location	Ramp WB Station	Ramp WB Offset	Top of Wall Elev.	Back Face Elev.	Front Face Grade Elev.	Bot. Facing Elev.	Top of Gas Line Elev.	Top of Gas o set
A	32+80.22	24.00'	664.28	663.28	659.28	654.05	654.30	90.2 RT
B*	33+08.32	23.90'	664.33	663.43	656.07	654.07	653.90	77.6 RT
C*	33+36.00	23.97'	664.38	663.50	656.08	654.08	653.40	64.4 RT
D*	33+63.69	23.97'	664.44	663.43	656.10	654.10	652.60	54.5 RT
E*	33+91.38	23.98'	664.49	663.47	656.12	654.12	652.40	48.3 RT
F*	34+19.06	23.98'	664.55	663.73	656.14	654.14	652.40	43.6 RT
G*	34+46.75	23.96'	664.60	663.78	656.15	654.15	653.00	41.2 RT
H*	34+74.44	23.99'	664.65	663.80	656.17	654.17	653.70	39.7 RT
I*	35+02.12	23.99'	664.71	663.73	656.19	654.19	654.30	42.4 RT
J*	35+29.81	24.00'	664.76	663.76	656.20	654.20	655.00	48.3 RT
K*	35+57.56	24.00'	665.57	664.10	656.22	654.22	655.90	57.5 RT
L	35+87.86	24.47'	666.38	665.38	656.24	654.24	656.80	67.5 RT
M	36+18.45	24.48'	667.07	666.19	656.26	654.26	657.80	76.5 RT
N	36+48.61	24.03'	667.75	666.75	656.28	654.28	658.70	85.4 RT
O	36+63.78	23.63'	666.85	665.85	661.05	654.29	659.00	89.2 RT

*Location of Kink Point

ELEVATION TABLE

(Wall Offsets are measured from the Edge of Roadway for IL 38 Ramp WB to Front Face of Wall.)

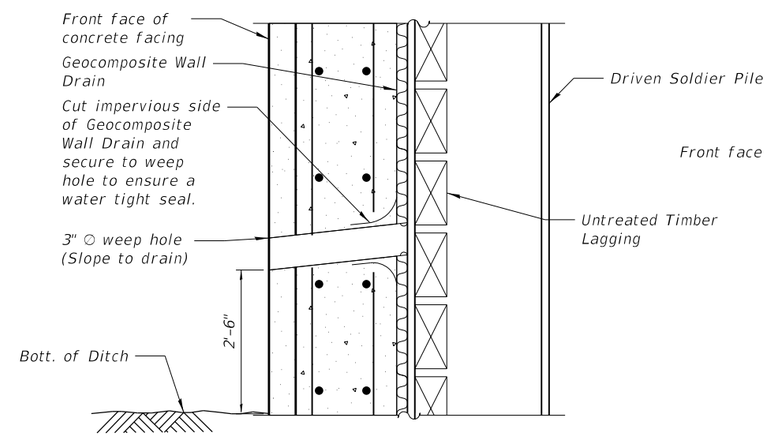

WEEP HOLE DRAIN DETAIL

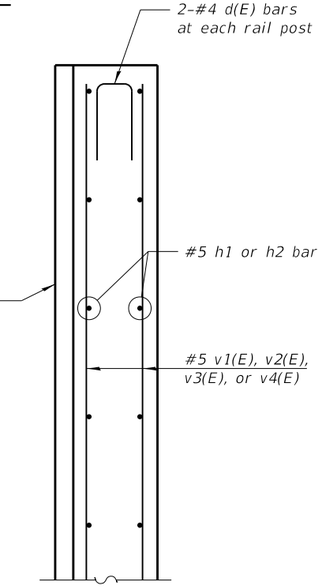

HANDRAIL REINFORCEMENT DETAIL

RET-07

Bowman CONSULTING
311 S. Wacker Drive, Suite 1950
Chicago, Illinois 60606
312.494.0360
www.bowmanconsulting.com

USER NAME = khejtmanek	DESIGNED - AS	REVISED -	
	DRAWN - AHT	REVISED -	
PLOT SCALE = 2:0 ft:in / in.	CHECKED - AJN	REVISED -	
PLOT DATE = 3/10/2021	DATE - 3/11/2021	REVISED -	

STATE OF ILLINOIS
DEPARTMENT OF TRANSPORTATION

WALL CROSS SECTION AND DETAILS
RETAINING WALL - STRUCTURE NO.022-W001

SCALE: | SHEET RET-7 OF RET-11 SHEETS | STA. TO STA.

F.A.P. RTE.	SECTION	COUNTY	TOTAL SHEETS	SHEET NO.
344	2020-196-T	DUPAGE	122	72

CONTRACT NO. 62M69

ILLINOIS | FED. AID PROJECT

MODEL: 022-W001-62M69-sh-07
FILE NAME: P:\040058 - IDOT\040058-01-002 (ENG) - PTB 195-016 Phase II Var VanEngineering\WO 1 - IL83-IL38\500 Drawings\501 CADD Drawings\D162M69-RW-XSection Details.dgn