CONTROLLER SEQUENCE

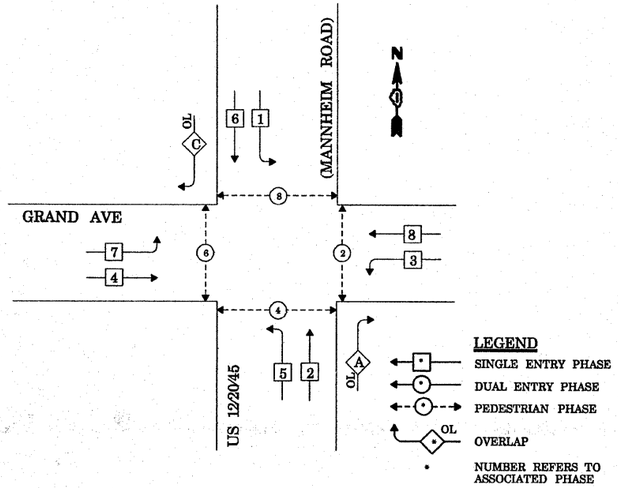

PHASE DESIGNATION DIAGRAM

RIGHT TURN OVERLAP PHASE DESIGNATION

OVERLAP PHASE		PERMISIVE PHASE		PROTECTED PHASE		DISPLAY
A	=	2	+	3	-	2
C	=	6	+	7	-	6

EMERGENCY VEHICLE PREEMPTION SEQUENCE

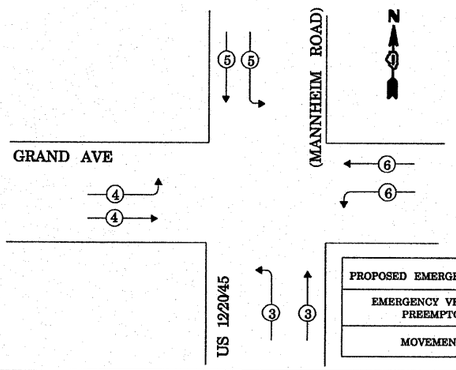

PROPOSED EMERGENCY VEHICLE PREEMPTORS				
EMERGENCY VEHICLE PREEMPTOR	3	4	5	6
MOVEMENT				

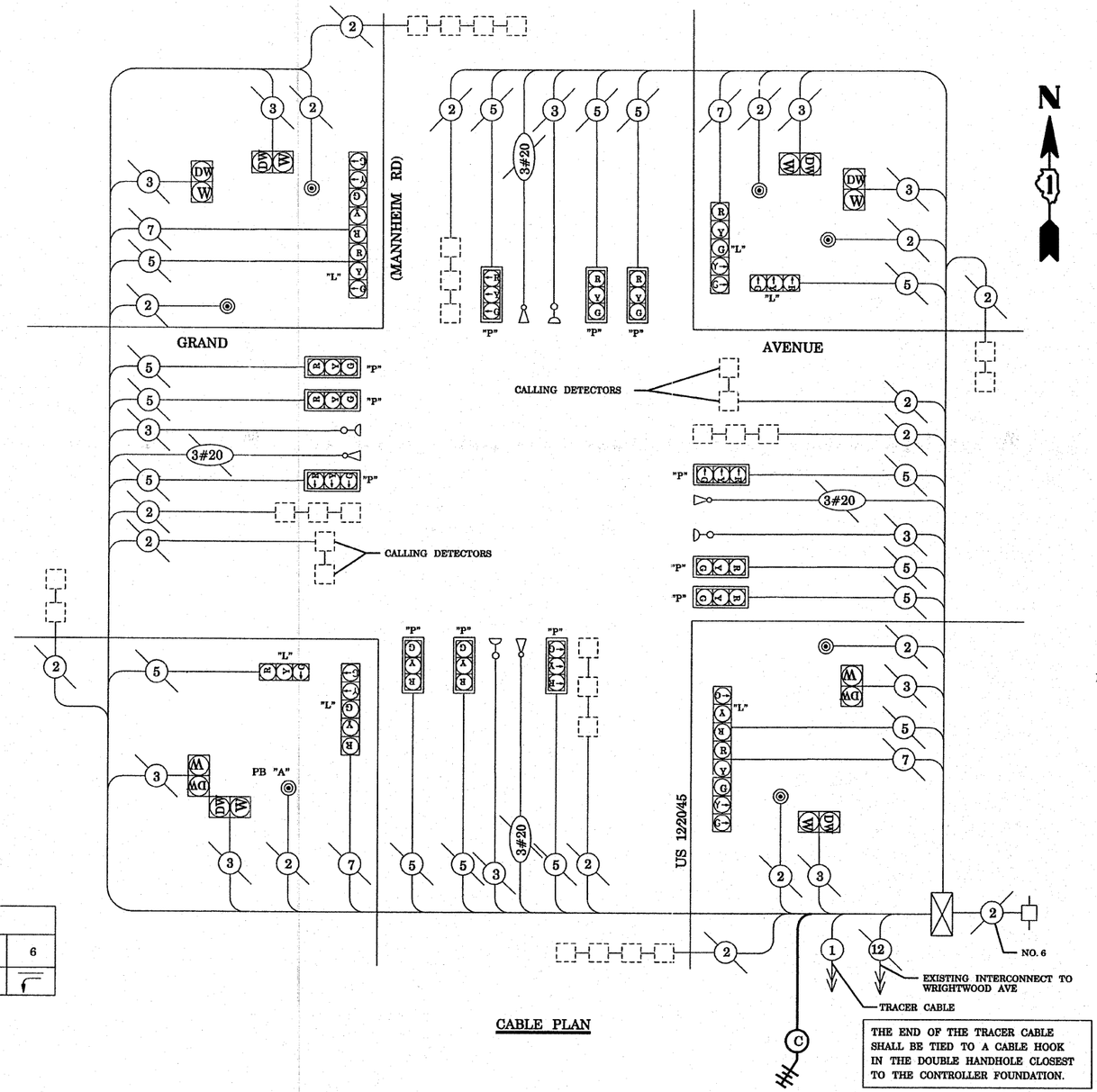

THE END OF THE TRACER CABLE SHALL BE TIED TO A CABLE HOOK IN THE DOUBLE HANDHOLE CLOSEST TO THE CONTROLLER FOUNDATION.

CABLE PLAN

CABLE PLAN LEGEND

PROPOSED	EXISTING	
		8" (200mm) TRAFFIC SIGNAL SECTION
		12" (300mm) TRAFFIC SIGNAL SECTION
		12" (300mm) PEDESTRIAN SIGNAL SECTION
		12"(300mm) PEDESTRIAN SIGNAL SECTION
		CONTROLLER CABINET
		SERVICE INSTALLATON
		TELEPHONE CONNECTION
		MAGNETIC DETECTOR
		PUSHBUTTON DECTECTOR
		VEHICLE DETECTOR, INDUCTION LOOP
		DENOTES NUMBER OF CONDUCTORS. ALL CABLE NO. 14 EXCEPT AS INDICATED. ALL LOOP DETECTOR CABLE TO BE SHIELDED.
		SIGNAL FACE WITH BACKPLATE. "P" INDICATES PROGRAMMED HEAD
"P"	"P"	
"E"	"E"	RAILROAD CONTROL CABINET
"E"	"E"	ILLUMINATED SIGN, FIBER OPTIC "NO LEFT TURN"
"E"	"E"	ILLUMINATE SIGN, FIBER OPTIC "NO RIGHT TURN"
HC	HC	GROUND ROD AT HANDHOLE, DOUBLE HANDHOLE, OR CONTROLLER
P	P	GROUND ROD AT POST OR MAST ARM POLE
S	S	GROUND ROD AT ELECTRIC SERVICE INSTALLATION
1	1	GROUND CABLE IN CONDUIT NO. 6 SOLID COPPER (GREEN)
24	24	FIBER OPTIC CABLE IN CONDUIT NO.62.5/125 2-MM12F & SM12F
		MICROWAVE VEHICLE SENSOR
V	V	VIDEO DETECTOR
C	C	CLOSED CIRCUIT TV
		EMERGENCY VEHICLE LIGHT DETECTOR
		CONFIRMATION BEACON
B	B	UNINTERRUPTIBLE POWER SUPPLY
		WIRELESS INTERCONNECT (ANTENNA)

TYPE	NO. LAMPS	WATTAGE INCAND.	WATTAGE LED	% OPERATION	TOTAL WATTAGE
SIGNAL (RED)	20		17	0.50	170.00
(YELLOW)	20		25	0.25	125.00
(GREEN)	20		15	0.25	75.00
ARROW	8		12	0.10	9.60
PED. SIGNAL	8		25	1.00	200.00
CONTROLLER	1		100	1.00	100.00
ILLUM. SIGN					
FLASHER					-
				TOTAL=	679.60

ENERGY COSTS TO:
VILLAGE OF FRANKLIN PARK
4500 BELMONT AVENUE
FRANKLIN PARK, IL 60131

ENERGY SUPPLY CONTACT: LINDA KLOC
PHONE: (708)410-5313
COMPANY: COMMONWEALTH EDISON

NOTE:
THE TRAFFIC SIGNAL CONTROLLER EQUIPMENT FOR THIS PROJECT SHALL BE "ECONOLITE" TO MATCH THE EXISTING ADJACENT SYSTEM.

* TEMPORARY WIRELESS INTERCONNECT IS INCLUDED IN TEMPORARY TRAFFIC SIGNAL INSTALLATION PAY ITEM FOR BELMONT AVENUE

NOTE:
PUSHBUTTON "A" SHALL PLACE A CALL IN PHASES 4 AND 6

FILE NAME = c:\projects\traffic\t070027\us12_20_45.dgn	USER NAME = kanthaphixaybc	DESIGNED - N.B.	REVISED -
		DRAWN - N.B.	REVISED -
	PLOT SCALE = 40.0000 ' / IN.	CHECKED - D.B.	REVISED -
	PLOT DATE = 10/10/2008	DATE - 09/04/2008	REVISED -

STATE OF ILLINOIS
DEPARTMENT OF TRANSPORTATION

EXISTING CABLE PLAN
US 12/20/45 (MANNHEIM ROAD) AT GRAND AVENUE

SCALE: NTS | SHEET NO. OF SHEETS | STA. TO STA.

F.A.P. RTE.	SECTION	COUNTY	TOTAL SHEETS	SHEET NO.
330	2008-006 TS	COOK	104	15
		CONTRACT NO. 60E31		

FED. ROAD DIST. NO. | ILLINOIS | FED. AID PROJECT

...\traffic\070027\us12_20_45.dgn 10/10/2008 2:14:47 PM User=kanthaphixaybc