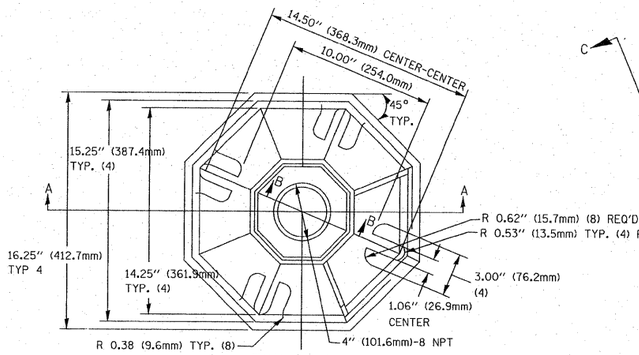

TOP VIEW

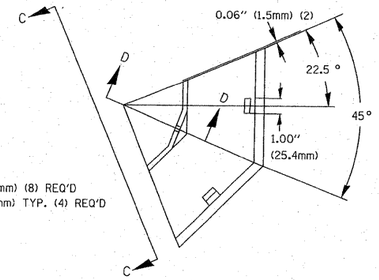

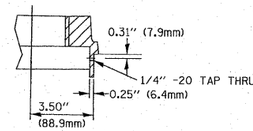

SECTION B-B

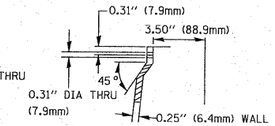

SECTION D-D

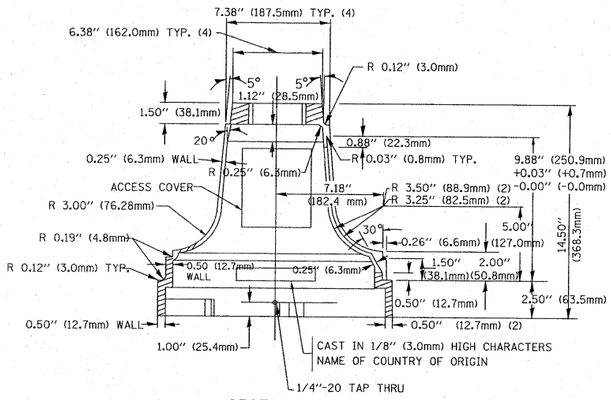

SECTION A-A

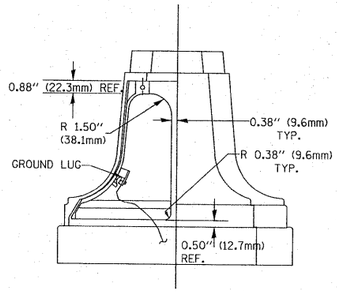

VIEW C-C

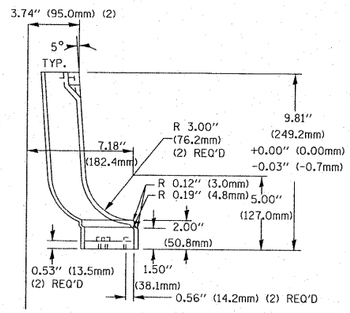

TRAFFIC SIGNAL POST - MOUNTING BASE - TYPE A

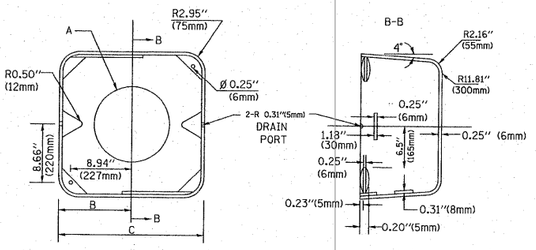

MATERIAL:
- ASTM A48 CLASS 30 GREY IRON
- ASTM A123 HOT DIPPED GALVANIZED

TYPE	A	B	C	HEIGHT	WEIGHT
I	Ø 10.125"(257mm)	9.5"(241mm)	19"(483mm)	12" (300mm)	24kg
II	Ø 11.125"(283mm)	10.75"(273mm)	21.5"(546mm)	12" (300mm)	26kg

SHROUD DETAIL

NOTE:
SUPPORT EXISTING CABINET AND CONTROL EQUIPMENT ABOVE FOUNDATION TO KEEP TRAFFFIC SIGNAL FUNCTIONING WHILE FOUNDATION MODIFICATION WORK IS PROCEEDING.

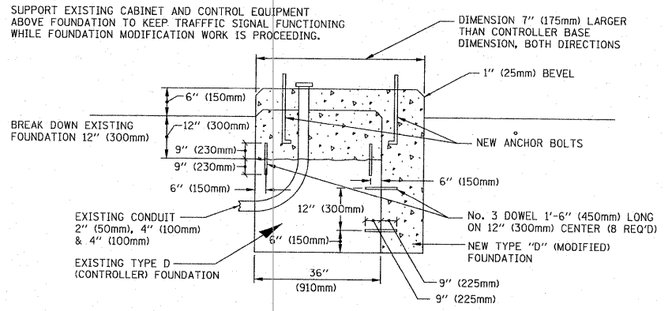

MODIFY EXISTING TYPE "D" FOUNDATION

(NOT TO SCALE)

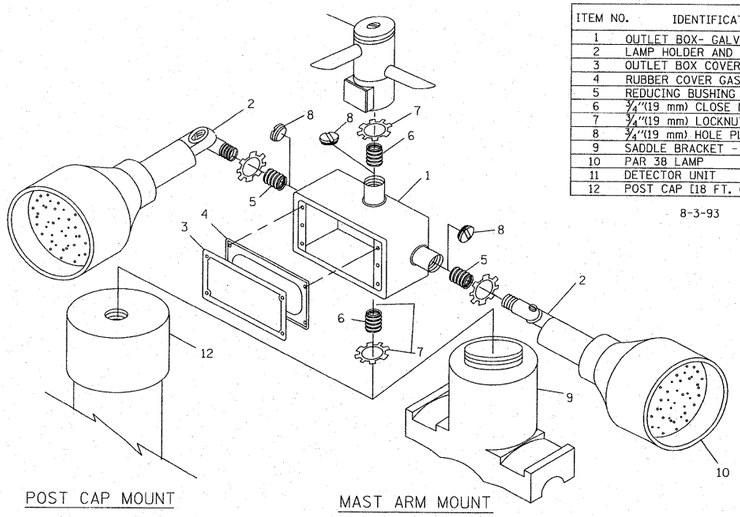

POST CAP MOUNT

MAST ARM MOUNT

EMERGENCY VEHICLE DETECTOR WITH CONFIRMATION BEACON MOUNTING DETAIL

ITEM NO.	IDENTIFICATION
1	OUTLET BOX- GALV. 21 CU.IN. (0.000344 CU-M)
2	LAMP HOLDER AND COVER
3	OUTLET BOX COVER
4	RUBBER COVER GASKET
5	REDUCING BUSHING
6	3/4"(19 mm) CLOSE NIPPLE
7	3/4"(19 mm) LOCKNUT
8	3/4"(19 mm) HOLE PLUG
9	SADDLE BRACKET - GALV.
10	PAR 38 LAMP
11	DETECTOR UNIT
12	POST CAP [18 FT. (5.4 m) POST MIN.]

8-3-93

NOTES:

1. ALL ELECTRICAL ITEMS, EXCEPT ITEMS #2 AND #11 SHALL BE ALUMINUM OR GALVANIZED
2. ITEM #1- OZ/GEDNEY FSX-1-50 OR EQUIVALENT
   ITEM #2- MULBERRY CON-O-SHADE LAMP SHIELD OR EQUIVALENT
   ITEM #9- "BAND-IT" SADDLE BRACKET OR EQUIVALENT
3. WHEN POST MOUNTING IS SPECIFIED, ITEM #9 SHALL NOT BE REQUIRED. THE DETECTION UNIT SHALL BE MOUNTED DIRECTLY ON TOP OF THE CAP BY DRILLING AND TAPPING A 3/4"(19 mm) HOLE WITH PIPE THREADS. THE POST CAP SHALL EITHER BE SCREWED TO THE TOP OF THE POST OR A MINIMUM OF 3 TIGHTENING SCREWS SHALL BE REQUIRED ON EACH CAP.

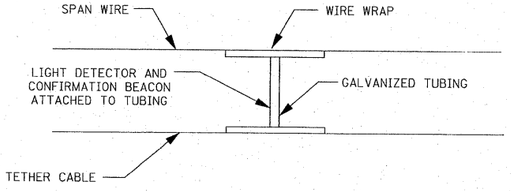

LIGHT DETECTOR AND CONFIRMATION BEACON MOUNTING FOR TEMPORARY TRAFFIC SIGNALS

(NOT TO SCALE)

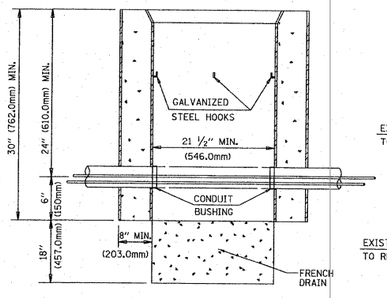

ELEVATION

NOTES:

1. REMOVAL OF EXISTING CONDUIT FROM THE HANDHOLE AND THE INSTALLATION OF THE CONDUIT BUSHING SHALL BE INCIDENTAL TO THE HANDHOLE.

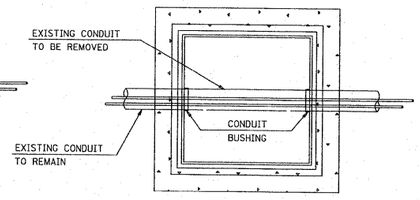

PLAN

DETAIL
HANDHOLE TO INTERCEPT EXISTING CONDUIT
N.T.S.

REVISIONS	
NAME	DATE

ILLINOIS DEPARTMENT OF TRANSPORTATION

DISTRICT ONE
STANDARD TRAFFIC SIGNAL
DESIGN DETAILS

SCALE: VERT. NONE HORIZ.
DATE 09-11-2007

DRAWN BY: BL
CHECKED BY: ER/TC

F.A.P. RTE.	SECTION	COUNTY	TOTAL SHEETS	SHEET NO.
341	32-2-R-N	COOK	53	19
		CONTRACT NO. 60E64		
FED. ROAD DIST. NO.	ILLINOIS	FED. AID PROJECT		

FILE NAME = P:\P-07-1600-5\Design\Design\SHT004.DGN	USER NAME = $USER$	DESIGNED - NB/TCM	REVISED -
		DRAWN - NB/TCM	REVISED -
	PLOT SCALE = 60.0001 ' / IN.	CHECKED - NB/TCM	REVISED -
	PLOT DATE = 3/17/2009	DATE - 03/18/2009	REVISED -

STATE OF ILLINOIS
DEPARTMENT OF TRANSPORTATION

DISTRICT ONE
STANDARD TRAFFIC SIGNAL DESIGN DETAILS

SCALE: NTS | SHEET NO. 4 OF 4 SHEETS | STA. | TO STA.