F.A.I. RTE.	SECTION	COUNTY	TOTAL SHEETS	SHEET NO.
94	1717 I-7	COOK	47	31
STA. 1259+91.12		TO STA. 1270+24.39		
FED. ROAD DIST. NO.	ILLINOIS	FED. AID PROJECT		

62979

F.A.I. RTE.	SECTION	COUNTY	TOTAL SHEETS	SHEET NO.
94	2005-069 LS	COOK	60	46
STA. 2254+81 (NB I-94) 1255+15 (SB I-94)		TO STA. 2267+45 (NB I-94) 1263+40 (SB I-94)		
FED. ROAD DIST. NO.	ILLINOIS	FED. AID PROJECT		

60A75

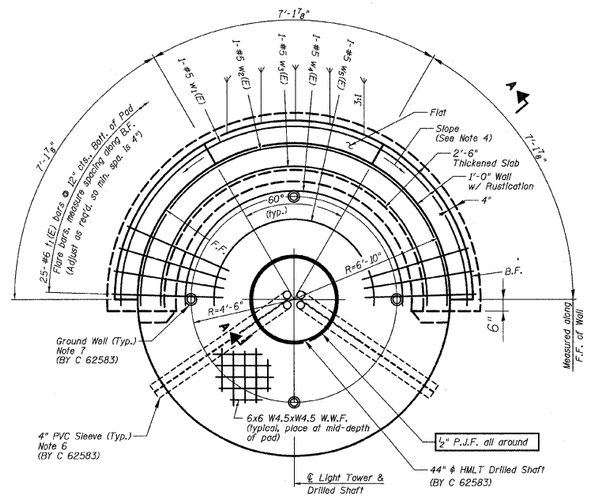

PLAN VIEW

Place Bars w_1(E) thru w_9(E) @ 12" cts., Bott. of Pad
(HMLT 6PAB4 at Sta. 1260+65.65 SB I-94 ℄)
(HMLT 6OCD2 at Sta. 1255+99.67 SB I-94 ℄)

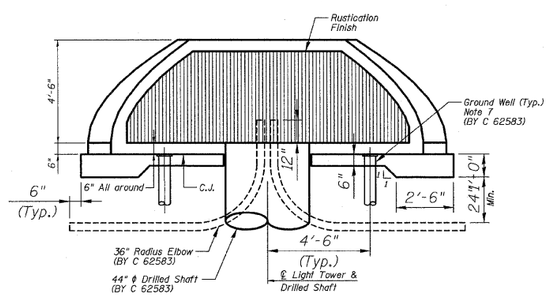

ELEVATION VIEW

(HMLT not shown for clarity)
(HMLT 6PAB4 at Sta. 1260+65.65 SB I-94 ℄)
(HMLT 6OAB1 at Sta. 1255+99.67 SB I-94 ℄)

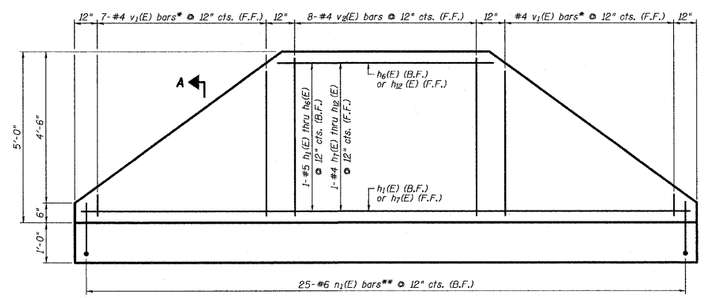

* Cut to fit, use remainder of bars at opposite end of wall. See Cutting Diagram, Sheet 26 of 49.
** Cut to fit where necessary, discard excess.

5'-0" RETAINING WALL ELEVATION (PROJECTED)

(Looking at F.F.)
(HMLT 6PAB4 at Sta. 1260+65.65 SB I-94 ℄)
(HMLT 6OCD2 at Sta. 1255+99.67 SB I-94 ℄)

NOTES

1. F.F. and B.F. denote Front Face and Back Face, respectively.
2. HMLT denotes High Mast Light Tower.
3. Refer to HMLT Service Pad, Special & Retaining Wall Details 2 for Bar Bending Diagrams, Bill of Material, Bar Sections and Details.
4. T/Wall slope is constant along the arc of any given radius.
5. Place horizontal tails of n_1 (E) bars radially.
6. PVC sleeves must be extended 6 inches by Contract 62583 beyond the edge of the concrete pad.
7. Ground wells 4'-6" as measured from centerline of the HMLT to centerline of the well to be installed by Contract 62583. Adjust service pad reinforcement to miss wells. Any necessary vertical adjustments will be performed by the contractor who installed the ground wells at the specific location.

REVISIONS	
NAME	DATE

ILLINOIS DEPARTMENT OF TRANSPORTATION
F.A.I. 94 (DAN RYAN EXPRESSWAY)
HIGH MAST LIGHT TOWER SERVICE PAD, SPECIAL & RETAINING WALL DETAILS SHEET 1 OF 2

S.N.
SCALE: N.T.S.
DATE: JUNE 20, 2008
DESIGNED BY: MAF
DRAWN BY: MAF
CHECKED BY: PF

TY·LIN INTERNATIONAL

FOR INFORMATION ONLY

REVISIONS	
NAME	DATE

ILLINOIS DEPARTMENT OF TRANSPORTATION
F.A.I. 94 (DAN RYAN EXPRESSWAY)
HIGH MAST LIGHT TOWER SERVICE PAD, SPECIAL & RETAINING WALL DETAILS
SHEET 1 OF 2
FOR INFORMATION ONLY

SCALE: N.T.S.
DATE: OCTOBER 17, 2008
DRAWN BY: JDF
CHECKED BY: JPM

TY·LIN INTERNATIONAL

p:\0237_3\rodd\c26c\mc22cdf.std\3a_hmlt.dgn 10/16/2008 4:06:58 PM