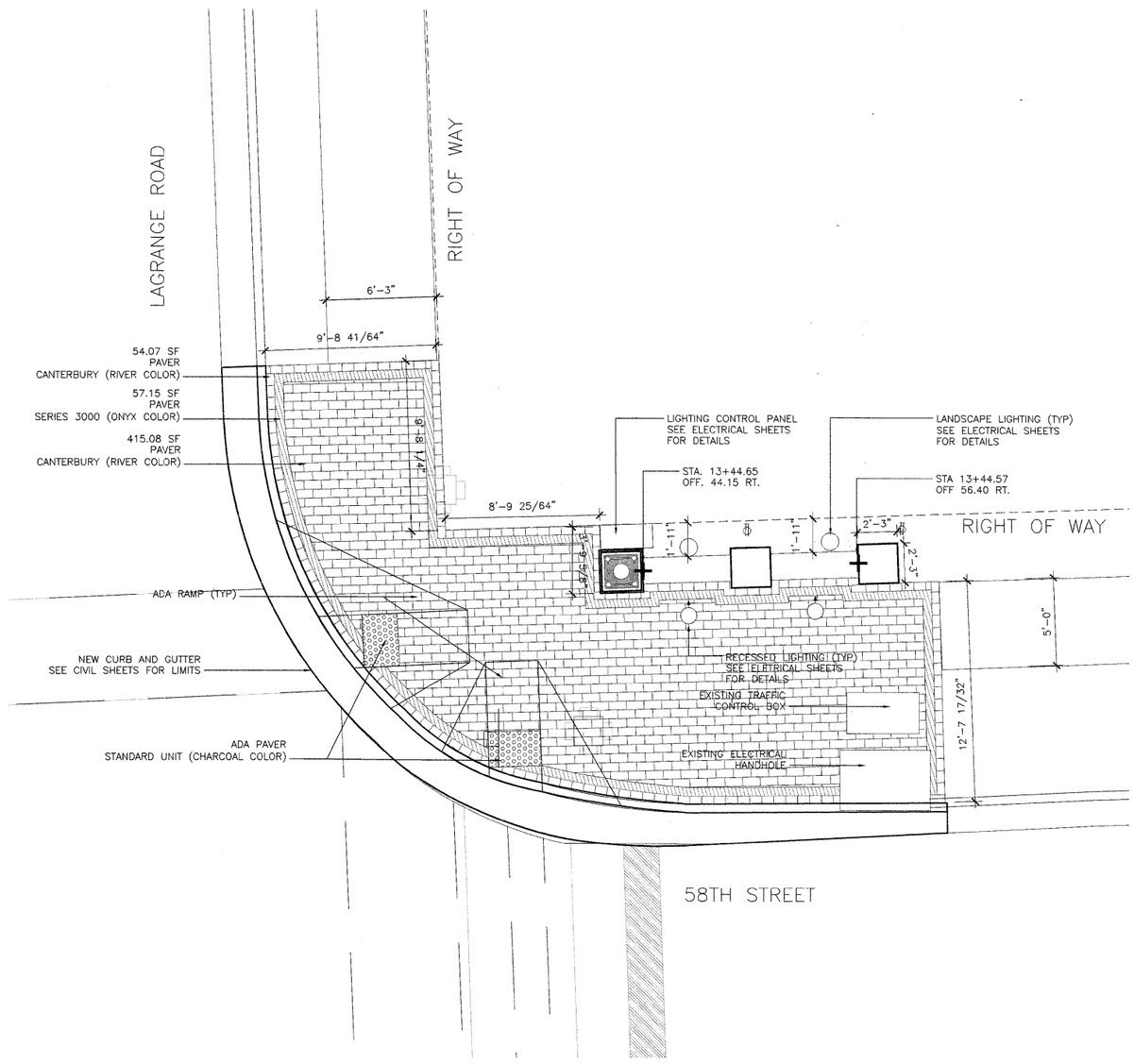

1 58TH STREET INTERSECTION - NORTHEAST QUADRANT - PLAZA ENLARGEMENT

SCALE 1/8"=1'-0"

north

NOTE: OUTSIDE COURSE OF PAVERS IN PLAZA TO BE SOLDIER COURSE RECTANGULAR PAVERS AS CALLED OUT IN LANDSCAPE DETAILS SHEET. FINAL LAYOUT TO BE DETERMINED IN FIELD BY CONTRACTOR AND APPROVED BY LANDSCAPE ARCHITECT.

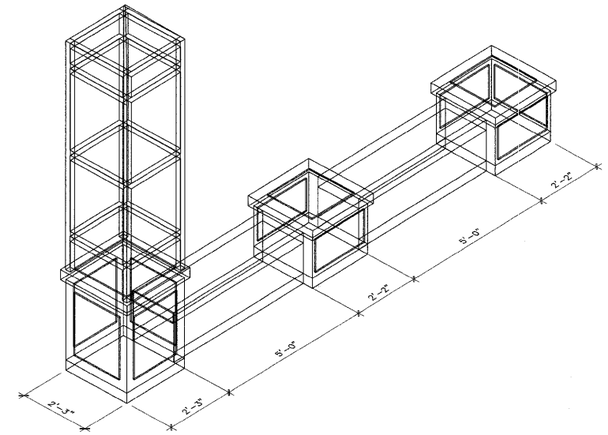

2 58TH STREET INTERSECTION - NORTHEAST QUADRANT - SEATWALL ISOMETRIC

SCALE 1/4"=1'-0"

NOTE: FINAL SEATWALL/PILLAR/PYLON/UNIT PAVER LOCATIONS AND DIMENSIONS TO BE DETERMINED IN FIELD BY CONTRACTOR AND APPROVED BY LANDSCAPE ARCHITECT.

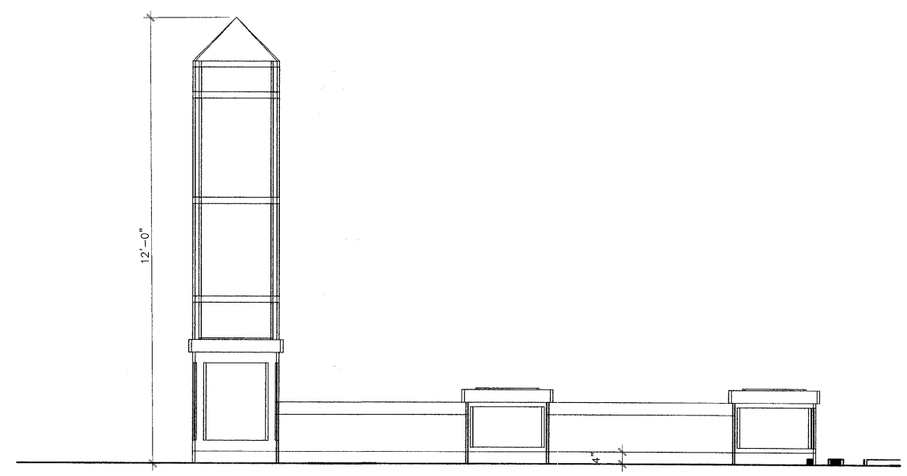

3 58TH STREET INTERSECTION - NORTHEAST QUADRANT - SEATWALL ELEVATION

SCALE 1/2"=1'-0"

TENG

TENG & ASSOCIATES, INC.
ENGINEERS/ARCHITECTS/PLANNERS
205 N. MICHIGAN AVE. CHICAGO, IL 60601
TELEPHONE: 312/616-0000

FILE NAME = $FILEL$	USER NAME = $USER$	DESIGNED —	REVISED — .
		DRAWN — ICJ	REVISED — .
	PLOT SCALE = $SCALE$	CHECKED — BS	REVISED — .
	PLOT DATE = 8/22/08	DATE — 4/30/09	REVISED — .

STATE OF ILLINOIS
DEPARTMENT OF TRANSPORTATION

58TH STREET INTERSECTION
NORTHEAST QUADRANT-HARDSCAPE DETAILS

SCALE: STA. TO STA.

F.A. RTE.	SECTION	COUNTY	TOTAL SHEETS	SHEET NO.
RTE.	07-00035-00-LS	COOK	42	16
		CONTRACT NO. 63059		

FED. ROAD DIST. NO. 1 | ILLINOIS | FED. AID PROJECT

C:\JC-WorkSpace\MURPHY_JTW-Fs-0044_D-Trans_07\2202\20433-001\Arch\CAD\01 Design\1A Teng\Sheet\58th\la011A001_58THNE.dwg
04-30-2009 11:41:30 (XREF) ..\..\..\..\Civil\CAD\01 Design\1A Teng\Xref\ca011A000.dwg (XREF) ..\..\..\..\COMMON\CAD\01 Design\1A Teng\Xref\la011A001.dwg (XREF) ..\..\Xref\la011A001.dwg (XREF) ..\..\Xref\lp011A001.dwg (XREF) ..\..\..\..\..\COMMON\CAD
\01 Design\1A Teng\Xref\ba011A001.dwg (XREF) .. MON\CAD\01 Design\1A Teng\Xref (XREF) .. il\CAD\01 Design\1A Teng\Xref\