GENERAL & CONSTRUCTION NOTES:

1. ELECTRICAL WORK SHALL CONFORM WITH NATIONAL, STATE, AND LOCAL CODES.
2. CONTRACTOR SHALL FIELD VERIFY EXACT LOCATIONS, QUANTITIES, AND TYPE OF UTILITIES IN AREAS TO BE EXCAVATED PRIOR TO COMMENCEMENT OF ANY WORK AND SHALL HAND EXCAVATE AS REQUIRED IN ORDER TO NOT INTERRUPT ANY EXISTING SERVICES. IF IN PERFORMING WORK DAMAGE TO EXISTING UTILITIES OCCURS, CONTRACTOR SHALL NOTIFY UTILITY IMMEDIATELY AND PAY ANY COST INCURRED FOR REPAIR OR REPLACEMENT.
3. ELECTRICAL EQUIPMENT, RACEWAY, ETC. ARE SHOWN IN APPROXIMATE LOCATIONS ONLY. CONTRACTOR SHALL INSTALL ELECTRICAL EQUIPMENT, RACEWAYS, ETC. WHERE DIRECTED BY THE ENGINEER IN ORDER TO BEST SUIT JOB CONDITIONS.
4. CONDUIT SHALL BE 1" PVC. SCHED. 40, UNLESS OTHERWISE NOTED.
5. ALL CONDUIT CROSSING UNDER PAVEMENT SHALL BE 1" PVC. SCHED. 80.
6. THE GROUND CONDUCTOR SHALL HAVE NO SPLICE OR KINKS BELOW GRADE, IT SHALL BE SOLIDLY CONNECTED TO THE GROUNDING LUG OF EACH POLE AND TO THE GROUND ROD AT THE SERVICE INSTALLATION.
7. ALL LUMINAIRE AND THE STREET LIGHT CONTROLLERS SHALL BE CONNECTED TO A CONTINOUS GROUND CONSISTING OF A GREEN INSULATED ELECTRICAL CONDUCTOR 600 V. XLP, SIZE AS INDICATED ON PLANS. THIS CONDUCTOR SHALL BE PLACED INSIDE THE CONDUIT ALONG WITH THE INSULATED CABLES.
8. THE COST FOR THE ELECTRIC SERVICE CONNECTION SHALL BE PAID FOR IN ACCORDANCE WITH ARTICLE 109.05.
9. JUNCTION BOXES OF "SLIGHTLY" DIFFERENT SIZES THAN THOSE SPECIFIED ON THE PLANS MAY BE USED WHEN APPROVED BY THE ENGINEER AT NO ADDITIONAL COST TO THE CONTRACT. THIS SHALL NOT RELIEVE THE CONTRACTOR TO CONFORM WITH APPLICABLE CODES.
10. THE LUMINAIRE SHALL BE LITHONIA MODEL VGR4C, OR EQUAL APPROVED BY THE ENGINEER.

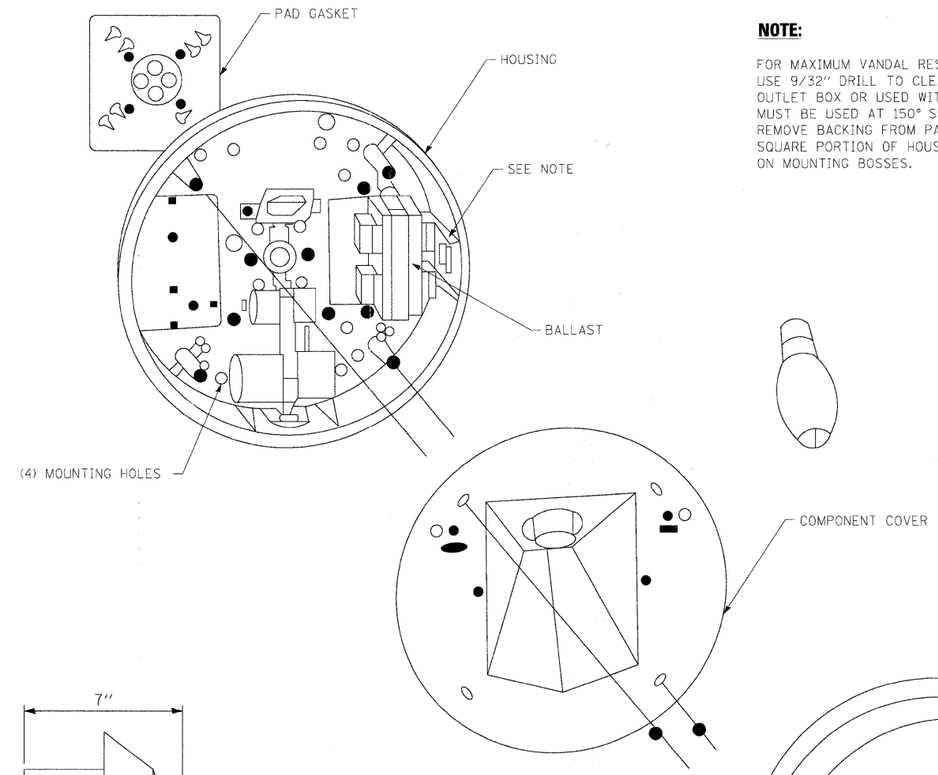

NOTE:

FOR MAXIMUM VANDAL RESISTANCE, USE (4) MOUNTING HOLES PROVIDED. USE 9/32" DRILL TO CLEAR MOUNTING HOLES. MAY BE MOUNTED OVER OUTLET BOX OR USED WITH SURFACE CONDUIT WIRE ENTRY. 150°C WIRE MUST BE USED AT 150° SURFACE CONDUIT ENTRY PORT AS LABELED. REMOVE BACKING FROM PAD GASKET PROVIDED AND PLACE ON BACK SQUARE PORTION OF HOUSING. PLACE (4) SMALL CIRCULAR GASKETS ON MOUNTING BOSSES.

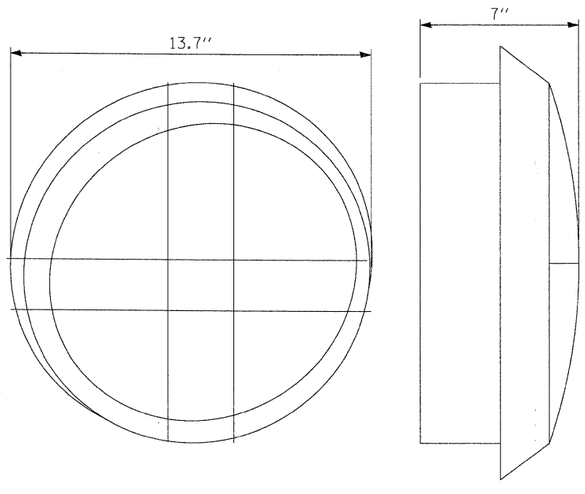

LUMINAIRE DIMENSIONS

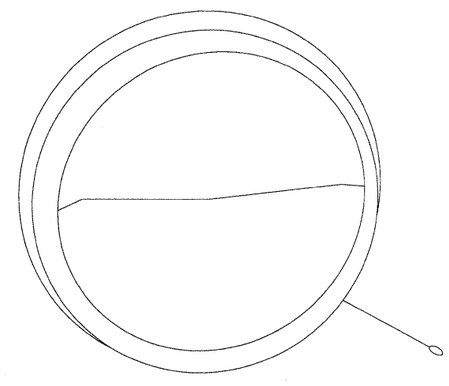

LUMINAIRE INSTALLATION DETAIL

x:\39026\3944\engineering documents\Lighting\erplh. ABC Underpass Det. 01.dgn

FILE NAME = $FILES$	USER NAME = $USER$	DESIGNED - GHT	REVISED -
		DRAWN - VLM	REVISED -
	PLOT SCALE = 20.0000 ' / IN.	CHECKED - GHT	REVISED -
	PLOT DATE = 3/30/2009	DATE - 3/31/09	REVISED -

KANE COUNTY
DIVISION OF TRANSPORTATION

UNDERPASS LIGHTING PLAN
MIXED USE PATH UNDERPASS (LIGHTING DETAILS)

SCALE: | SHEET NO. OF SHEETS | STA. TO STA.

F.A. RTE.	SECTION	COUNTY	TOTAL SHEETS	SHEET NO.
361	06-00214-15-BR	KANE/DUPAGE	545	273
		CONTRACT NO. 63074		
FED. ROAD DIST. NO.	ILLINOIS	FED. AID PROJECT		