STATE OF ILLINOIS
DEPARTMENT OF TRANSPORTATION

ROUTE NO.	SECTION	COUNTY	TOTAL SHEETS	SHEET NO.
-	-	KANE	545	297
-	-			
FED. ROAD DIST. NO. 7		ILLINOIS	FED. AID PROJECT-	

SHEET SA- 10 OF 14 SHEETS

Contract #63074

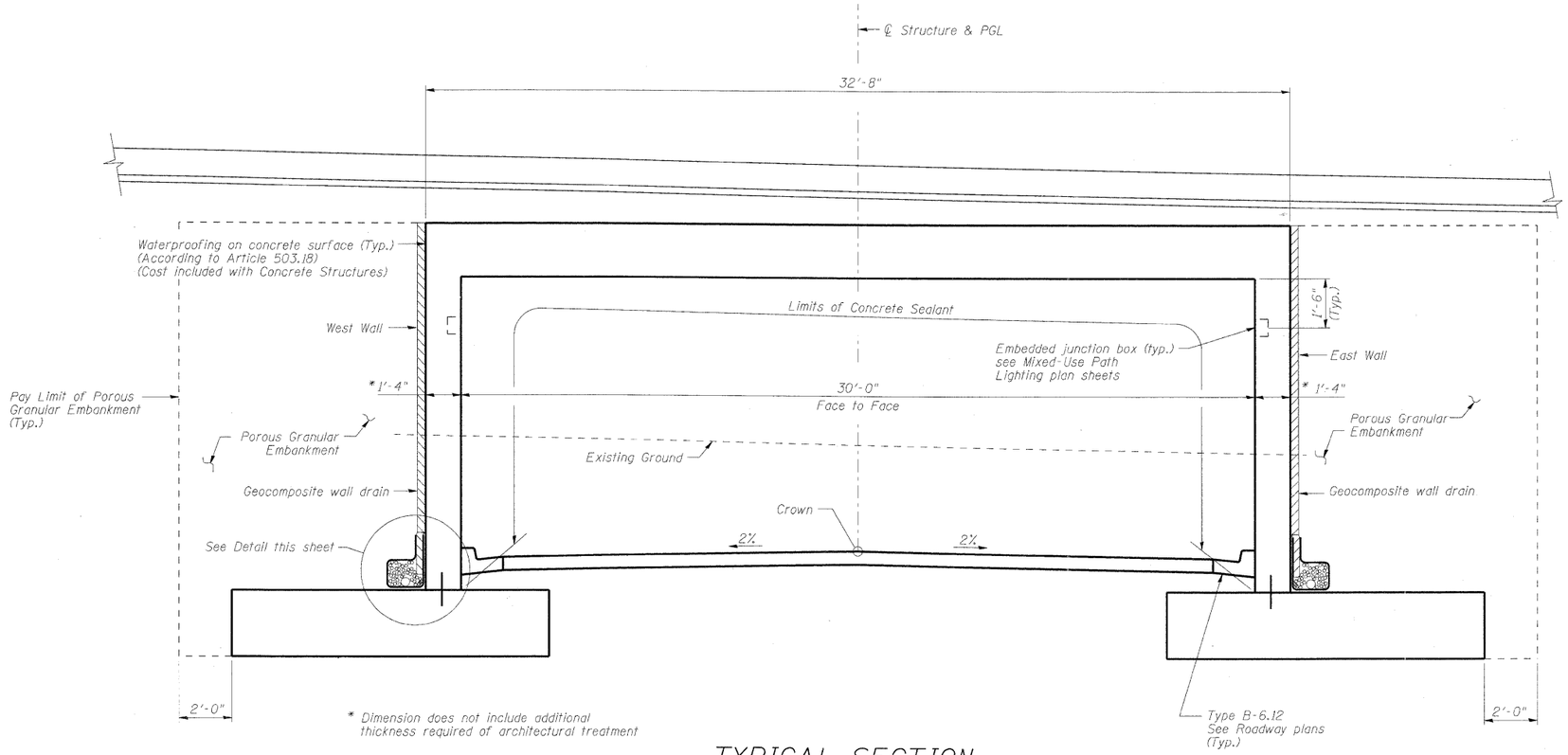

* Dimension does not include additional thickness required of architectural treatment

TYPICAL SECTION

(Looking North)

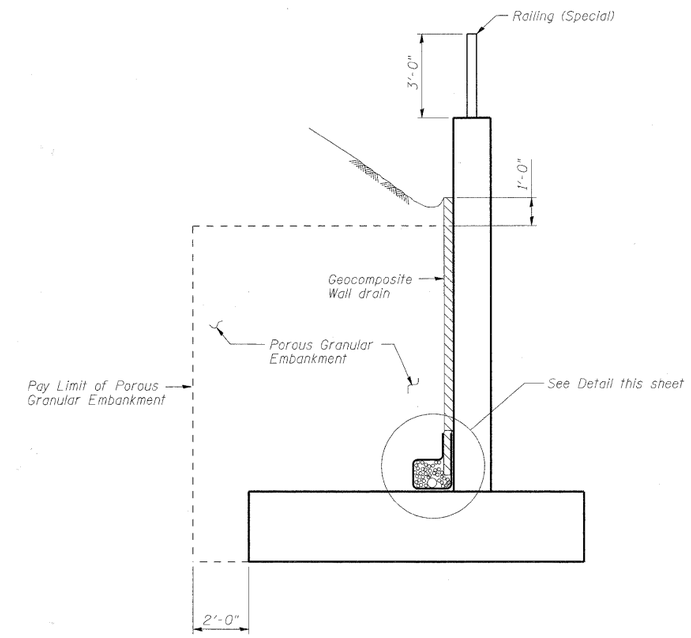

TYPICAL WINGWALL SECTION

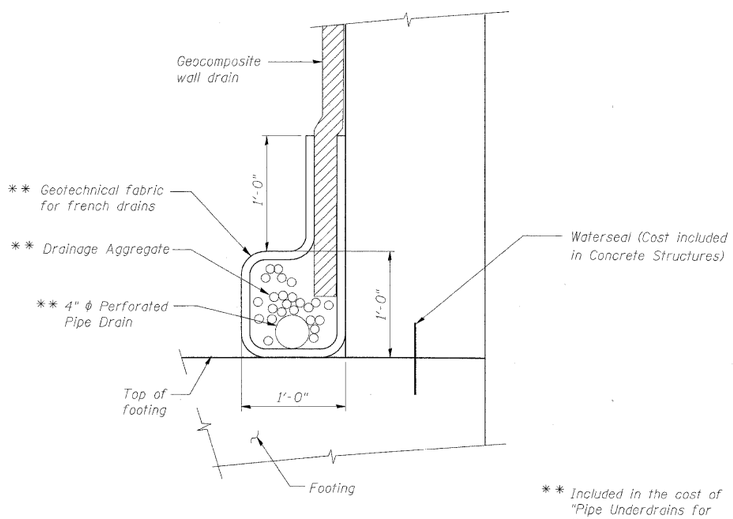

** Included in the cost of "Pipe Underdrains for Structures"

PIPE UNDERDRAIN DETAIL

BILL OF MATERIAL

Item	Unit	Stage 1	Stage 2
Geocomposite Wall Drain	Sq. Yd.	238	268
Porous Granular Embankment	Cu. Yd.	614	686
Pipe Underdrains for Structures 4"	Foot	191	196

DESIGNED	AAY
CHECKED	AJK
DRAWN	VH
CHECKED	HMA/DMC

benesch
alfred benesch & company
Engineers • Surveyors • Planners
205 North Michigan Avenue, Suite 2400
Chicago, Illinois 60601
312-565-0450
Job # 3944

DRAINAGE DETAILS
MULTI-USE PATH UNDER
IL 25/STEARNS ROAD
F.A.P. 360 - SEC. 06-00214-15-BR
KANE COUNTY
STATION 916+09.93
STRUCTURE NO. 045-3173

x:\3900s\3944\engineering_documents\Dunham_Path_under_Stearns_SN045-3173\Final\0453173-63074-010-drain.dgn
11:19:40 AM
3/30/2009