PANEL SIGN DESIGN TYPE 2

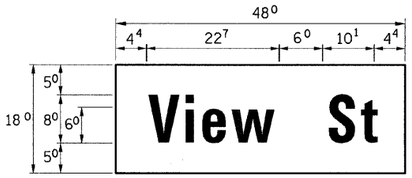

MA-1

6.0 Sq. Ft each

2 Required

Design Series D

PANEL SIGN DESIGN TYPE 3

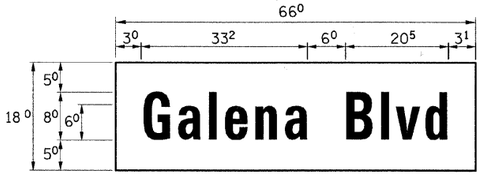

MA-2

8.25 Sq. Ft each

2 Required

Design Series D

SUPPORTING CHANNELS

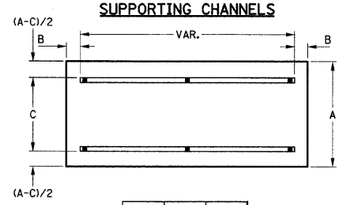

A	B	C
18″	2″	12″
30″	2″	22″

SIGNFIX ALUMINUM CHANNEL FRAMING SYSTEM shall be used. See Note #5

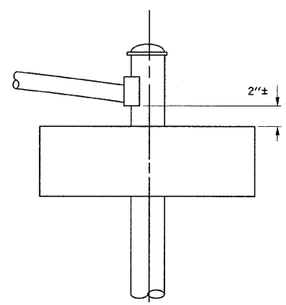

SINGLE ARM

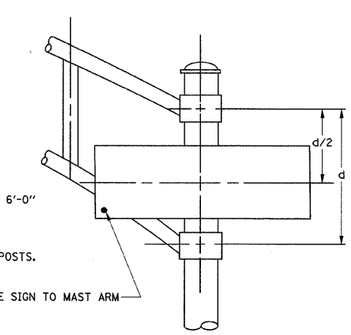

DUAL ARM

GENERAL NOTES

1. WHERE MAST ARM MOUNTED STREET NAME SIGNS ARE SPECIFIED, THE MAST ARM AND POLES SHALL BE DESIGNED TO SUPPORT THE LOADINGS CALLED FOR ON STANDARDS 2374 THROUGH 2377, AS APPLICABLE, PLUS A 2′-6″ BY 6′-0″ SIGN PANEL MOUNTED AS SHOWN. THE DESIGN SHALL BE IN ACCORDANCE WITH THE REQUIREMENTS OF THE CURRENT "STANDARD SPECIFICATIONS FOR STRUCTURAL SUPPORTS FOR HIGHWAY SIGNS, LUMINAIRES, AND TRAFFIC SIGNALS" AS PUBLISHED BY THE AMERICAN ASSOCIATION OF STATE HIGHWAY AND TRANSPORTATION OFFICIALS FOR 80 M.P.H. WIND VELOCITY.
2. ALL SIGNS SHALL HAVE A WHITE REFLECTORIZED LEGEND AND BORDER ON A GREEN REFLECTORIZED BACKGROUND, TYPE A SHEETING.
3. THE SIGN LENGTH SHOULD BE INCREASED IN 6-INCH INCREMENTS, BUT THE OVERALL LENGTH SHOULD NOT EXCEED 6′-0″
4. ALL BORDERS SHALL BE ¾″ WIDE AND CORNER RADIUS SHALL BE 2¼″.
5. SIGNFIX ALUMINUM CHANNEL FRAMING SYSTEM SHALL BE USED FOR ALL SIGNS ATTACHED TO SIGNAL POLES AND POSTS.

LOCAL SUPPLIERS OF THE SIGNFIX ALUMINUM CHANNEL FRAMING SYSTEM ARE:

- A.K.T. CORPORATION
  SCHAUMBURG, IL.
- AMERICAN FABRICATION CO.
  CHICAGO HEIGHTS, IL.
- TUCKER COMPANY, INC.
  WAUWATOSA, WI.
- WESTERN TRAFFIC CONTROL, INC.
  CICERO, IL.

PARTS LISTING:

SIGN CHANNEL	PART 3HPN053 (MED. CHANNEL)
SIGN SCREWS	¼″ X 14 X 1″ H.W.H. #3 SELF TAPPING WITH NEOPREAM WASHER
BRACKETS	PART #HPN034 (UNIVERSAL) CHANNEL CLAMPS WITH STAINLESS STEEL STRAPPING

OTHER BRANDS OF MOUNTING HARDWARE ARE ACCEPTABLE, BASED UPON THE DEPARTMENT'S APPROVAL AND COMPATIBILITY WITH THE CHANNEL/BRACKET OF THE ABOVE PRODUCT.

Upper Case To Lower Case

Spacing Chart 8-6 Inch Series "C & D"

FIRST LETTER	SECOND LETTER: a c d e g o q		b h i k l m n p r u		f w		j		s t		v y		x		z	
SERIES	C	D	C	D	C	D	C	D	C	D	C	D	C	D	C	D
A W X	1^2	1^4	1^4	1^5	1^2	1^4	0^6	1^0	1^1	1^4	0^6	1^0	1^1	1^2	1^2	1^4
B	1^4	1^5	2^0	2^1	1^4	1^5	1^1	1^2	1^4	1^5	1^2	1^4	1^2	1^4	1^6	1^7
C E G	1^4	1^5	2^0	2^1	1^2	1^4	0^6	1^0	1^2	1^4	1^2	1^4	1^4	1^5	1^4	1^5
D O Q R	1^4	1^5	2^0	2^1	1^4	1^5	0^6	1^0	1^2	1^4	1^2	1^4	1^4	1^5	1^4	1^5
F	0^5	0^6	1^4	1^5	0^6	1^0	0^5	0^6	0^6	1^0	0^6	1^0	0^6	1^0	1^1	1^2
H I M N	2^0	2^1	2^2	2^4	2^0	2^1	1^4	1^5	1^6	1^7	1^6	1^7	2^0	2^1	2^0	2^1
J U	2^0	2^1	2^0	2^1	1^6	1^7	1^4	1^5	1^6	1^7	1^6	1^7	1^6	1^7	2^0	2^1
K L	1^1	1^2	1^6	1^7	1^1	1^2	0^5	0^6	1^1	1^2	1^1	1^2	1^1	1^2	1^2	1^4
P	1^2	1^4	1^4	1^5	1^2	1^4	0^5	0^6	1^1	1^2	1^1	1^2	1^2	1^4	1^2	1^4
S	1^2	1^4	1^6	1^7	1^2	1^4	0^6	1^0	1^2	1^4	1^2	1^4	1^2	1^4	1^2	1^4
T	1^1	1^2	1^6	1^7	0^6	1^0	0^6	1^0	1^1	1^2	1^1	1^2	1^1	1^2	1^2	1^4
V	0^6	1^0	1^4	1^5	1^1	1^2	0^6	1^0	1^2	1^4	1^2	1^4	1^2	1^4	1^2	1^4
Y	0^5	0^6	1^4	1^5	0^6	1^0	0^5	0^6	0^5	0^7	0^5	0^6	0^6	1^0	1^1	1^2
Z	1^6	1^7	2^2	2^4	1^6	1^7	1^2	1^4	1^6	1^7	1^6	1^7	1^6	1^7	2^0	2^1

Lower Case To Lower Case

Spacing Chart 6 Inch Series "C & D"

FIRST LETTER	SECOND LETTER: a c d e g o q		b h i k l m n p r u		f w		j		s t		v y		x		z	
SERIES	C	D	C	D	C	D	C	D	C	D	C	D	C	D	C	D
a d h g l j i m n q u	1^6	1^7	2^2	2^4	1^6	1^7	1^2	1^4	1^4	1^5	1^4	1^5	1^6	1^7	1^6	1^7
b f k o p s	1^2	1^4	1^6	1^7	1^1	1^2	0^5	0^6	1^1	1^2	1^1	1^2	1^2	1^4	1^2	1^4
c e	1^2	1^4	1^6	1^7	1^2	1^4	0^6	1^0	1^2	1^4	1^2	1^4	1^2	1^4	1^2	1^4
r	0^6	1^0	1^2	1^4	0^6	1^0	0^3	0^3	0^5	0^6	0^5	0^6	0^6	1^0	0^6	1^0
t z	1^2	1^4	1^6	1^7	1^2	1^4	0^6	1^0	1^1	1^2	1^1	1^2	1^2	1^4	1^2	1^4
v y	1^1	1^2	1^4	1^5	1^1	1^2	0^5	0^6	0^6	1^0	0^6	1^0	1^1	1^2	1^1	1^2
w	1^1	1^2	1^4	1^5	1^1	1^2	0^5	0^6	1^1	1^2	1^1	1^2	1^1	1^2	1^2	1^4
x	1^2	1^4	1^6	1^7	1^1	1^2	0^5	0^6	1^1	1^2	1^1	1^2	1^1	1^2	1^2	1^4

Number To Number

Spacing Chart 8 Inch Series "C & D"

FIRST NUMBER	SECOND LETTER: 0		1		2		3		4		5		6		7		8		9	
SERIES	C	D	C	D	C	D	C	D	C	D	C	D	C	D	C	D	C	D	C	D
0 9	1^6	1^7	1^6	1^7	1^4	1^5	1^2	1^4	1^4	1^5	1^4	1^5	1^6	1^7	1^2	1^4	1^6	1^7	1^6	1^7
1	2^0	2^1	2^0	2^1	2^0	2^1	1^6	1^7	1^4	1^5	2^0	2^1	2^0	2^1	1^4	1^5	2^0	2^1	2^0	2^1
2 3 4	1^4	1^5	1^4	1^5	1^4	1^5	1^2	1^4	1^2	1^4	1^4	1^5	1^4	1^5	1^1	1^2	1^6	1^7	1^4	1^5
5	1^4	1^5	1^4	1^5	1^4	1^5	1^1	1^2	1^1	1^2	1^4	1^5	1^4	1^5	1^1	1^2	1^4	1^5	1^4	1^5
6	1^6	1^7	1^4	1^5	1^4	1^5	1^2	1^5	1^2	1^4	1^4	1^5	1^4	1^5	1^1	1^2	1^4	1^5	1^4	1^5
7	1^2	1^4	1^2	1^4	1^4	1^5	1^2	1^5	0^5	0^6	1^2	1^4	1^4	1^5	1^1	1^2	1^4	1^5	1^2	1^4
8	1^6	1^7	1^6	1^7	1^4	1^5	1^2	1^5	1^2	1^4	1^4	1^5	1^6	1^7	1^2	1^4	1^6	1^7	1^4	1^5

EXAMPLE, $2^{③}$ — DENOTES ⅜″

LETTERS	6 INCH UPPER CASE LETTERS SERIES C	6 INCH UPPER CASE LETTERS SERIES D	8 INCH UPPER CASE LETTERS SERIES C	8 INCH UPPER CASE LETTERS SERIES D	LETTERS	6 INCH LOWER CASE LETTERS SERIES C	6 INCH LOWER CASE LETTERS SERIES D
A	3^6	5^0	5^0	6^5	a	3^5	4^2
B	3^2	4^0	4^3	5^3	b	3^5	4^2
C	3^2	4^0	4^3	5^3	c	3^5	4^1
D	3^2	4^0	4^3	5^3	d	3^5	4^2
E	3^0	3^5	4^0	4^7	e	3^5	4^2
F	3^0	3^5	4^0	4^7	f	2^3	2^6
G	3^2	4^0	4^3	5^3	g	3^5	4^2
H	3^2	4^0	4^3	5^3	h	3^5	4^2
I	0^7	0^7	1^1	1^2	i	1^1	1^1
J	3^0	3^6	4^0	5^0	j	2^0	2^2
K	3^2	4^1	4^3	5^4	k	3^5	4^2
L	3^0	3^5	4^0	4^7	l	1^1	1^1
M	3^7	4^5	5^1	6^1	m	6^0	7^0
N	3^2	4^0	4^3	5^3	n	3^5	4^2
O	3^4	4^2	4^5	5^5	o	3^6	4^3
P	3^2	4^0	4^3	5^3	p	3^5	4^2
Q	3^4	4^2	4^5	5^5	q	3^5	4^2
R	3^2	4^0	4^3	5^3	r	2^6	3^2
S	3^2	4^0	4^3	5^3	s	3^6	4^2
T	3^0	3^5	4^0	4^7	t	2^7	3^2
U	3^2	4^0	4^3	5^3	u	3^5	4^2
V	3^5	4^4	4^7	6^0	v	4^2	4^7
W	4^4	5^2	6^0	7^0	w	5^5	6^4
X	3^4	4^0	4^5	5^3	x	4^4	5^1
Y	3^6	5^0	5^0	6^6	y	4^6	5^3
Z	3^2	4^0	4^3	5^3	z	3^6	4^3

NUMBER	6 INCH SERIES C	6 INCH SERIES D	8 INCH SERIES C	8 INCH SERIES D
1	1^2	1^4	1^5	2^0
2	3^2	4^0	4^3	5^3
3	3^2	4^0	4^3	5^3
4	3^5	4^3	4^7	5^7
5	3^2	4^0	4^3	5^3
6	3^2	4^0	4^3	5^3
7	3^2	4^0	4^3	5^3
8	3^2	4^0	4^3	5^3
9	3^2	4^0	4^3	5^3
0	3^4	4^2	4^5	5^5

PLAN	BY	DATE
SURVEYED		
PLOTTED		
ROADWAY CHECKED		
RT. OF WAY CHECKED		
CADD FILE NAME		
NOTE BOOK NO.		

PROFILE	BY	DATE
SURVEYED		
PLOTTED		
GRADES CHECKED		
B.M. NOTED		
STRUCTURE NOTAT'NS CHKD		
NOTE BOOK NO.		

FILE NAME =	USER NAME = _USER_	DESIGNED -	REVISED -
y:\jobs\smith\2007\070690 auro - traffic signals\070690.01 auro galena blvd traffic sig		DRAWN BAH	REVISED -
	PLOT SCALE = $SCALE$	CHECKED APS	REVISED -
	PLOT DATE = 4/15/2009	DATE -	REVISED -

STATE OF ILLINOIS
DEPARTMENT OF TRANSPORTATION

MAST ARM MOUNTED STREET NAME SIGNS

SCALE: | SHEET NO. OF SHEETS | STA. TO STA.

F.A. RTE.	SECTION	COUNTY	TOTAL SHEETS	SHEET NO.
	05-00257-00-TL	KANE	39	29
		CONTRACT NO. 63105		
FED. ROAD DIST. NO.	ILLINOIS	FED. AID PROJECT		