STATE OF ILLINOIS
DEPARTMENT OF TRANSPORTATION

ROUTE NO.	SECTION	COUNTY	TOTAL SHEETS	SHEET NO.
FAP Rte 614	144(B-1)	Cass & Mason	351	158
FED. ROAD DIST. NO. 7		ILLINOIS	FED. AID PROJECT-	

SHEET NO. 22
86 SHEETS

Contract #72A76

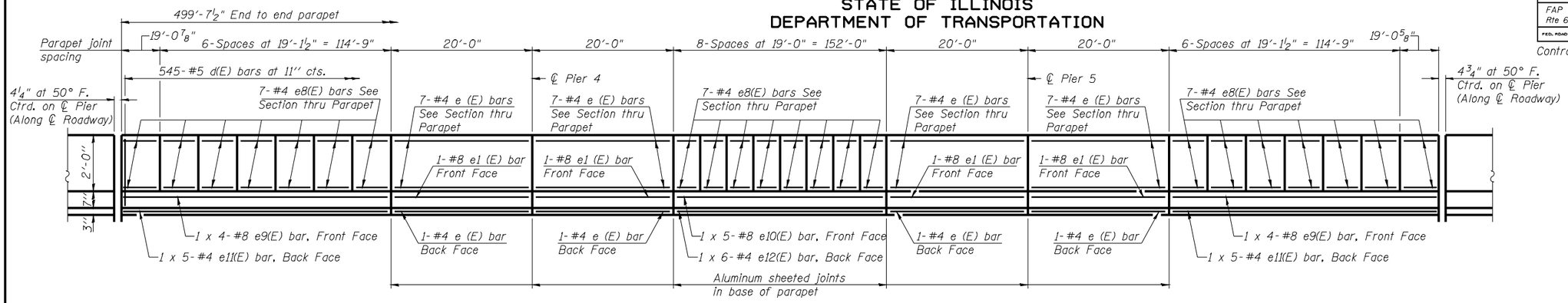

UNIT 2 - INSIDE ELEVATION OF EAST PARAPET

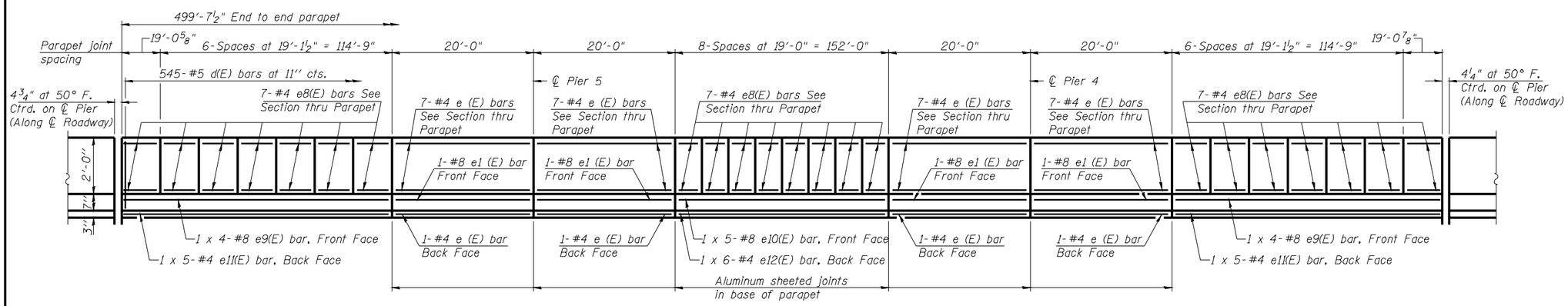

UNIT 2 - INSIDE ELEVATION OF WEST PARAPET

BILL OF MATERIAL
SUPERSTRUCTURE - UNIT 2

Bar	No.	Size	Length	Shape
d(E)	1521	#5	37'-0"	
a_1(E)	1836	#6	6'-0''	
a_5(E)	12	#5	9'-5"	
a_6(E)	4	#5	39'-9"	
a_7(E)	80	#5	1'-6"	
b(E)	1345	#5	30'-1"	
b_1(E)	82	#5	16'-2"	
b_3(E)	240	#6	36'-6"	
d(E)	1090	#5	5'-7''	
d_1(E)	1090	#5	7'-9"	
e(E)	64	#4	19'-9"	
e_1(E)	8	#8	19'-9"	
e_8(E)	308	#4	18'-9"	
e_9(E)	16	#8	35'-11"	
e_{10}(E)	10	#8	33'-1"	
e_{11}(E)	20	#4	27'-9"	
e_{12}(E)	12	#4	26'-5"	
x_2(E)	60	#5	5'-7"	
Reinforcement Bars, Epoxy Coated		Pound	156120	
Concrete Superstructure		Cu. Yds.	619.6	

Bars indicated thus 1 x 6-#4 etc. indicates 1 line of bars with 6 lengths per line.

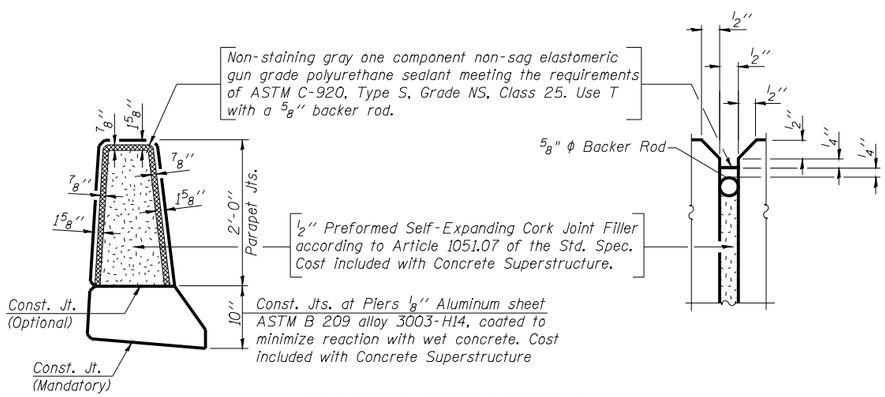

PARAPET JOINT DETAILS

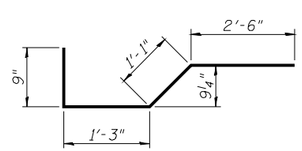

BAR x2(E)

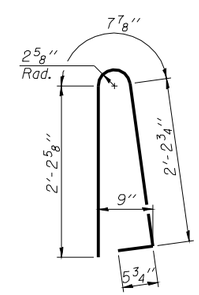

BAR d(E)

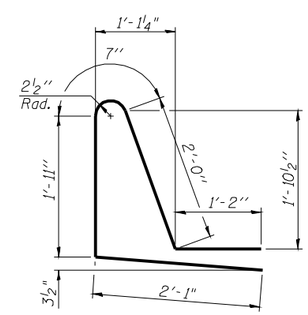

BAR d1(E)

MINIMUM BAR LAP

#4 bar = 1'-4" (Parapet)
#5 bar = 2'-2"
#6 bar = 2'-7"
#8 bar = 3'-5" (Parapet)

UNIT 2 - SUPERSTRUCTURE DTAILS
F.A.P. 614 (IL 78) OVER SANGAMON RIVER
PUBLIC WATERS
CASS & MASON COUNTIES
SECTION 144 (B-1)
STA. 913+26.00
STRUCTURE NUMBER 009-0510

PROFESSIONAL DESIGN FIRM LICENSE #184-001084

© Copyright Hanson Professional Services Inc. MS_YEAR

HANSON
Hanson Professional Services Inc.

JOB NO. 07S2026
DATE 03/27/09

LAYOUT	Rod	09/12/08
DRAWN	Rod	09/30/08
REVIEWED	TEH	09/30/08

Mon-31-2009 09:01:26 AM
c:\pw_work\PWIDOT\LANGHLIN\IL\d0314498-009-0510 Master Sheet Filed.dgn