FAI ROUTE	SECTION	COUNTY	TOTAL SHEETS	SHEET NO
70	*	MADISON	420	140
STA. 495+00		TO STA. 521+55		
CONTRACT NO. 76709				

* 60-10K, 60-10-4HB

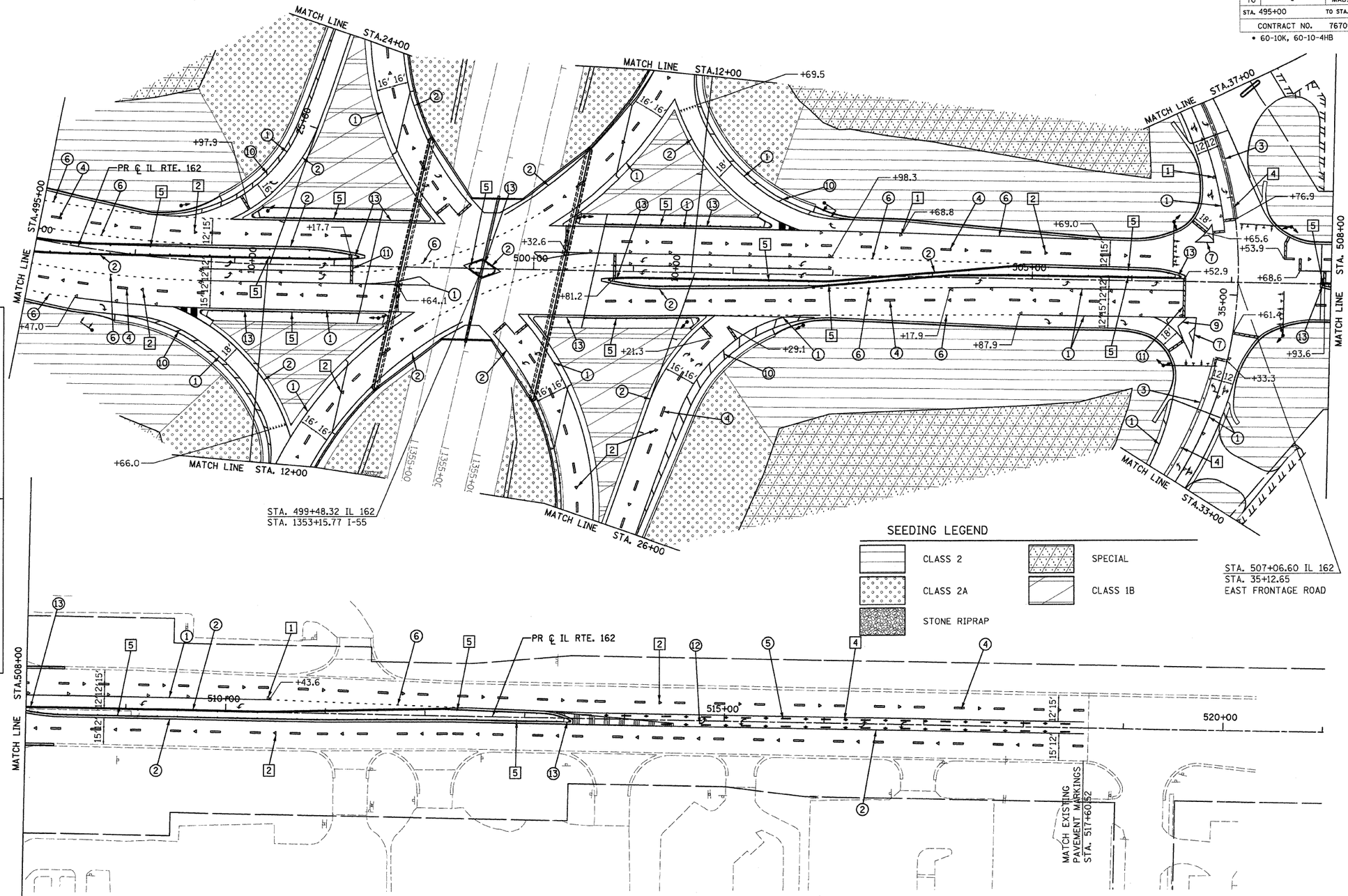

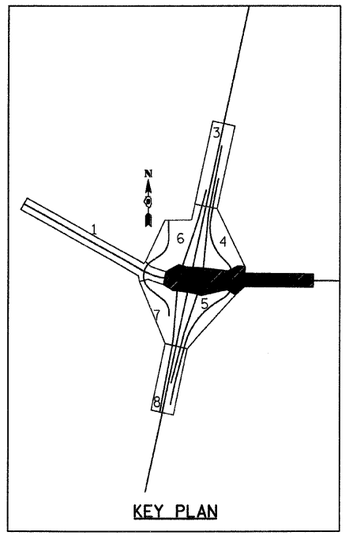

SEEDING LEGEND

- CLASS 2
- CLASS 2A
- STONE RIPRAP
- SPECIAL
- CLASS 1B

PAVEMENT MARKING LEGEND

1. 4" WHITE SOLID
2. 4" YELLOW SOLID
3. 4" DOUBLE YELLOW SOLID
4. 4" WHITE SKIP-DASH (10' 30' 10')
5. 4" YELLOW SKIP-DASH (10' 30' 10')
6. 4" WHITE DASHED (2' 6' 2')
7. 8" WHITE SOLID
8. 12" YELLOW DIAGONAL-20'C-C (45 20')
9. 12" WHITE DIAGONAL-20'C-C
10. 12" WHITE DIAGONAL-30'C-C (45 30')
11. 24" STOP BAR (TYP.)
12. TURN ARROW WHITE (8' 16' 8')
13. CURB MARKING (SEE DETAIL)

RAISED REFLECTIVE PAVEMENT MARKER LEGEND

1. CRYSTAL ONE-WAY-40'C-C
2. CRYSTAL ONE-WAY-80'C-C
3. AMBER ONE-WAY-40'C-C
4. AMBER TWO-WAY-40'C-C
5. PRISMATIC CURB REFLECTOR ON CURBS (SEE DETAIL)

50' 0 50' 100'
SCALE: 1" = 50'

REVISIONS	
NAME	DATE

ILLINOIS DEPARTMENT OF TRANSPORTATION

PROPOSED PAVEMENT MARKING AND SEEDING - 2

FAI ROUTE 70
SECTION 60-10K, 60-10-4HB
MADISON COUNTY

DRAWN BY: GRH

PLOT DATE: *DATE-TIME*

PLAN
NOTE BOOK NO.
SURVEYED
PLOTTED
ALIGNMENT CHECKED
RT. OF WAY CHECKED
CADD FILE NAME
BY
DATE

DATE-TIME
DGN-SPEC
*REF- 236cpm01.dgn
*REF- 236chz01.dgn
*REF- 236crw01.dgn
*REF- 236cab01.dgn
*REF- 236cal01.dgn
*REF- 236ctp01.dgn
*REF- seed legend.dgn