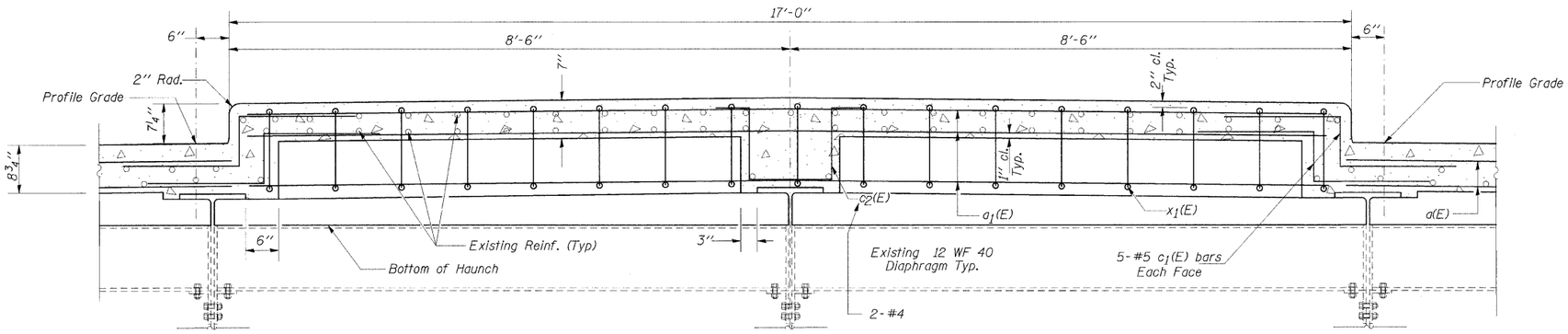

SECTION THRU MEDIAN

Dimensions measured @ Right Angles

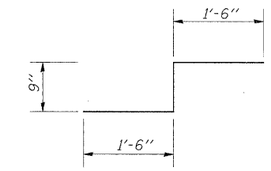

bar c_1(E)

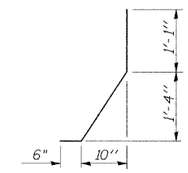

bar d_1(E)

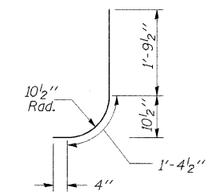

bar d(E)

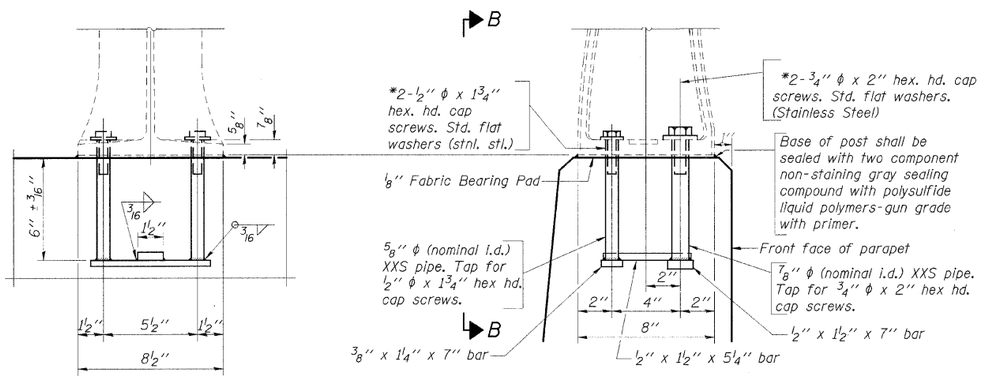

VIEW B-B

RAIL POST DETAILS

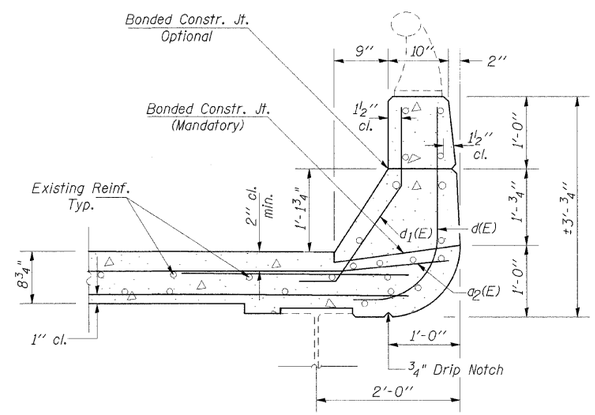

SECTION THRU PARAPET

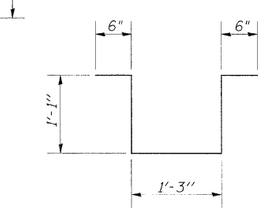

bar c_2(E)

Notes:

Work this sheet with sheet 8 of 20.

Post shall be normal to parapet.

*In lieu of the cast-in-place anchor device shown, the Contractor has the option of drilling and setting stainless steel anchor rods of the same diameter and grade as the specified cap screws according to Article 509.06 of the Standard Specifications. Embedment shall be according to the manufacturer's specifications.

Removal and and re-erection of the existing aluminum handrail, rail post, and all new applicable hardware, including labor and installation shall be included in the cost of Concrete Removal.

MEDIAN AND PARAPET DETAILS
PULASKI COUNTY
SN 077-0027

FILE NAME = c:\pw_work\PWIDOT\CORNELLLM\dms47925\064-0031-bsmart.dgn	USER NAME = cornelllm	DESIGNED -	REVISED -	STATE OF ILLINOIS DEPARTMENT OF TRANSPORTATION	MEDIAN AND PARAPET DETAILS SN 077-0027	F.A.I. RTE.	SECTION	COUNTY	TOTAL SHEETS / SHEET NO.
	PLOT SCALE = 1.5000 ' / IN.	DRAWN -	REVISED -			24/57	D9 BSMART FY09-1	JOHNSON/PULASKI	20 / 9
	PLOT DATE = 2/27/2009	CHECKED -	REVISED -					CONTRACT NO. 78095	
		DATE -	REVISED -		SCALE: SHEET NO. OF SHEETS STA. TO STA.	FED. ROAD DIST. NO.	ILLINOIS	FED. AID PROJECT	