F.A. RTE.	SECTION	COUNTY	TOTAL SHEETS	SHEET NO.
	07-00453-00-BR	SANGAMON	33	17
		CONTRACT NO. 93476		
FED. ROAD DIST. NO. 6	ILLINOIS	FED. AID PROJECT		

Sheet 3 of 9 Sheets

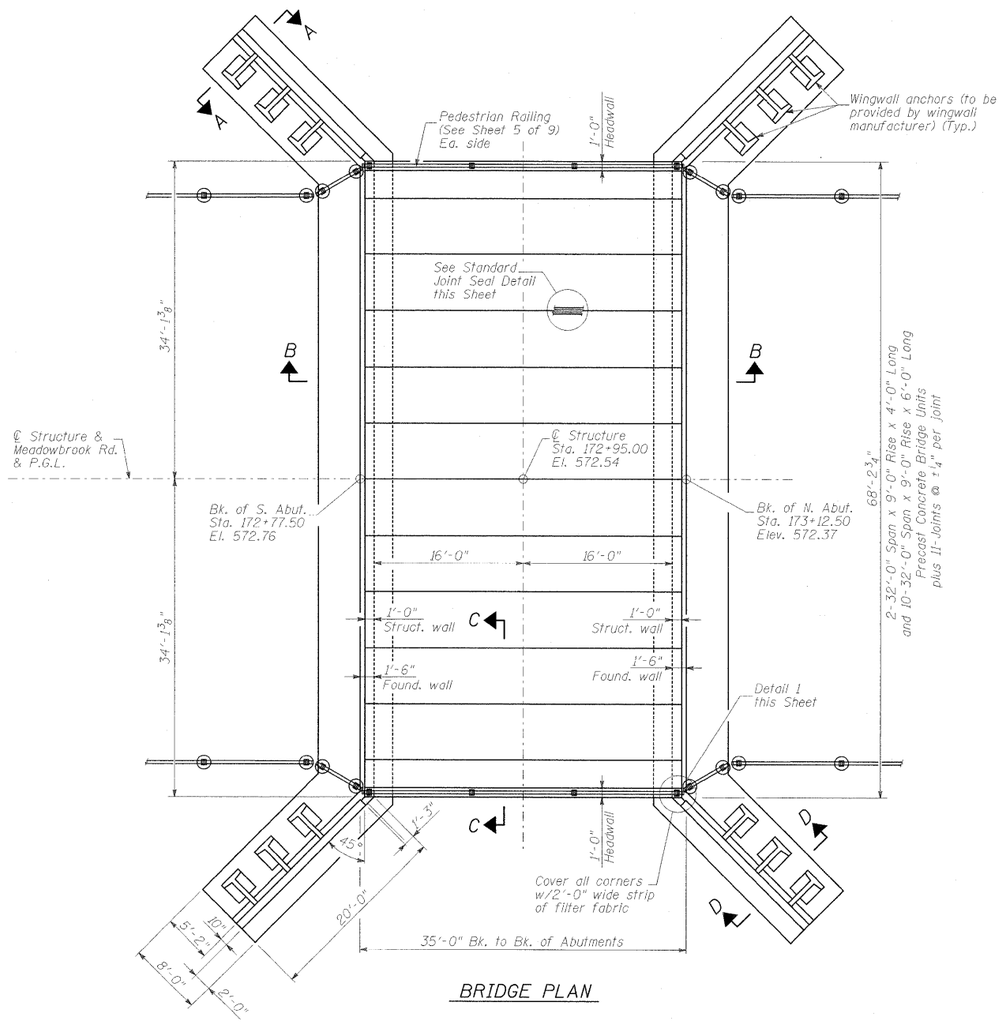

BRIDGE PLAN

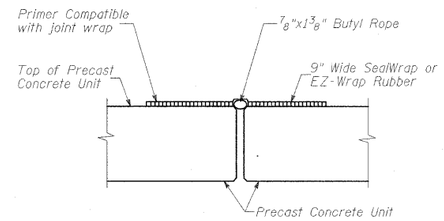

STANDARD JOINT SEAL DETAIL

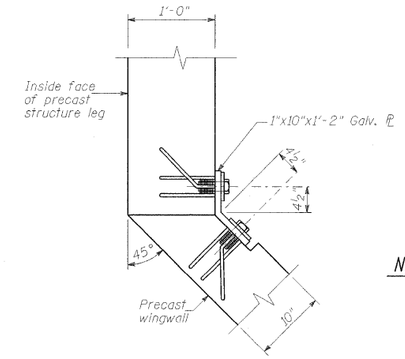

DETAIL - 1

NOTE:

Wingwall connectors to be provided by precast manufacturer.

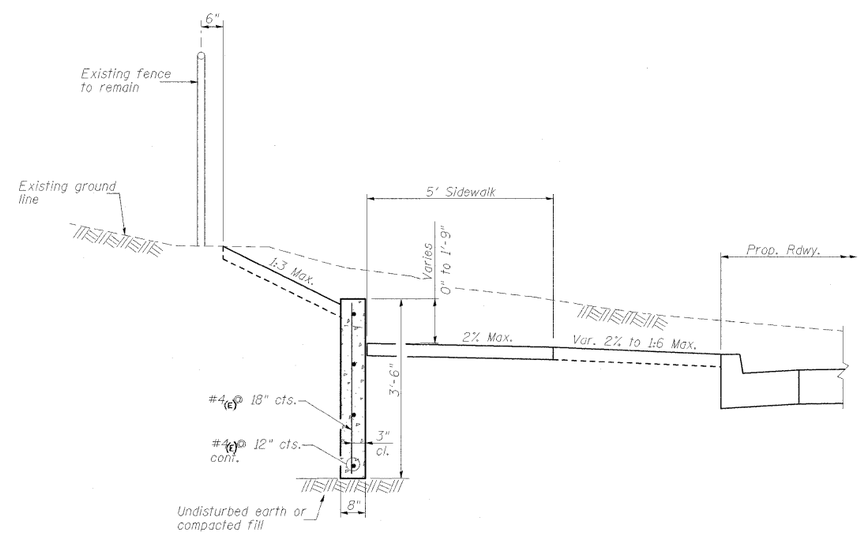

CONCRETE RETAINING WALL DETAIL

STA. 168+85.00, LT. TO STA. 169+70.00, LT.

(APPROX. QTY'S: Concrete Structures = 8.0 C.Y.
Reinforcement Bars, Epoxy Ct'd = 365 LBS.)

NOTES:

1. See Sheet 6 of 9 for Section A-A.
2. See Sheet 7 of 9 for Section D-D.
3. See Sheet 4 of 9 for End Elevation, Section B-B and Section C-C.

FILE NAME = ...\draw\sheets\Bridge Plan.dgn	USER NAME = Rob Heady	DESIGNED - WLB / WK	REVISED -
		DRAWN - GLD	REVISED -
	PLOT SCALE = 8.0000 ' / IN.	CHECKED - WLB	REVISED -
	PLOT DATE = 10/8/2008	DATE - 10/2008	REVISED -

MEADOWBROOK ROAD
CITY OF SPRINGFIELD
SPRINGFIELD, ILLINOIS

BRIDGE PLAN – RETAINING WALL
STATION 172+95.00 S.N. 084-6015
MEADOWBROOK RD. (TR 194) OVER SPRING CREEK TRIBUTARY

SCALE: N/A	SHEET NO. 17 OF 33 SHEETS	STA. N/A	TO STA. N/A