F.A. RTE.	SECTION	COUNTY	TOTAL SHEETS	SHEET NO.
	07-00453-00-BR	SANGAMON	33	18
		CONTRACT NO. 93476		
FED. ROAD DIST. NO. 6	ILLINOIS	FED. AID PROJECT		

Sheet 4 of 9 Sheets

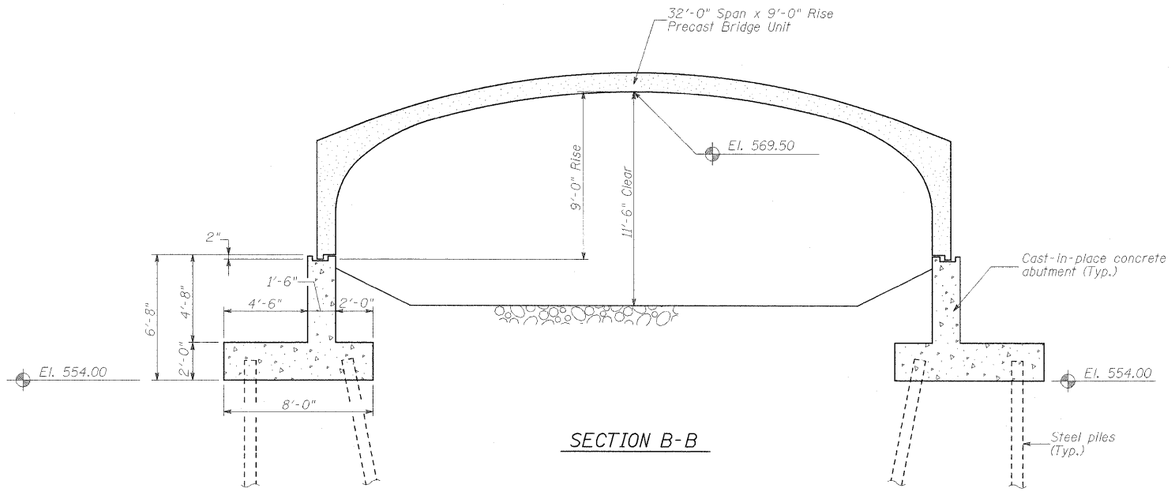

SECTION B-B

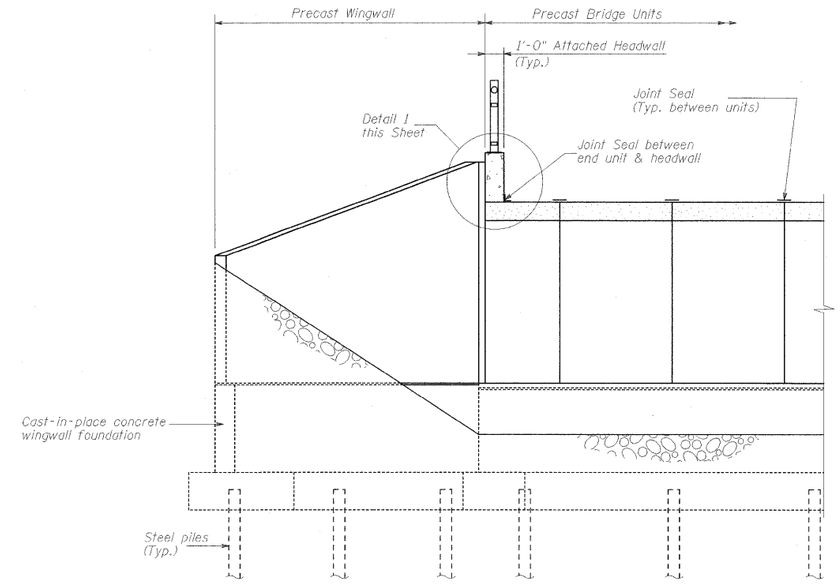

SECTION C-C

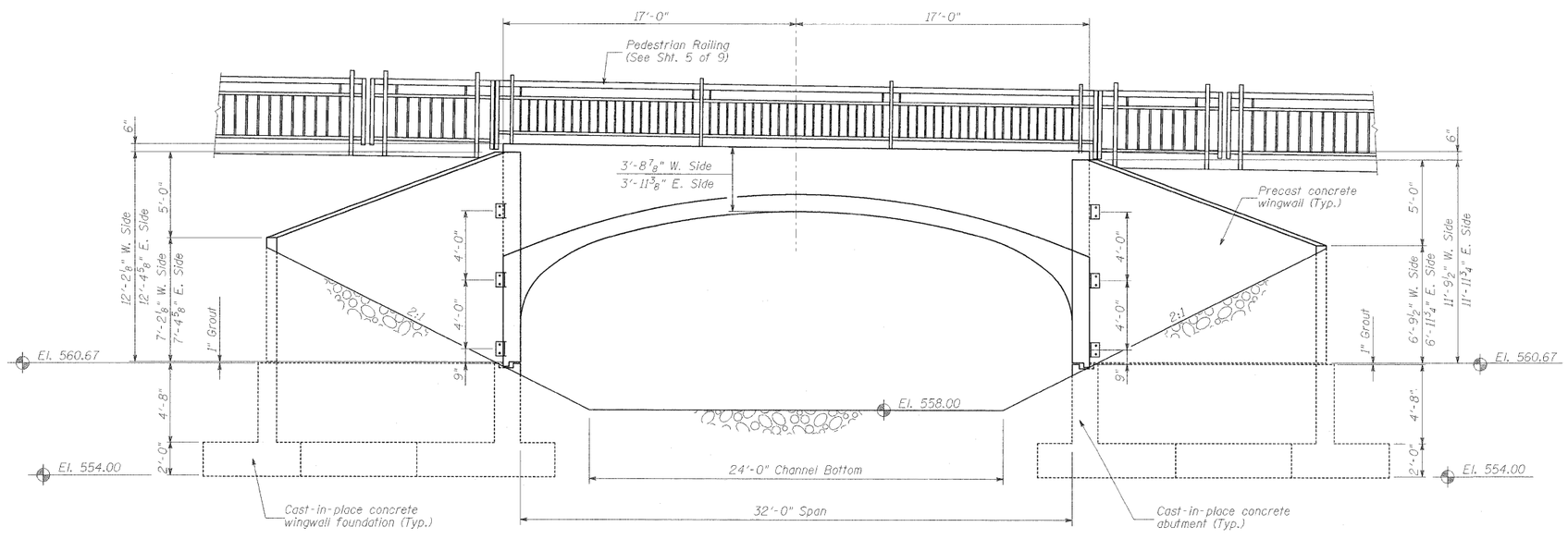

END ELEVATION

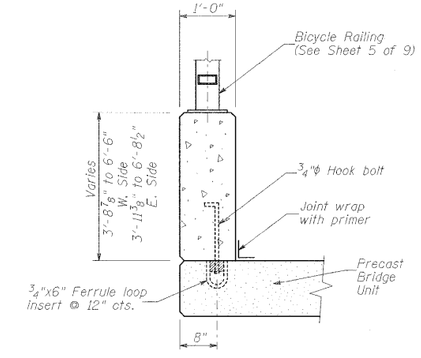

DETAIL 1

NOTES:

1. See Sheet 3 of 9 for location of Section B-B and Section C-C.
2. See Sheets 6 of 9 and 7 of 9 for abutment and wingwall foundation details.

FILE NAME = ...\Bridge Elevation and Section.dgn	USER NAME = Rob Heady	DESIGNED - WLB / WK	REVISED -
		DRAWN - GLD	REVISED -
	PLOT SCALE = 8.0000 ' / IN.	CHECKED - WLB	REVISED -
	PLOT DATE = 10/8/2008	DATE - 10/2008	REVISED -

MEADOWBROOK ROAD
CITY OF SPRINGFIELD
SPRINGFIELD, ILLINOIS

BRIDGE ELEVATION & SECTION
STATION 172+95.00 S.N. 084-6015
MEADOWBROOK RD. (TR 194) OVER SPRING CREEK TRIBUTARY

SCALE: N/A | SHEET NO. 18 OF 33 SHEETS | STA. N/A | TO STA. N/A