93487

COUNTY	ROUTE	SECTION	TOTAL SHEETS	SHEET NO.
ADAMS	FAS 596	08-00208-00-RS	12	6
STATION 290+00 TO STATION 320+00				

PROJECT NO. RS-596(104)

50 0 50 100
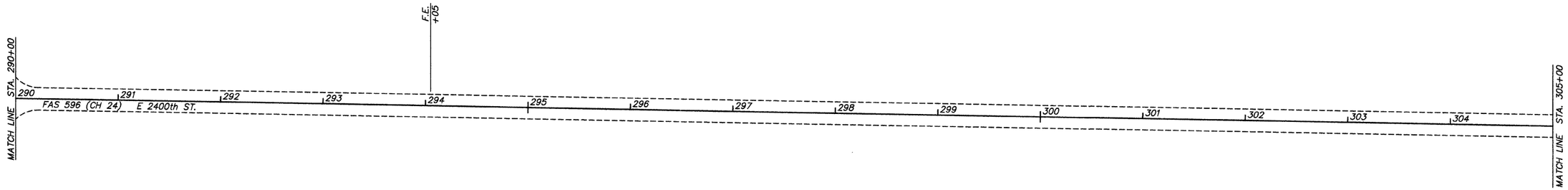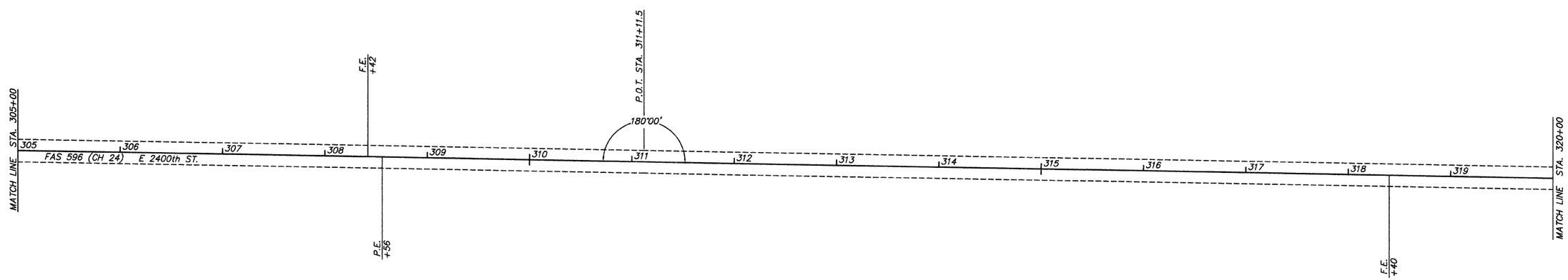
GRAPHIC SCALE IN FEET