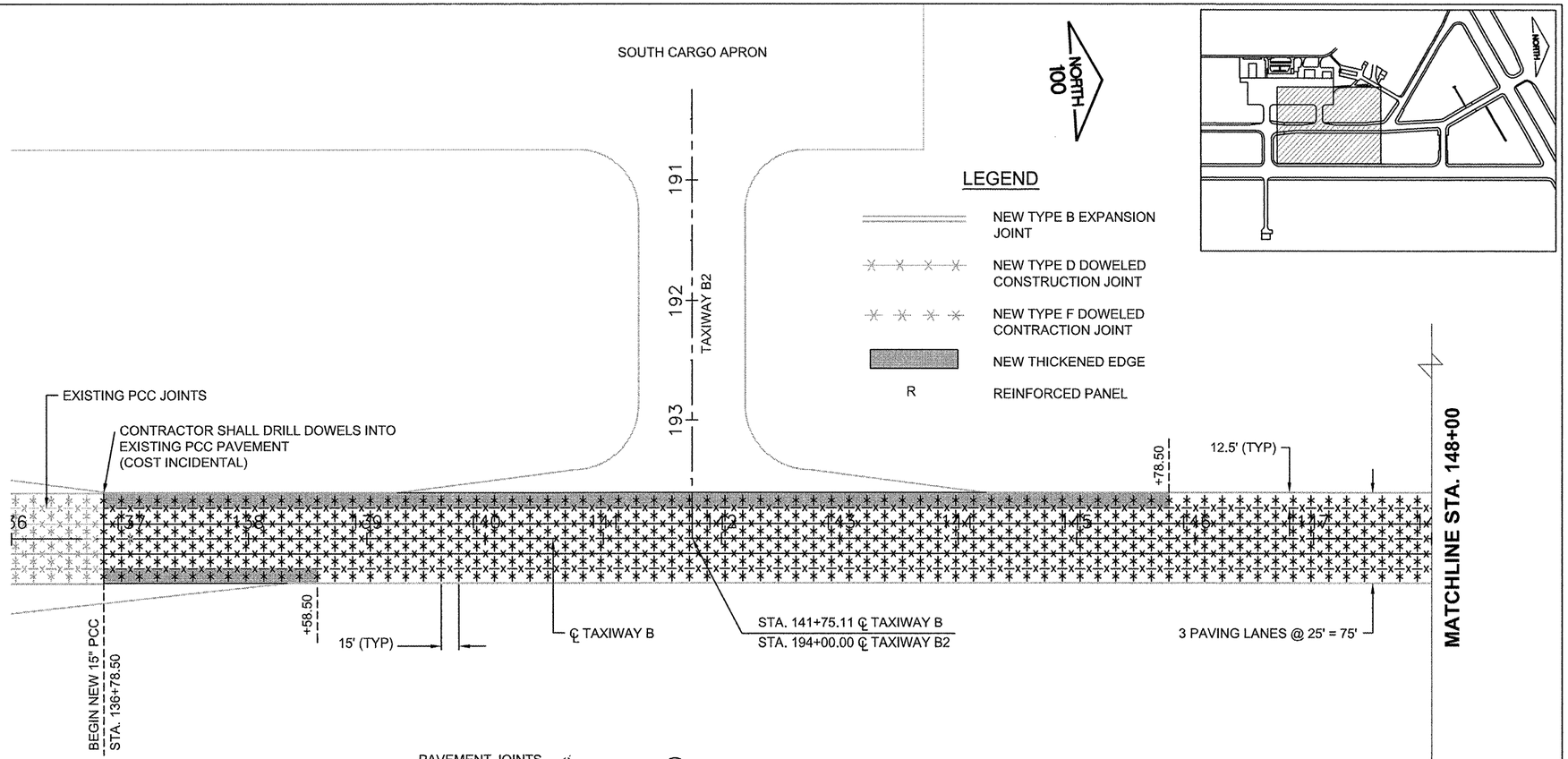

LEGEND

- NEW TYPE B EXPANSION JOINT
- NEW TYPE D DOWELED CONSTRUCTION JOINT
- NEW TYPE F DOWELED CONTRACTION JOINT
- NEW THICKENED EDGE
- R — REINFORCED PANEL

FILLET RADIUS	"X" (IN FEET)	"Y" (IN FEET)
20	4.30	6.24
25	4.88	7.00
30	5.40	7.68
50	7.11	9.95
75	8.79	12.21
85	9.38	13.00
100	10.21	14.11
125	11.44	15.78
150	12.56	17.29
175	13.58	18.68
200	14.53	19.98

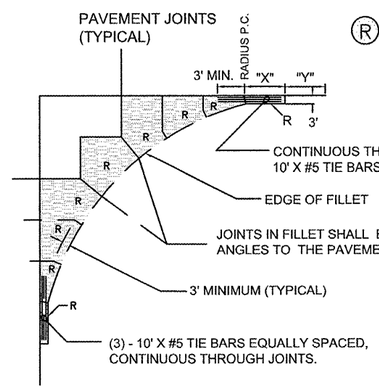

(R) DENOTES ODD SHAPED REINFORCED PANELS TO BE REINFORCED WITH DEFORMED WIRE FABRIC AS SHOWN ON JOINTING DETAILS SHEET. ALL NON RECTANGULAR SHAPED PANELS SHALL BE REINFORCED. (REINFORCEMENT NOT SHOWN)

FILLET DETAIL AND FILLET REINFORCING LAYOUT

N.T.S.

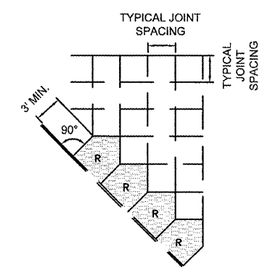

JOINTING AT SKEWED EDGE

N.T.S.

RUNWAY 1/19

JOINTING PLAN - 1 (JTP1)

RO017
5A

CMT
CRAWFORD, MURPHY & TILLY, INC.
CONSULTING ENGINEERS
Copyright CMT, Inc.

Chicago Rockford International Airport

FLYRFD.COM

ROCKFORD, ILLINOIS

GREATER ROCKFORD AIRPORT AUTHOIRTY

3-17-0088-XX
RFD-3909

REHAB. TWY B SOUTH PHASE 2

Revisions

Date	Description

0 — 1
THIS BAR IS EQUAL TO 1" AT FULL SCALE (17 X 11).

DESIGN BY:	CMT–ARR
DRAWN BY:	CMT–ARR
CHECKED BY:	CMT–ARR
APPROVED BY:	CMT–RFD
DATE:	5/8/2009
JOB No:	09258–04–00

JOINTING PLAN - 2 (JTP2)

22

XREF DWG: tbsprt.dwg
X01_Etopo.DWG
IMAGE FILES: 101-rd_logo.jpg
UPDATE BY: Jeremy Linke
LAYOUT: 22-JTP1
DATE: Monday, May 11, 2009 3:59:07 PM
FILE: K:\Rockford\09258D4 Rehab Twy B South Ph2\Draw\Sheets\22-23-JTP1-2.dwg