F.A.I. RTE.	SECTION	COUNTY	TOTAL SHEETS	SHEET NO.
59	*	WILL	608	402
STA.		TO STA.		
FED. ROAD DIST. NO. 1	ILLINOIS	FED. AID PROJECT		

* (26, 26HB-1 & 114) R-2
CONTRACT NO. 60363

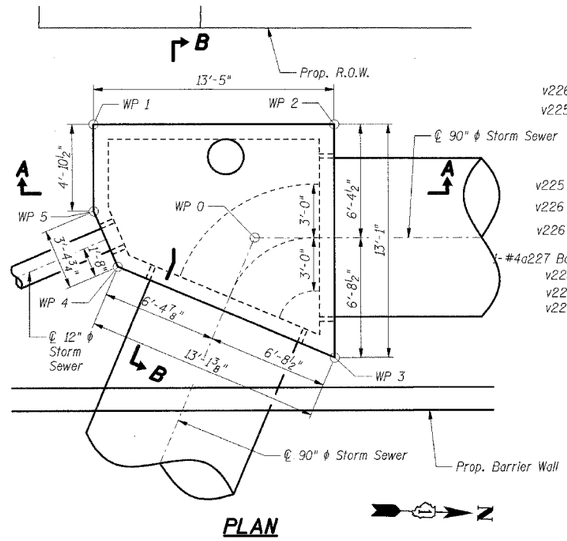

PLAN

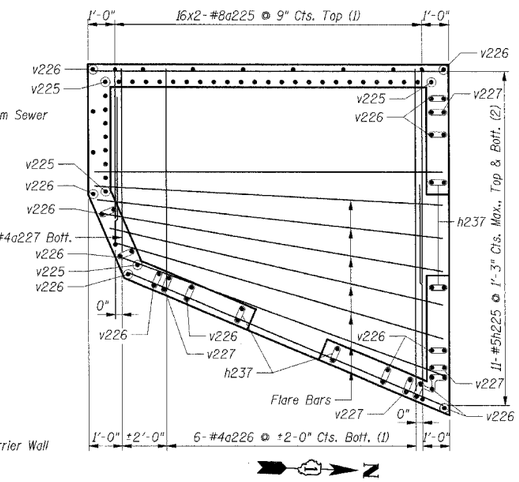

BOTTOM SLAB PLAN

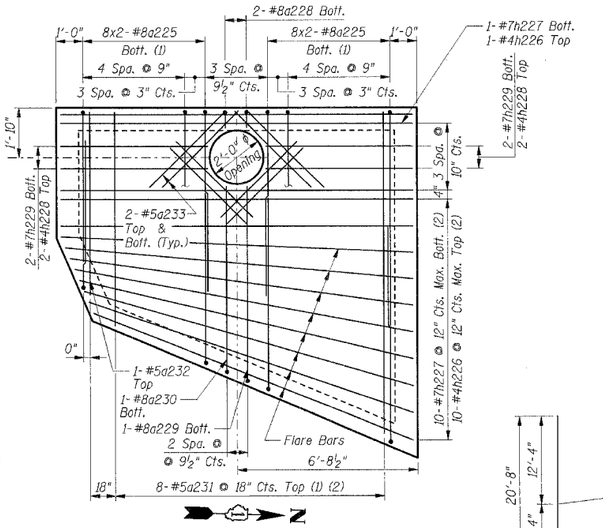

TOP SLAB PLAN

WORK POINTS

Work Point	Station	Offset
WP 0	7521+15.02	42.64 Lt.
WP 1	7521+06.10	49.03 Lt.
WP 2	7521+19.46	49.01 Lt.
WP 3	7521+19.44	35.93 Lt.
WP 4	7521+07.41	41.04 Lt.
WP 5	7521+06.09	44.16 Lt.

BAR LIST

Bar	No.	Size	Length	Shape
a225	32	#8	15'-5"	
a226	3	#4	20'-5"	
a227	1	#4	6'-7"	
a228	2	#8	1'-5"	
a229	1	#8	8'-2"	
a230	1	#8	7'-10"	
a231	4	#5	20'-5"	
a232	1	#5	6'-7"	
a233	16	#5	4'-0"	
h225	22	#5	13'-2"	
h226	13	#4	13'-2"	
h227	13	#7	13'-2"	
h228	4	#4	4'-8"	
h229	4	#7	4'-8"	
h230	20	#5	11'-10"	
h231	20	#5	6'-4"	
h232	20	#5	3'-4"	
h233	20	#5	10'-2"	
h234	20	#5	13'-3"	
h235	2	#4	8'-9"	
h236	4	#6	23'-4"	
h237	4	#6	19'-4"	
v225	34	#4	2'-6"	
v226	34	#5	2'-10"	
v227	8	#6	3'-2"	
v228	34	#4	9'-7"	
v229	34	#5	9'-7"	
v230	40	#4	3'-10"	
v231	4	#4	4'-10"	
v232	4	#4	3'-10"	

BAR CUTTING DIAGRAMS

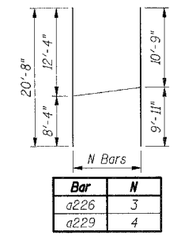

Bar	N
a226	3
a229	4

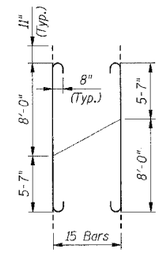

Bar a225

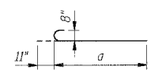

Bars a228, a229 & a230

Bar	a
a228	6"
a229	7'-3"
a230	6'-11"

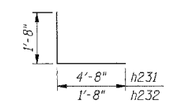

Bars h231 & h232

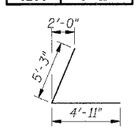

Bar h233

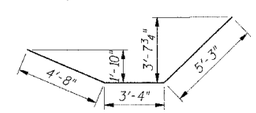

Bar h234

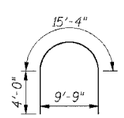

Bar h236

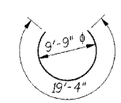

Bar h237

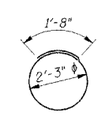

Bar h235

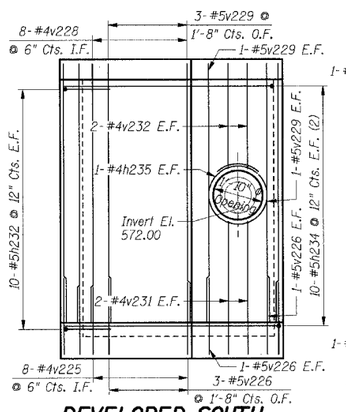

DEVELOPED SOUTH WALL ELEVATION

(Looking North)

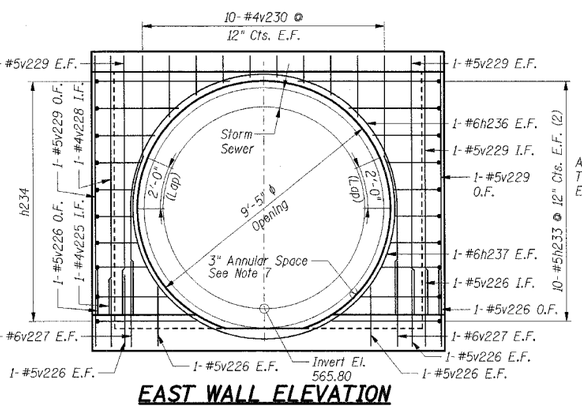

EAST WALL ELEVATION

(Looking West)

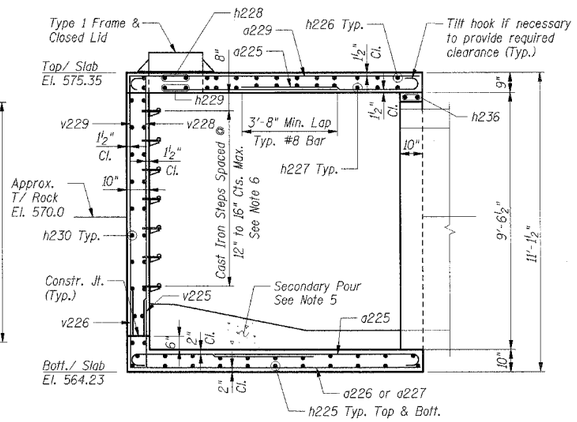

SECTION B-B

TOTAL BILL OF MATERIAL

Item	Unit	Total
Strucure Excavation	Cu Yd	44
Rock Excavation for Structures	Cu Yd	29.1
Concrete Structures	Cu Yd	16.6
Reinforcement Bars	lbs	4,470
Frames, Type 1	Each	1
Lids, Type 1, Closed Lid	Each	1

Reinforcing Notes:
(1) Cut bars according to bar cutting diagram.
(2) Cut bars to fit in field.

Notes:
1. Work this Sht. with Sht. #GPGW-0.
2. Bars indicated thus: 4x2-#5 etc. indicate 4 lines of bars with 2 lengths per line.
3. All edges shall have standard ¾" chamfers except as noted.
4. E.F. indicates Each Face.
   I.F. indicates Inside Face.
   O.F. indicates Outside Face.
5. See Sht. DS-7 for Secondary Pour Detail.
6. Cost of Cast Iron Steps included with Concrete Structures.
7. See Sht. DS-7 for Annular Grouting Detail.

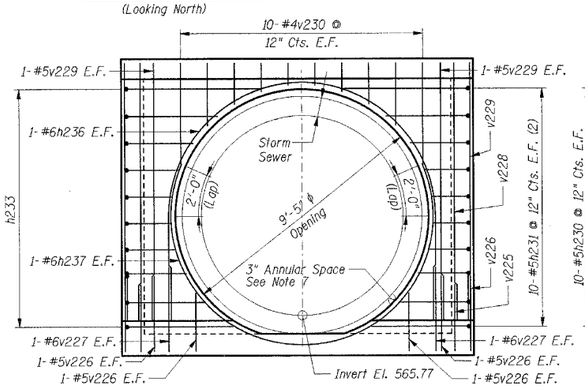

NORTH WALL ELEVATION

(Looking South)

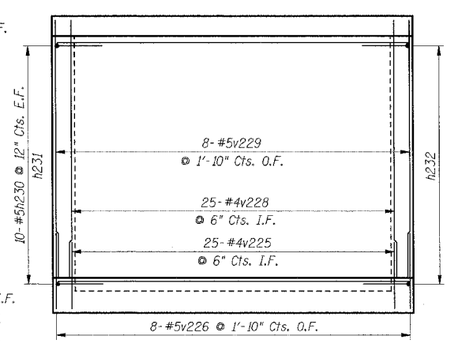

WEST WALL ELEVATION

(Looking East)

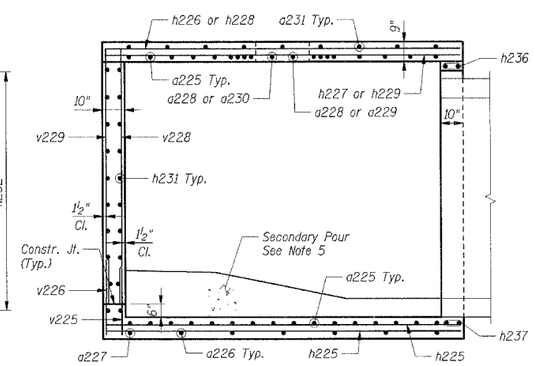

SECTION A-A

SHT. DS-8 OF DS-11

REVISIONS	
NAME	DATE

ILLINOIS DEPARTMENT OF TRANSPORTATION
FAI 55 AT FAP 338 ILLINOIS ROUTE 59
SECTION: (26, 26HB-1 & 114) R-2

DRAINAGE STRUCTURE 30
PLAN AND DETAILS

DRAWN BY: TMH
DATE: 03/14/08 CHECKED BY:

TENG
TENG & ASSOCIATES, INC.
ENGINEERS/ARCHITECTS/PLANNERS
205 W. MICHIGAN AVE. CHICAGO, IL 60601
TELEPHONE 312-853-0300

..\GPGW0P10.DGN, ..\ALTOURH6.DGN, ..\TTB00RH6.DGN, ..\RETAORH6.DGN, ..\GRD00SK6.DGN, ..\GPEO0RP-..DGN, ..\GPEO0RP..DGN, ..\GRD00SK5.DGN, ..\RDWO0ROH.DGN, ..\RDWO0ROO.DGN, ..\RDWO0ROD.DGN, ..\SUR00R9V.DGN
3-13-2008, 12:12:27 T:\DOCUMENT\32379\STRUCTURE\DRAINAGE\GRD00SK6.DGN BOMDHELD
pen: tables color *.tbl: K:\STANDARD\TENG\DATA\COLORTABLE.TBL