STATE OF ILLINOIS
DEPARTMENT OF TRANSPORTATION

ROUTE NO.	SECTION	COUNTY	TOTAL SHEETS	SHEET NO.
F.A.P. 351	2008-001VB	COOK	579	456
FED. ROAD DIST. NO. 7	ILLINOIS	FED. AID PROJECT-		

SHEET NO. 46
54 SHEETS

CONTRACT NO. 60E10

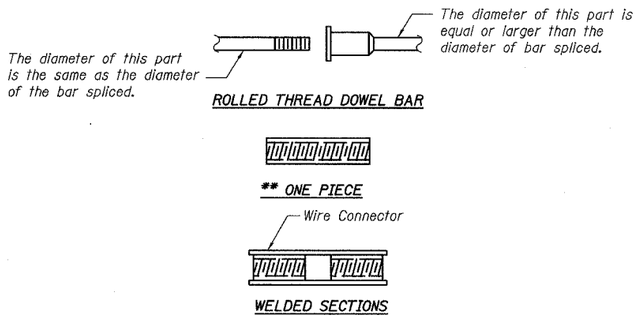

BAR SPLICER ASSEMBLY ALTERNATIVES

** Heavy Hex Nuts conforming to ASTM A 563, Grade C, D or DH may be used.

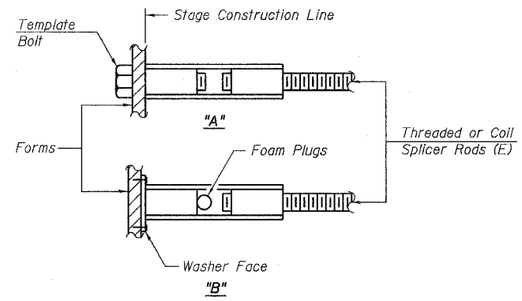

INSTALLATION AND SETTING METHODS

"A" : Set bar splicer assembly by means of a template bolt.
"B" : Set bar splicer assembly by nailing to wood forms or cementing to steel forms.
(E) : Indicates epoxy coating.

NOTES

Bar splicer assemblies shall be of an approved type and shall develop in tension at least 125 percent of the yield strength of the lapped reinforcement bars.

Splicer rods shall be of minimum 60 ksi yield strength, threaded or coiled full length.

All reinforcement bars shall be lapped and tied to the splicer rods or dowel bars.

Bar splicer assemblies shall be epoxy coated according to the requirements for reinforcement bars.

Other systems of similar design may be submitted to the Engineer for approval. Approval shall be based on certified test results from an approved testing laboratory that the proposed bar splicer assembly satisfies the following requirements:

1. Minimum Capacity (Tension in kips) = $1.25 \times fy \times A_t$
2. Minimum *Pull-out Strength (Tension in kips) = $0.66 \times fy \times A_t$

Where fy = Yield strength of lapped reinforcement bars in ksi.
A_t = Tensile stress area of lapped reinforcement bars.
* = 28 day concrete

BAR SPLICER ASSEMBLIES			
Bar Size to be Spliced	Splicer Rod or Dowel Bar Length	Strength Requirements	
		Min. Capacity kips - tension	Min. Pull-Out Strength kips - tension
#4	1'-8"	14.7	7.9
#5	2'-0"	23.0	12.3
#6	2'-7"	33.1	17.4
#7	3'-5"	45.1	23.8
#8	4'-6"	58.9	31.3
#9	5'-9"	75.0	39.6
#10	7'-3"	95.0	50.3
#11	9'-0"	117.4	61.8

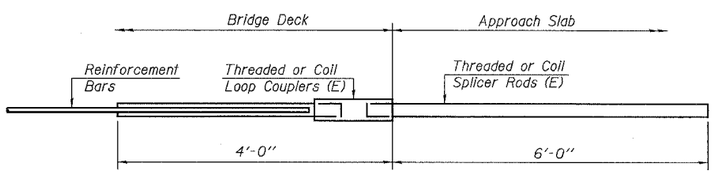

FOR INTEGRAL OR SEMI-INTEGRAL ABUTMENTS

Bar Splicer for #5 bar
Min. Capacity = 23.0 kips - tension
Min. Pull-out Strength = 9.2 kips - tension
No. Required = 240 SN 016-2820
No. Required = 56 SN 016-2821

SN 016-2820

Bar Size	No. Assemblies Required	Location
#5	240	Deck

SN 016-2821

Bar Size	No. Assemblies Required	Location
#5	56	Deck

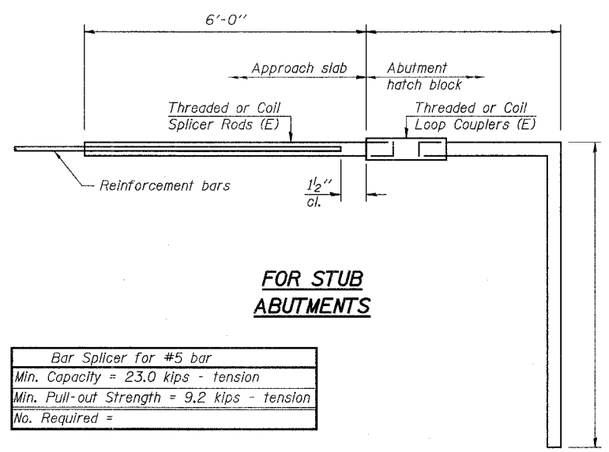

FOR STUB ABUTMENTS

Bar Splicer for #5 bar
Min. Capacity = 23.0 kips - tension
Min. Pull-out Strength = 9.2 kips - tension
No. Required =

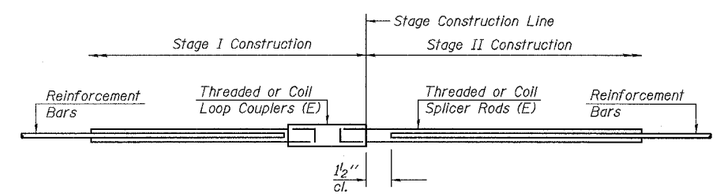

SN 016-2820

Bar Size	No. Assemblies Required	Location
#10	30	Pier
#5	16	Pier
#7	18	North abutment footing
#5	64	North abutment
#7	18	South abutment footing
#5	64	South abutment

DESIGNED	EV
CHECKED	NPP
DRAWN	EV
CHECKED	NPP

BSD-1 11-1-06

REVISIONS
NAME DATE

URS 100 South Wacker Drive, Suite 500 Chicago, IL 60606 (312) 939-1000

ILLINOIS DEPARTMENT OF TRANSPORTATION
US RTE 6 FROM I-294 TO IL RTE 1

BAR SPLICER ASSEMBLY DETAILS

STRUCTURES FOR CN INTERMODAL YARD VEHICLES OVER U.S. RTE. 6 (159TH STREET)

STATION 95+02.14 STRUCTURE NOS. 016-2820 & 016-2821

SCALE: N.T.S. DATE: 2/21/2008

q:\17049.069\structures\2820_w_hwy\dwg\prefinal plans\46-splicer.dgn 3/13/2008 2:08:06 PM