F.A.P. RTE.	SECTION	COUNTY	TOTAL SHEETS	SHEET NO.
338	114R-1	WILL	355	12
STA.		TO STA.		
FED. ROAD DIST. NO. 1	ILLINOIS	FED. AID PROJECT		

EXISTING LEGEND

- [A] PORTLAND CEMENT CONCRETE PAVEMENT 9"
- [B] HOT-MIX ASPHALT BINDER AND SURFACE COURSES 5"
- [C] HOT-MIX ASPHALT BINDER AND SURFACE COURSES (VARIES 2" - 5")
- [D] HOT-MIX ASPHALT BINDER AND SURFACE COURSES 4"
- [E] HOT-MIX ASPHALT SURFACE AND BINDER COURSES (VARIES)
- [F] BITUMINOUS OR PORTLAND CEMENT CONCRETE BASE COURSE (VARIES 8" - 12")
- [G] BITUMINOUS BASE COURSE 8"
- [H] SUB-BASE GRANULAR MATERIAL (VARIES 0" - 4")
- [I] BITUMINOUS SHOULDER (VARIES 6½" - 8")
- [J] AGGREGATE SHOULDER (VARIES 6" - 8")
- [K] EXISTING TOPSOIL
- [L] PORTLAND CEMENT CONCRETE SIDEWALK (AT LOCATIONS NOTED IN PLANS)
- [M] COMBINATION CONCRETE CURB & GUTTER
- (N) REMOVAL AND DISPOSAL OF UNSUITABLE MATERIAL
- (O) EARTH EXCAVATION
- (P) PAVEMENT REMOVAL
- (Q) PAVED SHOULDER REMOVAL
- (R) SIDEWALK REMOVAL
- (S) COMBINATION CONCRETE CURB & GUTTER REMOVAL
- (T) RETAINING WALL (TO REMAIN)

PROPOSED LEGEND

- (1) PORTLAND CEMENT CONCRETE PAVEMENT 9¾" (JOINTED)
- (2) AGGREGATE SUBGRADE 12"
- (3) COMBINATION CONCRETE CURB & GUTTER, TYPE B-6.12
- (4) COMBINATION CONCRETE CURB & GUTTER, TYPE B-6.24
- (5) CONCRETE MEDIAN, TYPE SB-6 (SPECIAL)/CONCRETE MEDIAN, TYPE SB-6.24 (SEE DETAIL SHEET NO.189)
- (6) NO. 6 x 24" TIE BARS (EPOXY COATED) GROUTED IN PLACE AT 24" O.C. INCLUDED IN COST OF COMBINATION CONCRETE CURB & GUTTER, STANDARD 606001.
- (7) LONGITUDINAL CONSTRUCTION JOINT GROUTED-IN-PLACE TIE BARS (EPOXY COATED) NO. 8 x 24" LONG DEFORMED TIE BARS AT 24" O.C. (STANDARD 420001) (INCLUDED IN THE COST OF CONCRETE PAVEMENT)
- (8) LONGITUDINAL SAWED JOINT - NO. 6 X 30" LONG DEFORMED TIE BARS (EPOXY COATED) AT 30" O.C. (STANDARD 420001) (INCLUDED IN THE COST OF CONCRETE PAVEMENT)
- (9) SODDING, SALT TOLERANT OR SEEDING (AS NOTED ON LANDSCAPING PLANS)
- (10) TOPSOIL FURNISH AND PLACE, 4"
- (11) TOPSOIL FURNISH AND PLACE, 8"
- (12) TOPSOIL FURNISH AND PLACE, 12"
- (13) PORTLAND CEMENT CONCRETE SIDEWALK, 5"
- (14) PIPE UNDERDRAINS, FABRIC LINED TRENCH 4"

(BOXED ITEMS ARE INCLUDED IN THE COST OF ANOTHER PAY ITEM)

NOTES

1. PIPE UNDERDRAINS, FABRIC LINED TRENCH 4" (14) HAVE BEEN PROVIDED TO DRAIN THE AGGREGATE SUBGRADE 12". SEE SHEET 17 FOR THE LOCATIONS OF PIPE UNDERDRAINS, FABRIC LINED TRENCH 4" SEE SHEET 13 FOR THE DETAILS OF THE PLACEMENT OF PIPE UNDERDRAINS. THE UNDERDRAINS SHALL BE CONNECTED TO THE NEAREST DRAINAGE STRUCTURE. THE UNDERDRAINS SHALL BE MOVED TO THE LOW POINTS OF UNDERCUTS REPLACED WITH PGES AS DIRECTED BY THE ENGINEER.

2. POROUS GRANULAR EMBANKMENT, SUBGRADE (PGES) HAS BEEN INCLUDED IN THE CONTRACT AT THE DEPTHS AND LOCATIONS DEPICTED ON SHEET 17 . THE ACTUAL NEED FOR THE REMOVAL AND REPLACEMENT OF THE EXISTING SUBGRADE WITH PGES WILL BE DETERMINED AT THE TIME OF CONSTRUCTION IN THE FIELD BY THE ENGINEER (BY USE OF A CONE PENETROMETER IN CONJUCTION WITH THE IDOT SUBGRADE STABILITY MANUAL). IF UNSTABLE SOILS ARE ENCOUNTERED, THE SOILS SHALL BE REMOVED AND REPLACED WITH PGES. IF UNSTABLE SOILS ARE NOT ENCOUNTERED, THEN THE QUANTITY SHALL BE DEDUCTED AND NO ADDITIONAL COMPENSATION WILL BE DUE TO THE CONTRACTOR.

[1] AT THE CONTRACTORS OPTION, A LONGITUDINAL CONSTRUCTION JOINT (7) MAY BE USED

[2] (5) CONCRETE MEDIAN, TYPE SB-6.24/CONCRETE MEDIAN, TYPE SB-6 (SPECIAL)/CORRUGATED MEDIAN

STA 3067+88.4 TO STA 3073+74.4
STA 3074+56.9 TO STA 3081+48.5
STA 3083+03.4 TO STA 3088+60.4
STA 3089+59.8 TO STA 3092+85.7
STA 3095+40.7 TO STA 3098+66.6
STA 3112+73.6 TO STA 3113+81.7
STA 3114+25.5 TO STA 3115+37.5
STA 3117+84.1 TO STA 3121+10.1
STA 3131+32.6 TO STA 3134+58.6
STA 3135+74.0 TO STA 3138+99.9
STA 3143+07.8 TO STA 3146+33.7
STA 3168+63.4 TO STA 3171+87.8
STA 3172+93.2 TO STA 3176+19.2
STA 3184+24.2 TO STA 3187+50.2
STA 3188+79.6 TO STA 3192+05.5

[3] (4)(9)(12) WHERE MEDIAN WIDTH EXCEEDS 11.17'

(5) WHERE MEDIAN WIDTH IS LESS THAN 11.17' (SEE SINGLE LEFT TURN BAY DETAIL).

[4] SEE PLANS FOR LOCATIONS OF EXISTING PCC SIDEWALK TO REMAIN.

[5] SEE SHEET 13 FOR ALTERNATE SIDEWALK/SIDE SLOPE SECTIONS AND THE LOCATIONS OF EACH

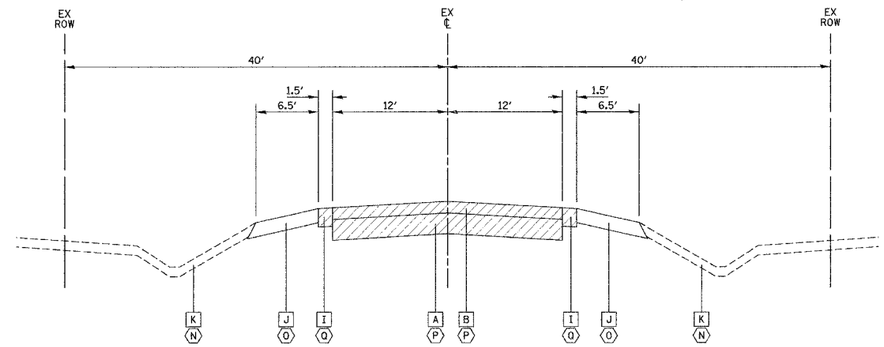

EXISTING TYPICAL SECTION

ILLINOIS ROUTE 59

STA 3042+01 TO STA 3056+70
STA 3142+40 TO STA 3150+70
STA 3160+72 TO STA 3164+95

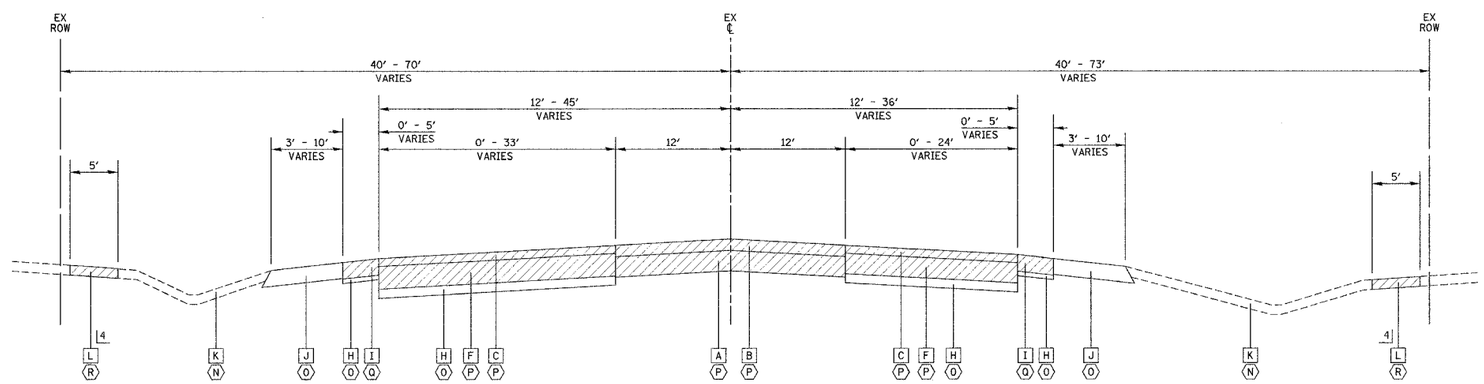

EXISTING TYPICAL SECTION

ILLINOIS ROUTE 59

STA 3056+70 TO STA 3142+40
STA 3150+70 TO STA 3160+72
STA 3164+95 TO STA 3193+25

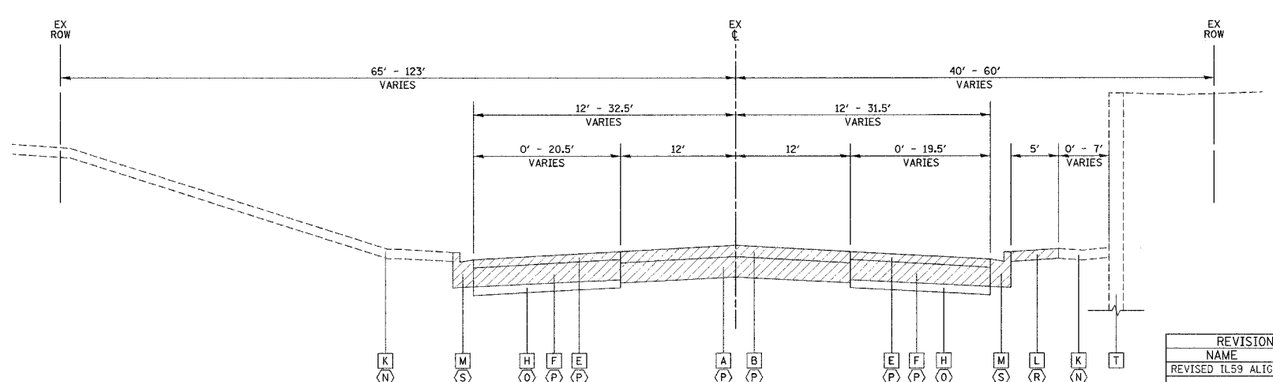

EXISTING TYPICAL SECTION

ILLINOIS ROUTE 59

STA 3032+25.77 TO STA 3042+01

REVISIONS	
NAME	DATE
REVISED IL59 ALIGN.	12/22/06

ILLINOIS DEPARTMENT OF TRANSPORTATION

TYPICAL SECTIONS

ILLINOIS ROUTE 59

SCALE: NONE

DATE 3/18/08
DRAWN BY MJG
CHECKED BY VJD

PLAN
SURVEYED
PLOTTED
ALIGNMENT CHECKED
FIELD BOOK
NO.
CADD FILE NAME
DATE BY

PROFILE
NOTES PLOTTED
GRADES CHECKED
NOTE BOOK
NO.
STRUCTURE NO(S)
DATE BY