F.A.P. RTE.	SECTION	COUNTY	TOTAL SHEETS	SHEET NO.
338	114R-1	WILL	355	212
STA. 3098+00		TO STA. 3127+00		
FED. ROAD DIST. NO. 1	ILLINOIS	FED. AID PROJECT		

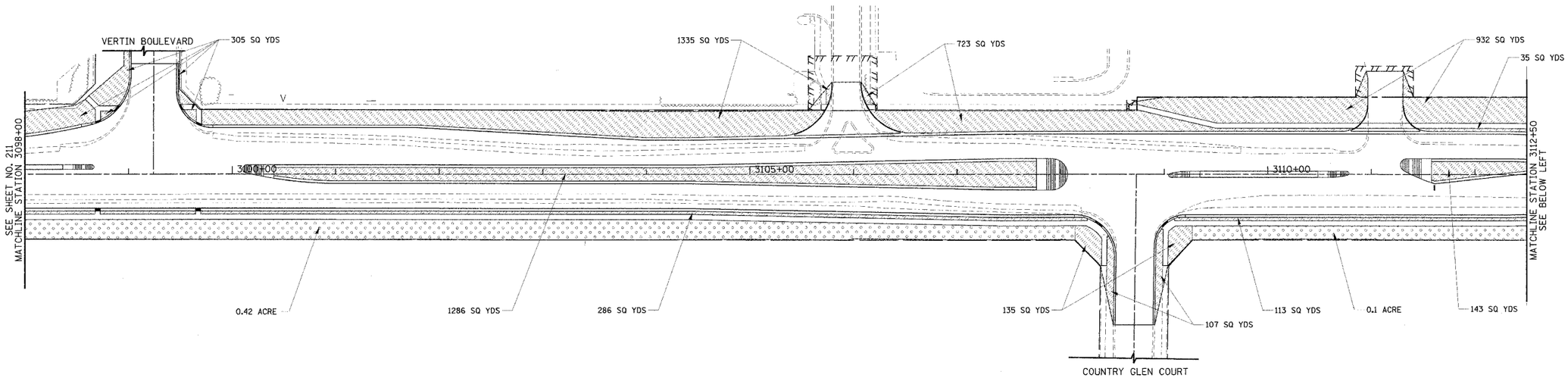

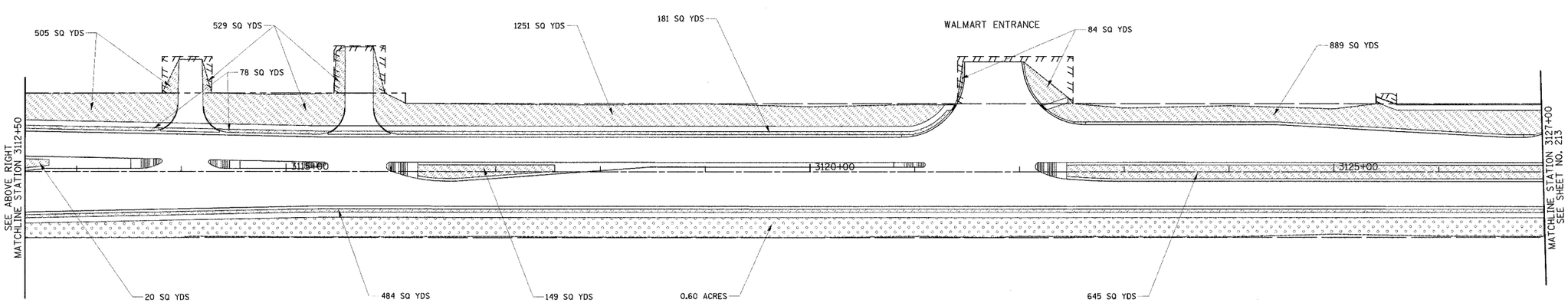

SEE SHEET 209
FOR LEGEND

REVISIONS	
NAME	DATE
REVISED IL59 ALIGN.	12/22/06

ILLINOIS DEPARTMENT OF TRANSPORTATION

LANDSCAPING PLAN

ILLINOIS ROUTE 59

STATION 3098+00 TO STATION 3127+00

50 0 50
SCALE IN FEET

DATE 3/18/08
DRAWN BY MJG
CHECKED BY VJD