STATE OF ILLINOIS
DEPARTMENT OF TRANSPORTATION

ROUTE NO.	SECTION	COUNTY	TOTAL SHEETS	SHEET NO.
F.A.P. 338	114R-1	WILL	355	279
FED. ROAD DIST. NO. 7		ILLINOIS	FED. AID PROJECT-	

SHEET NO. S3-5
7 SHEETS

Contract # 62416

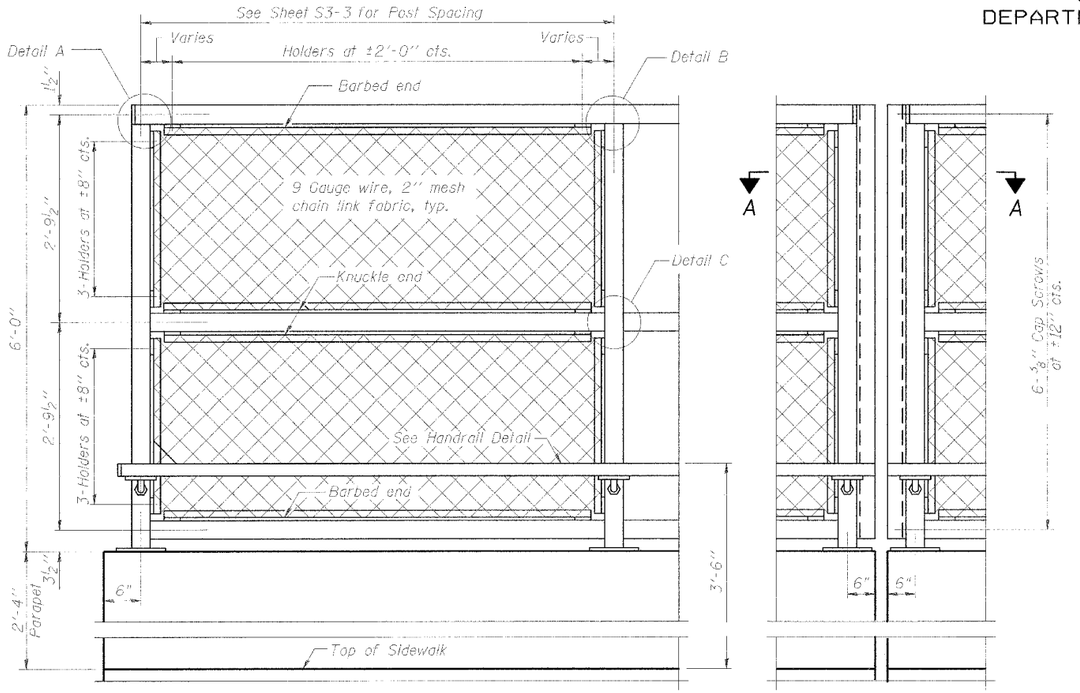

ELEVATION
(Inside Face)

ELEVATION
(At Expansion Joint)

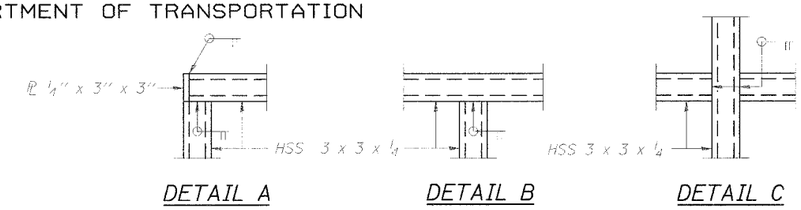

DETAIL A

DETAIL B

DETAIL C

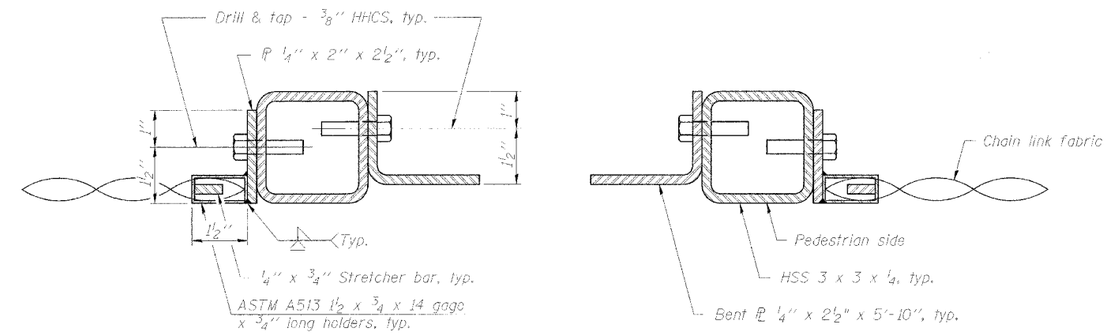

SECTION A-A

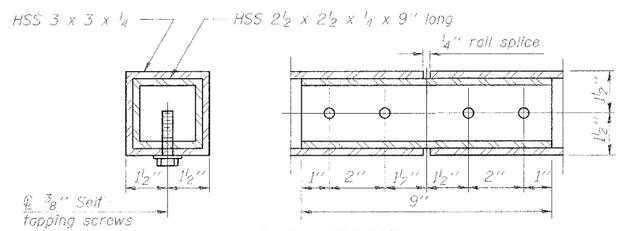

RAIL SPLICE

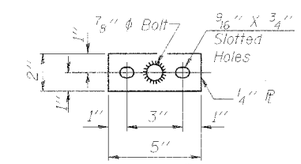

BASE PL
(Handrail)

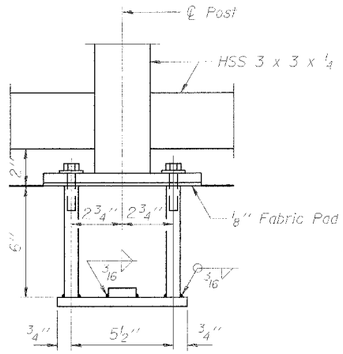

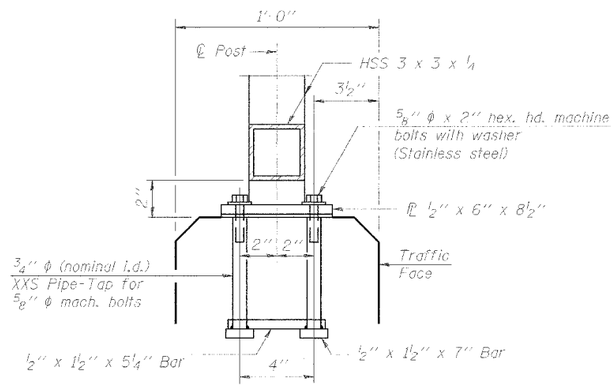

ANCHOR BOLT DETAILS

In lieu of the cast-in-place anchor device shown, the Contractor has the option of drilling and setting ⅝" ϕ anchor rods according to Article 509.06 of the Standard Specifications. Embedment shall be according to the manufacturer's specifications.

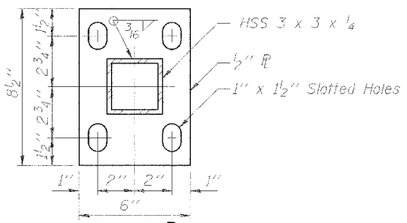

BASE PL

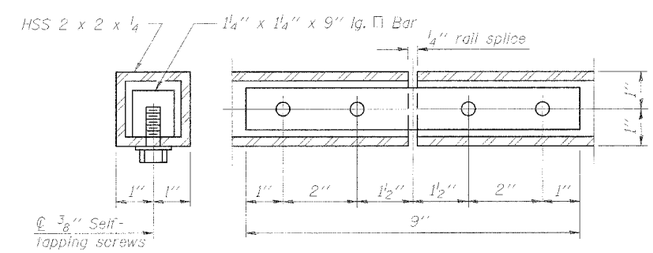

HANDRAIL SPLICE

All posts, railing, splices, anchor devices, and bent plates shall be powder coated and the color shall be black.

All galvanized exterior surfaces shall be coated with a urethane or triglycidyl isocyanurate (TGIC) polyester powder to a dry film thickness of 2.0 mils. Prior to application, the surface shall be mechanically etched by brush blasting (Ref. SSPC-SP7) and the zinc coated substrate preheated to 450 degrees F for a minimum one (1) hour. The coating shall be electrostatically applied and cured by elevating the zinc-coated substrate temperature to a minimum of 400 degrees F.

Prior to shipping, the poles and posts shall be wrapped in ultraviolet-inhibiting plastic foam or rubberized foam.

The chain link fabric shall conform to the requirements of Article 1006.27(a)(1) of the Standard Specifications, and shall be vinyl coated to match the black powder coating on all posts, railing, splices, anchor devices and bent plates.

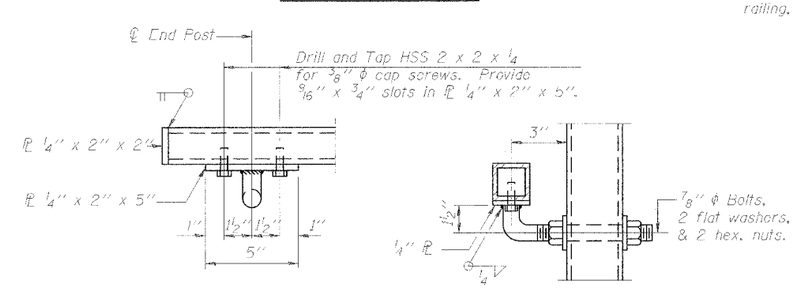

HANDRAIL DETAIL

BILL OF MATERIAL

Item	Unit	Quantity
Pedestrian Railing	Foot	13

PEDESTRIAN RAILING

IL ROUTE 59 OVER DRAINAGE DITCH
F.A.P. ROUTE 338 SECTION 114R-1
WILL COUNTY
STATION 3051+32.33

TranSystems
3051 PERIMETER DRIVE, SUITE 1025
SCHAUMBURG, IL 60173-5058
TEL (847) 605-9600
FAX (847) 605-9630

3/28/08

DESIGNED	MDS
CHECKED	SLC
DRAWN	MDS
CHECKED	SLC

R-28 11-1-06 (10'-0" Maximum Post Spacing)

$USER$ - gpi\chf02\00002\structure\sheets\ditchrailing.sht
$DATE$