CONTRACT NO. 64C35

F.A.P. RTE.	SECTION	COUNTY	TOTAL SHEETS	SHEET NO.
17	15T-2	CARROLL	71	11
STA.		TO STA.		
FED. ROAD DIST. NO.	ILLINOIS	FED. AID PROJECT		

STAGING CULVERT TYPICALS

6' Pipe Culvert @ 0° Skew

STA. 1359 + 16

STAGE 1

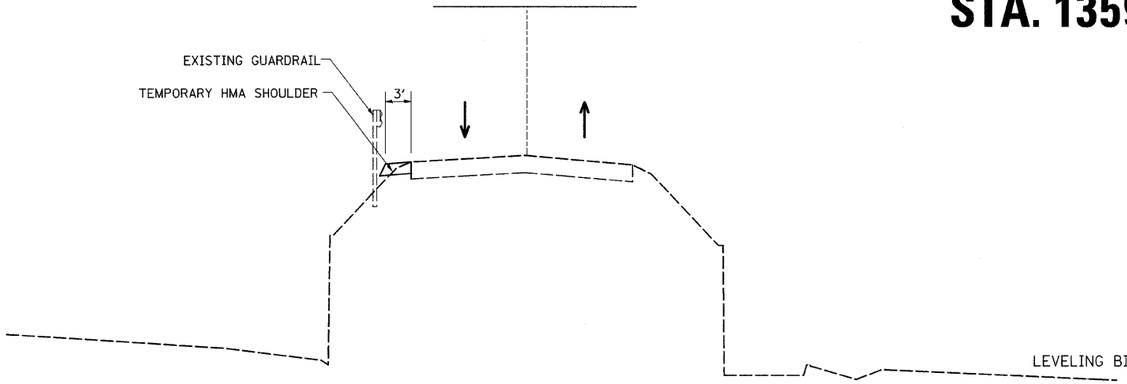

TEMPORARY SHEET PILING

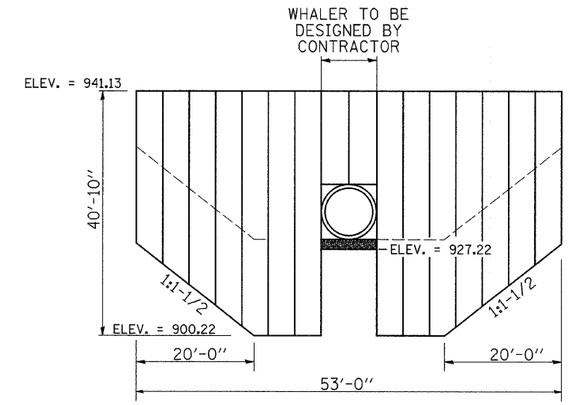

STAGE 3

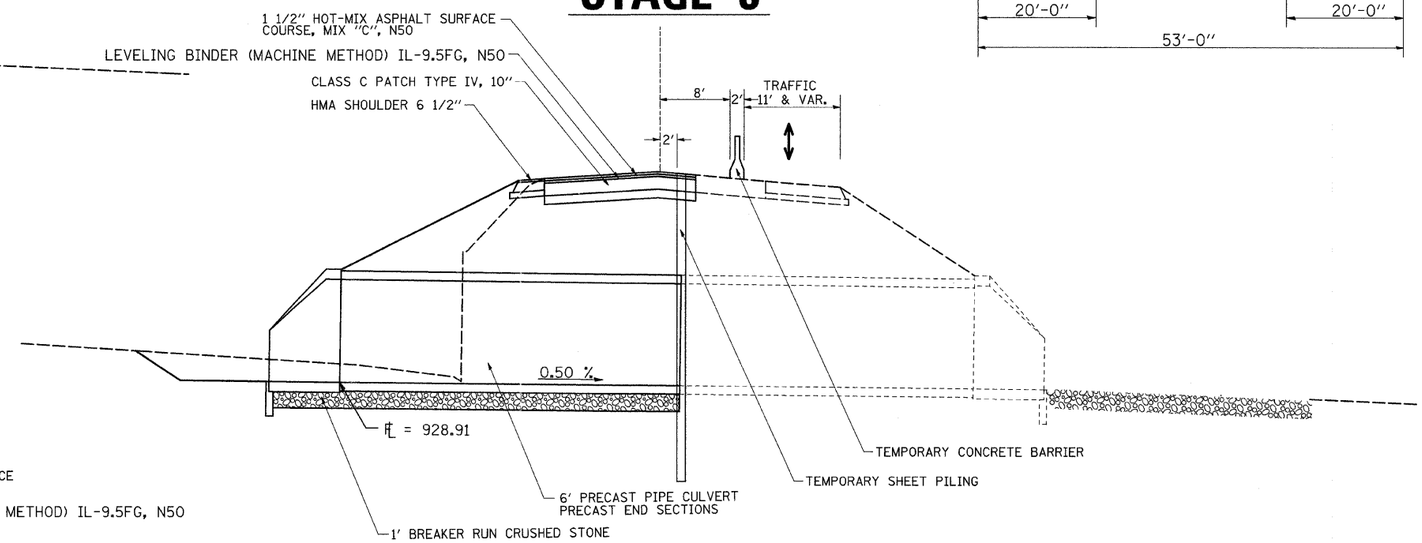

STAGE 2

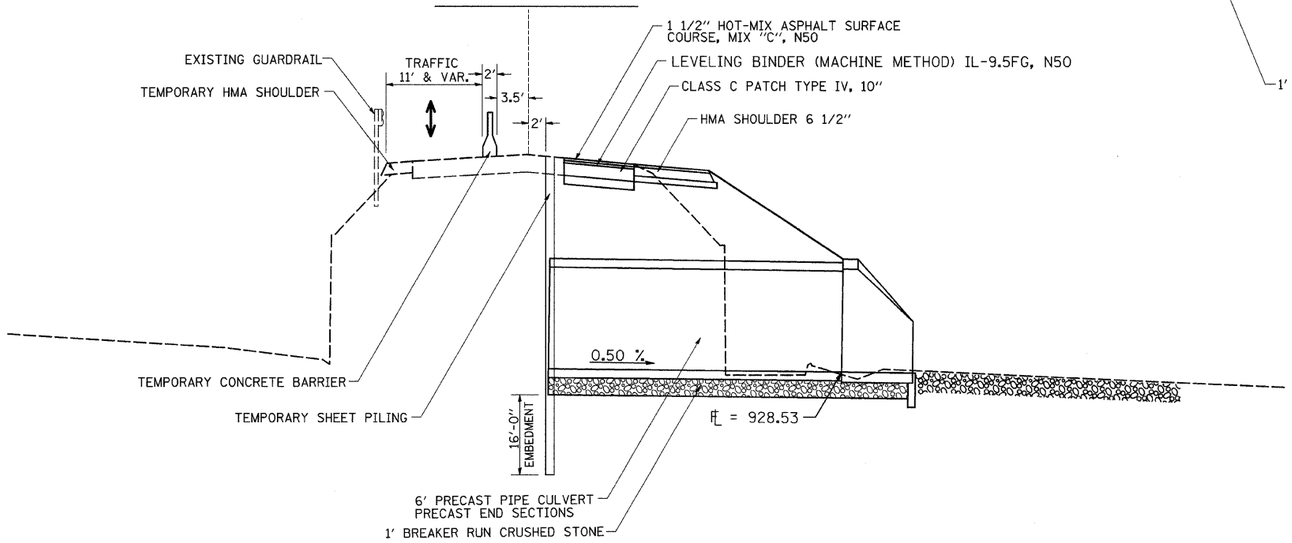

GENERAL NOTES:

1) TRAFFIC CONTROL TO BE SET UP AND PAID FOR ACCORDING TO TRAFFIC CONTROL AND PROTECTION STANDARD 701321.
2) THE CONTRACTOR IS RESPONSIBLE FOR MAINTAINING FLOW IN A MANNER ACCEPTABLE TO THE ENGINEER.
4) BARRIER WALL AND IMPACT ATTENUATORS SHALL BE SET UP AS SHOWN IN STANDARD 701321

REVISIONS	
NAME	DATE

ILLINOIS DEPARTMENT OF TRANSPORTATION

SCALE: VERT. HORIZ.

DRAWN BY

DATE

CHECKED BY

PLOT DATE = Mon Jan 28 07:51:02 2008
FILE NAME = C:\Projects\p207806\d07806typ.dgn
PLOT SCALE = 50.0000 ' / IN.
USER NAME = hensonke

STAGING TYPICAL SECTIONS