STATE OF ILLINOIS
DEPARTMENT OF TRANSPORTATION

ROUTE NO.	SECTION	COUNTY	TOTAL SHEETS	SHEET NO.
FA 68	*	LIVINGSTON	16	16
FED. ROAD DIST. NO. 7		ILLINOIS	FED. AID PROJECT-	

* (102-B-1)

SHEET NO. 6
6 SHEETS

Contract Number: 66810

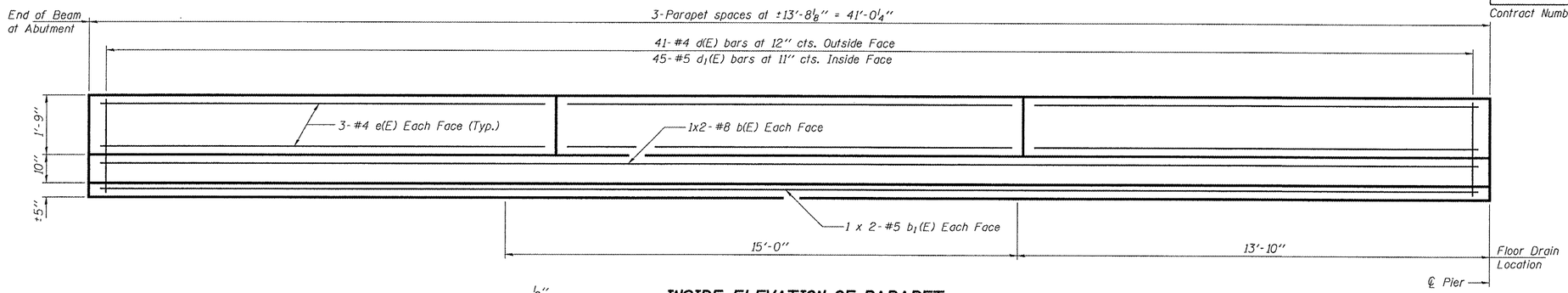

INSIDE ELEVATION OF PARAPET

(Span 1 shown, Span 3 similar)

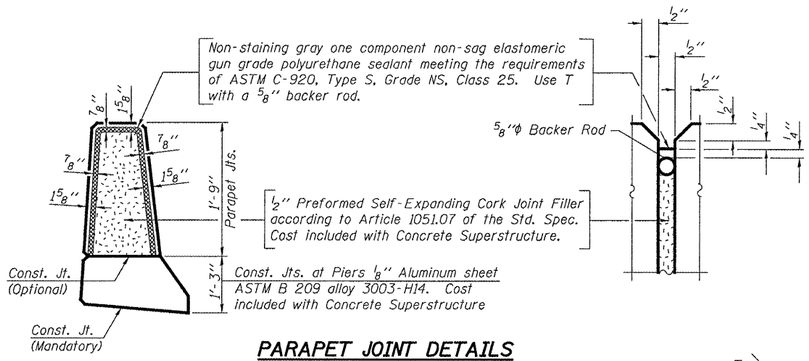

PARAPET JOINT DETAILS

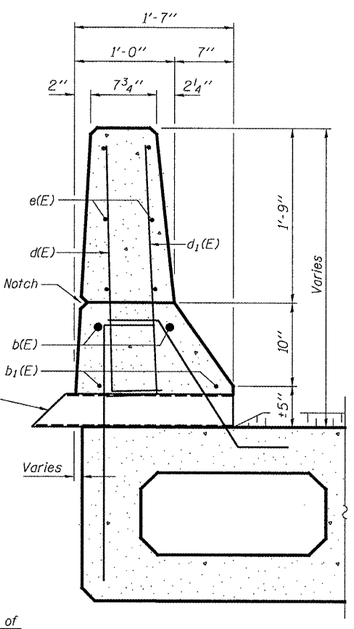

SECTION THRU PARAPET

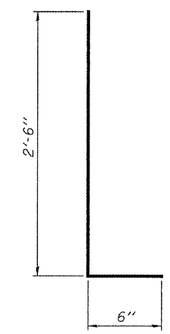

BAR d(E) & d1(E)

MIN. BAR LAP

#5 Bar = 1'-8"
#8 Bar = 3'-5"

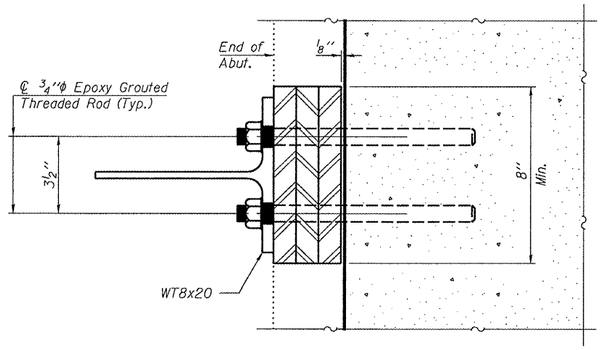

SECTION D-D

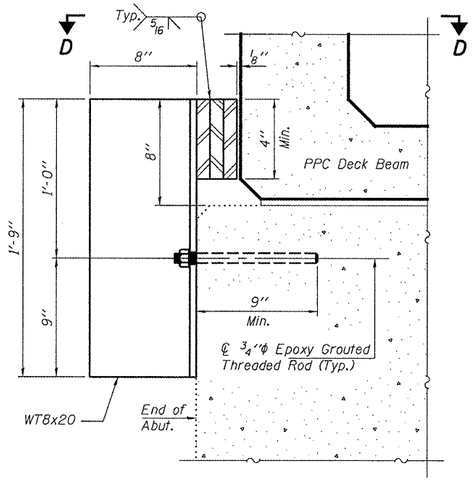

EXPANSION JOINT RETAINER DETAILS

(Cost included with PPC Deck Beams)

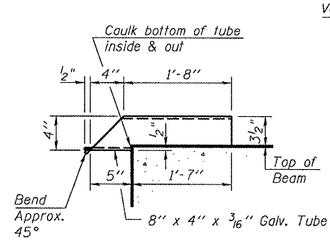

DRAIN DETAIL

BILL OF MATERIAL

Bar	No.	Size	Length	Shape
b(E)	8	#8	22'-2"	
b1(E)	8	#5	21'-3"	
d(E)	82	#4	3'-0"	
d1(E)	90	#5	3'-0"	
e(E)	36	#4	13'-5"	
Concrete Removal			Cu. Yd.	9.3
Concrete Superstructure			Cu. Yd.	9.3
Reinforcement Bars, Epoxy Coated			Pound	1420

Bars indicated thus 1 x 2-#5 etc. indicates 1 line of bars with 2 lengths per line.

DESIGNED	AJB	
CHECKED	VHV	
DRAWN	Steffen	
CHECKED	AJB	VHV

MAY 2, 2008
EXAMINED — ENGINEER OF STRUCTURAL SERVICES
PASSED — Ralph E. Anderson, ENGINEER OF BRIDGES AND STRUCTURES

REPAIR DETAILS
FA 68 OVER SHORT POINT CREEK
LIVINGSTON COUNTY
SN 053-0161