STATE OF ILLINOIS
DEPARTMENT OF TRANSPORTATION

ROUTE NO.	SECTION	COUNTY	TOTAL SHEETS	SHEET NO.
FA 698	(101BR)1	BUREAU	14	14
FED. ROAD DIST. NO. 7		ILLINOIS	FED. AID PROJECT-	

SHEET NO. 5
5 SHEETS

Contract Number: 66829

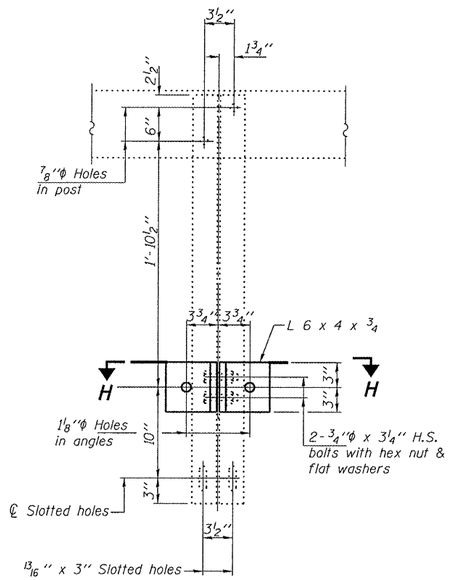

SECTION G-G

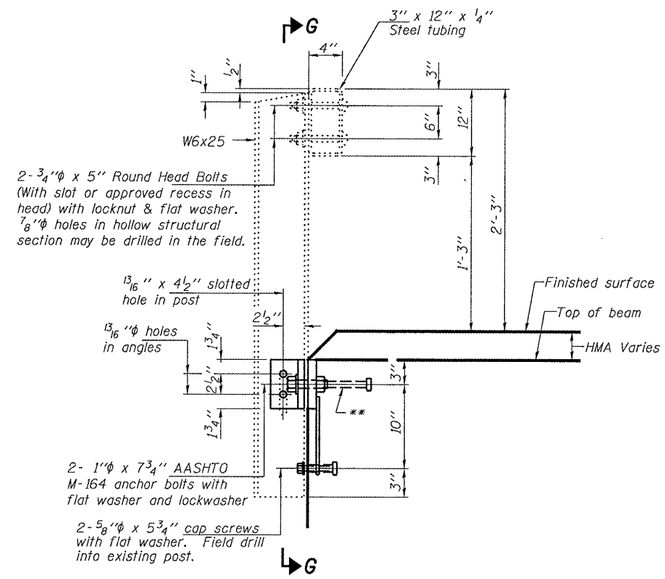

SECTION AT RAIL POST
See sheet 3 of 5 for rail post spacing.

Notes:
All field drilled holes shall be coated with an approved zinc rich paint before erection.
Steel rail elements shall be galvanized according to Article 509.05 of the Standard Specifications.

** The studs of the anchor devices shall be placed below the top reinforcement bars and the outermost longitudinal reinforcement bar shall be placed directly above the studs of the rail post anchor device.

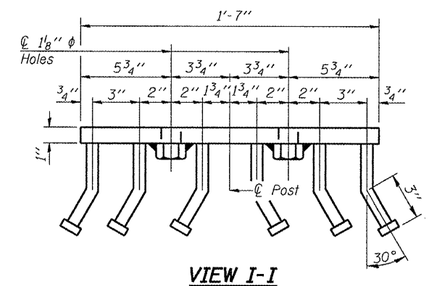

VIEW I-I

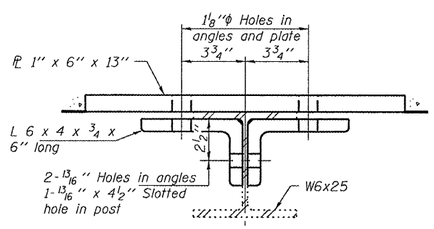

SECTION H-H

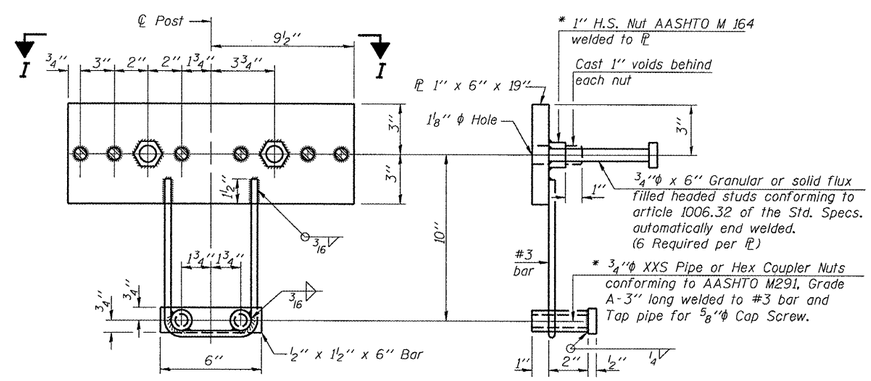

ANCHOR DEVICE

* Threaded areas shall be plugged or blocked off during casting of beam. Galvanized after fabrication.

BILL OF MATERIAL

Item	Unit	Quantity
Removing & Re-erecting Existing Railing	Foot	105

DESIGNED		ATH
CHECKED		AJB
DRAWN		Steffen
CHECKED	ATH	AJB

MAY 6, 2008
EXAMINED A. Carl Przybylski
ENGINEER OF STRUCTURAL SERVICES
PASSED Ralph E. Anderson
ENGINEER OF BRIDGES AND STRUCTURES

RAILING DETAILS
F.A. RT. 698 OVER
PIKE CREEK
BUREAU COUNTY
SN 006-0104

...\deck_beams_fy08\0060104.dgn 06-May-08 13:54:48