6-13-08 Letting, Item 345

68012 66+4=70

ROUTE NO.	SECTION	COUNTY	TOTAL SHEETS	SHEET NO.
VAR	*	VAR	66	1
FED. ROAD DIST. NO. 4		ILLINOIS	FED. AID PROJECT	

PROJECT ENGINEER: JIM MILLER (309) 671-3451

LIASON ENGINEER: LEISA LASTER (309) 671-3481

FOR INDEX OF SHEETS
SEE SHEET 2

LIST OF STANDARDS

000001-05
701001-01
701006-02
701011-01
701201-02
701301-02
701901

STATE OF ILLINOIS
DEPARTMENT OF TRANSPORTATION
DIVISION OF HIGHWAYS

PLAN FOR PROPOSED FEDERAL AID HIGHWAY

VARIOUS ROUTES
VARIOUS COUNTIES
SECTION D4 SCOUR MITIGATION 2006
C-94-346-99

* D4 SCOUR MITIGATION 2006

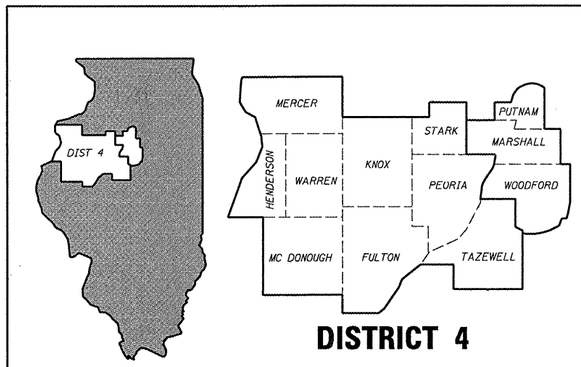

DISTRICT 4

D - 94 - 101 - 99

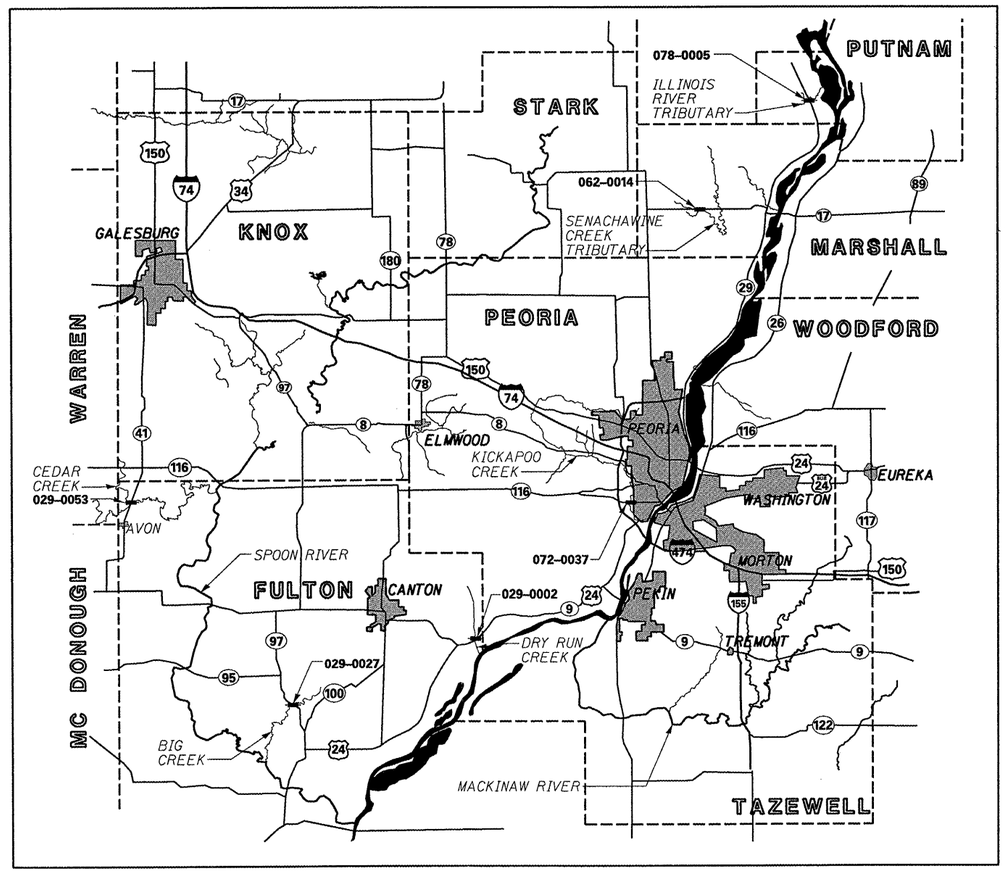

N

DESCRIPTION OF WORK

INSTALLATION OF SCOUR COUNTERMEASURES FOR 6 BRIDGES INCLUDING MINIMAL CHANNEL SHAPING & EXCAVATION ALONG WITH PLACEMENT OF GABIONS, SLOPE MATRESS OR RIPRAP REVETMENT SYSTEMS. ROW TAKING REQUIRED.

TOTAL SHEETS = 66

ENGLISH RATIOS

1" = 5'
1" = 10'
1" = 20'
1" = 30'
1" = 50'

PLANS HAVE BEEN PREPARED USING STANDARD ENGINEERING SCALES. REPRODUCED PLANS WILL NOT CONFORM TO STANDARD SCALES. IN MAKING MEASUREMENTS ON REPRODUCED PLANS, THE ABOVE SCALES MAY BE USED.

J.U.L.I.E.
JOINT UTILITY LOCATION INFORMATION FOR EXCAVATION
1-800-892-0123

STATE OF ILLINOIS
DEPARTMENT OF TRANSPORTATION
DIVISION OF HIGHWAYS

SUBMITTED Feb 11 20 08 WSL
J. E. Crane
REGION 3 ENGINEER

March 21, 20 08
Eric E. Harm
Interim ENGINEER OF DESIGN AND ENVIRONMENT

March 21, 20 08
Christine M. Reed
DIRECTOR, DIVISION OF HIGHWAYS

CONTRACT NO. 68012
CATALOG NO. 32124-01D

PRINTED BY THE AUTHORITY OF THE STATE OF ILLINOIS

MAURER & STUTZ, INC.
ENGINEERS SURVEYORS

STATE OF ILLINOIS
DEPARTMENT OF TRANSPORTATION

ROUTE NO.	SECTION	COUNTY	TOTAL SHEETS	SHEET NO.
VAR	*	VAR	66	2
FED. ROAD DIST. NO. 4		ILLINOIS	FED. AID PROJECT	

* D4 SCOUR MITIGATION 2006

INDEX OF SHEETS

SHEET NUMBER	DESCRIPTION
1	COVER SHEET
2	DISPOSITION OF UTILITIES, GENERAL NOTES AND SUGGESTED SEQUENCE OF CONSTRUCTION
3	SUMMARY OF QUANTITIES
4	SCHEDULE OF QUANTITIES
5-15	MITIGATION DETAILS FOR STRUCTURE NO. 029-0002
16-23	MITIGATION DETAILS FOR STRUCTURE NO. 029-0027
24-34	MITIGATION DETAILS FOR STRUCTURE NO. 029-0053
35-41	MITIGATION DETAILS FOR STRUCTURE NO. 062-0014
42-56	MITIGATION DETAILS FOR STRUCTURE NO. 072-0037
57-63	MITIGATION DETAILS FOR STRUCTURE NO. 078-0005
64-66	DEWATERING SYSTEM DETAILS
*4A-4D	REMOVE AND REERECT STEEL PLATE BEAM GUARDRAIL

GENERAL NOTES

1. Plan dimensions and details relative to existing structure (including High Water Elevation) have been taken from existing plans and are subject to nominal constuction variations. It shall be the Contractor's responsibility to verify such dimensions and details in the field and make necessary approved adjustments prior to construction or ordering of materials. Such variations shall not be cause for additional compensation for a change in the scope of the work. However, the Contractor will be paid for the quantity actually furnished at the unit price bid for the work.
2. All information shown in each structure's Waterway Information Table was provided by the Illinois Department of Transportation.
3. Commitments are not to be altered without the written approval of all parties to which the commitment was made.
4. The Contractor shall be responsible for diverting the water flow from the construction area of each site. The Contractor may use either method of dewatering as described in the Dewatering Special Provision.
5. During site preparation, areas below the final grade shall be brought to grade by placing compacted layers of Granular Subbase Material, Type C; areas of soft or otherwise unsuitable subgrade soils shall be excavated and replaced with compacted layers of Granular Subbase Material, Type C. Removal and replacement of unsuitable material shall be as directed by the Engineer and will be paid for in accordance to Article 109.04 (Force Account Basis) of the Standard Specifications. An assumed quantity for Granular Subbase Material, Type C, is included as part of each structure's mitigation details.
6. Layout of scour protection systems may be varied in the field to suit ground conditions as directed by the engineer.
7. All areas disturbed during construction shall be graded, fertilized, seeded and mulched as directed by the Engineer. Sections 250 and 251 of the Standard Specifications shall govern this work.
8. It is anticipated that the majority of this work will not require highway traffic lane closures. Lane closures will be permitted on a limited basis and are restricted to one-lane daytime only closures in accordance to IDOT Standards 701201 and 701301.
9. GABION ANCHOR STAKE layout shown on plan sheets is for information and estimation purposes only. Actual layout shall be determined in the field by the Contractor and approved by the Engineer and shall comform to the procedures stated in the special provisions.

SUGGESTED SEQUENCE OF CONSTRUCTION

1. Install dewatering system and divert water flow from the construction area.
2. Excavate to the lines, grades, contours, and dimensions shown. The prepared area shall be inspected and approved by the Engineer before further work can take place.
3. Install filter fabric on the graded surfaces as shown on the drawings.
4. Install site specific scour countermeasures. See detail sheets for specific installation procedures.
5. Remove dewatering system. Grade and seed ground disturbed during construction.

COMMITMENTS

1. S/N 072-0037 - The Contractor is required to obtain a Right of Entry Permit from the BNSF Railroad before working on their Right-of -Way.

Disposition of Utilities

Structure Number	County	Route	Crossing	Utility	Owner	Location	Action
029-0053	Fulton	IL 41	Cedar Creek	UG Gas	Illinois Power	ES	Relocate as Necessary
062-0014	Marshall	IL 17	Senachwine Creek Trib.	UG Telephone	Unknown	S ROW	Caution
072-0037	Peoria	IL 116	Kickapoo Creek	San Sewer	GPSD	W Creek	See Plans
078-0005	Putnam	IL 29	Illinois River Trib.	UG Telephone	Verizon, Inc.	W ROW	Caution

ILLINOIS DEPARTMENT OF TRANSPORTATION

DISPOSITION OF UTILITIES,
GENERAL NOTES AND SUGGESTED
CONSTRUCTION SEQUENCING
SECTION D4 SCOUR MITIGATION 2006
VARIOUS ROUTES, SECTIONS
AND COUNTIES

MAURER STUTZ, INC.
ENGINEERS SURVEYORS

ILLINOIS DEPARTMENT OF TRANSPORTATION

SUMMARY OF QUANTITIES

ROUTE NO.	SECTION	COUNTY	TOTAL SHEETS	SHEET NO.
VAR	*	VAR	66	3
FED. ROAD DIST. NO. 4		ILLINOIS	FED. AID PROJECT	

*** D4 SCOUR MITIGATION 2006**

SUMMARY OF QUANTITIES			TOTAL QUANTITY	CONSTRUCTION TYPE CODE		
				100% STATE		
CODE NO.	ITEM	UNIT		SFTY-2A		
20100110	TREE REMOVAL (6-15 UNITS)	UNIT	22	22		
20200400	EARTH EXCAVATION FOR STILLING BASIN	CU YD	418	418		
20300100	CHANNEL EXCAVATION	CU YD	4370	4370		
25000300	SEEDING, CLASS 3	ACRE	1.0	1.0		
25000400	NITROGEN FERTILIZER NUTRIENT	POUND	90	90		
25000500	PHOSPHORUS FERTILIZER NUTRIENT	POUND	90	90		
25000600	POTASSIUM FERTILIZER NUTRIENT	POUND	90	90		
25100630	EROSION CONTROL BLANKET	SQ YD	1966	1966		
28000250	TEMPORARY EROSION CONTROL SEEDING	POUND	100	100		
28000400	PERIMETER EROSION BARRIER	FOOT	486	486		
28100205	STONE RIPRAP, CLASS A3	TON	341	341		
28100209	STONE RIPRAP, CLASS A5	TON	5299	5299		
28200200	FILTER FABRIC	SQ YD	9556	9556		
28400100	GABIONS	CU YD	1202	1202		
28401000	SLOPE MATTRESS 12"	SQ YD	3155	3155		
31101900	SUBBASE GRANULAR MATERIAL, TYPE C	TON	2167	2167		
50100100	REMOVAL OF EXISTING STRUCTURES	EACH	2	2		
63300205	REMOVAL AND REINSTALLATION OF EXISTING STEEL PLATE BEAM GUARD RAIL, TYPE A	FOOT	50	50		
67100100	MOBILIZATION	L SUM	1	1		
X0301852	DEWATERING STRUCTURE NO. 1	EACH	1	1		
X0301853	DEWATERING STRUCTURE NO. 2	EACH	1	1		
X0301854	DEWATERING STRUCTURE NO. 3	EACH	1	1		
X0301855	DEWATERING STRUCTURE NO. 4	EACH	1	1		
X0301856	DEWATERING STRUCTURE NO. 5	EACH	1	1		
X0301857	DEWATERING STRUCTURE NO. 6	EACH	1	1		
X0323655	GABION ANCHOR STAKE	EACH	489	489		
X7012610	TRAFFIC CONTROL AND PROTECTION, STANDARD 701201	EACH	3	3		
Z0048665	RAILROAD PROTECTIVE LIABILITY INSURANCE	L SUM	1	1		

MAURER & STUTZ, INC.
ENGINEERS SURVEYORS

ILLINOIS DEPARTMENT OF TRANSPORTATION

SCHEDULE OF QUANTITIES

ROUTE NO.	SECTION	COUNTY	TOTAL SHEETS	SHEET NO.
VAR	*	VAR	66	4
FED. ROAD DIST. NO. 4		ILLINOIS	FED. AID PROJECT	

*** D4 SCOUR MITIGATION 2006**

SCHEDULE OF QUANTITIES			STRUCTURE NUMBER					
	ITEM	UNIT	029-0002	029-0027	029-0053	062-0014	072-0037	078-0005
	TREE REMOVAL (6-15 UNITS)	UNIT	0	22	0	0	0	0
	EARTH EXCAVATION FOR STILLING BASIN	CU YD	418	0	0	0	0	0
	CHANNEL EXCAVATION	CU YD	145	1056	1657	89	1403	20
	SEEDING CLASS 3	ACRE	0.1	0.02	0.07	0.02	.17	0.02
	EROSION CONTROL BLANKET	SQ YD	370	200	440	28	820	108
	PERIMETER EROSION BARRIER	FOOT	39	25	0	0	422	0
	STONE RIPRAP, CLASS A3	TON	0	0	0	0	341	0
	STONE RIPRAP, CLASS A5	TON	155	159	718	550	2850	867
	FILTER FABRIC	SQ YD	671	1242	2902	324	3717	700
	GABIONS	CU YD	415	337	450	0	0	0
	SLOPE MATTRESS 12"	SQ YD	356	624	2175	0	0	0
	SUBBASE GRANULAR MATERIAL, TYPE C	TON	708	590	869	0	0	0
	REMOVAL OF EXISTING STRUCTURES	EACH	0	0	2	0	0	0
	REMOVAL AND REINSTALLATION OF EXISTING STEEL PLATE BEAM GUARD RAIL, TYPE A	EACH	0	0	0	50	0	0
	DEWATERING STRUCTURE NO. 1	EACH	1	0	0	0	0	0
	DEWATERING STRUCTURE NO. 2	EACH	0	1	0	0	0	0
	DEWATERING STRUCTURE NO. 3	EACH	0	0	1	0	0	0
	DEWATERING STRUCTURE NO. 4	EACH	0	0	0	1	0	0
	DEWATERING STRUCTURE NO. 5	EACH	0	0	0	0	1	0
	DEWATERING STRUCTURE NO. 6	EACH	0	0	0	0	0	1
	GABION ANCHOR STAKE	EACH	239	102	148	0	0	0

QUANTITIES NOT OTHERWISE SHOWN

ITEM	UNIT	TOTAL	DESCRIPTION
TRAFFIC CONTROL AND PROTECTION, STANDARD 701201	EACH	3	SEE GENERAL NOTE #8

ITEM	UNIT	TOTAL	LOCATION
SEEDING, CLASS 3	ACRE	1.0	JOBSITE
NITROGEN FERTILIZER NUTRIENT	POUND	90	JOBSITE
PHOSPHORUS FERTILIZER NUTRIENT	POUND	90	JOBSITE
POTASSIUM FERTILIZER NUTRIENT	POUND	90	JOBSITE
EROSION CONTROL BLANKET	SQ YD	1956	JOBSITE
TEMP. EROSION CONTROL SEEDING	POUND	100	JOBSITE
MOBILIZATION	L SUM	1	JOBSITE

MAURER ▲ STUTZ, INC.
ENGINEERS SURVEYORS

F.A. RTE.	SECTION	COUNTY	TOTAL SHEETS	SHEET NO.
				4A
FED. ROAD DIST. NO.	ILLINOIS	FED. AID PROJECT		

68012

4A

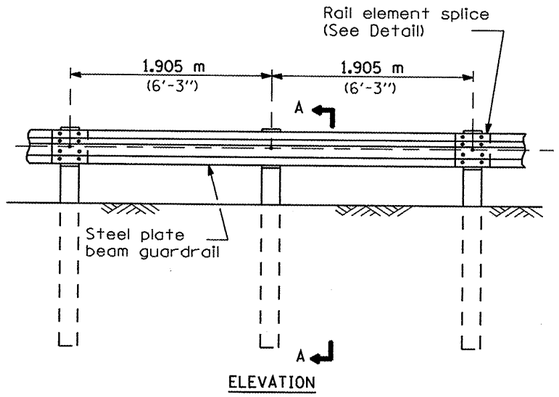

TYPE A

1.905 m (6'-3") Typical post spacing

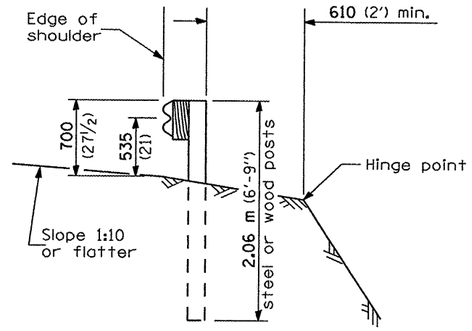

SECTION A-A

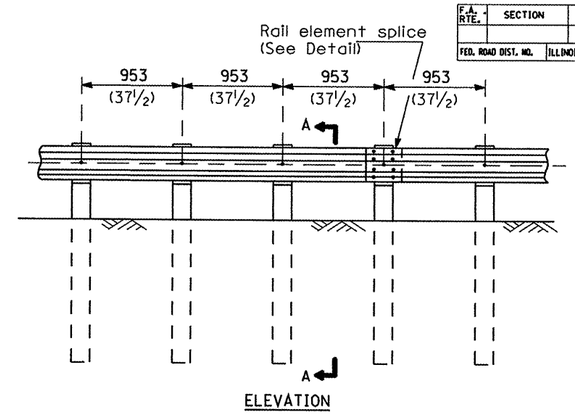

TYPE B

953 (37½) Closed post spacing

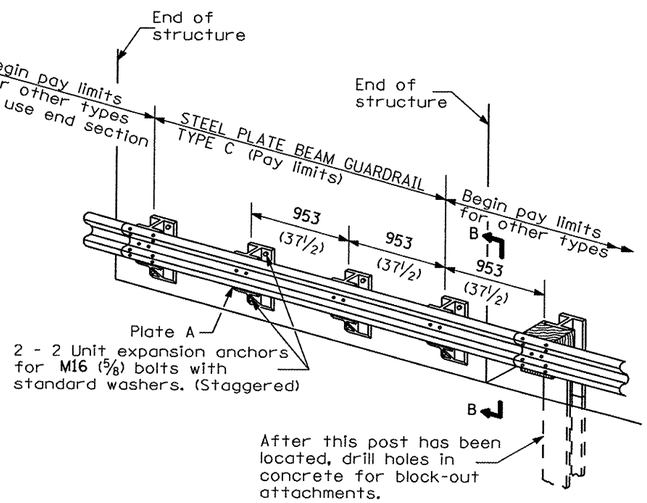

TYPE C

953 (37½) Block-out spacing

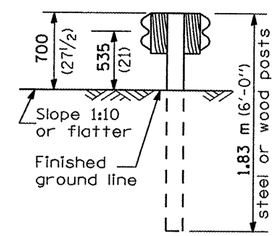

SECTION C-C

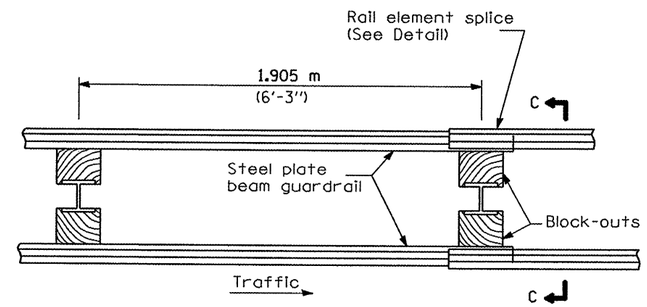

PLAN

TYPE D

Double steel plate beam guardrail
1.905 m (6'-3") typical post spacing

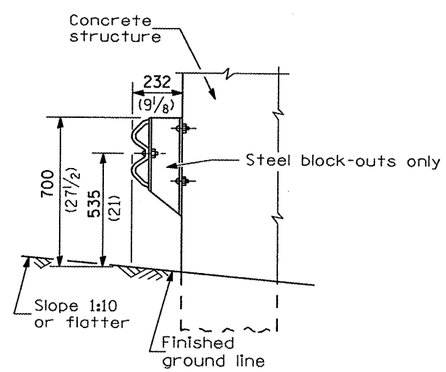

SECTION B-B

GENERAL NOTES

All slope ratios are expressed as units of vertical displacement to units of horizontal displacement (V:H).

All dimensions are in millimeters (inches) unless otherwise shown.

The existing steel posts may be drilled to match the bolt pattern shown herein for the wood block-out, or a new steel post shall be provided.

This detail is applicable to the guardrail system used prior to January 1, 2007. For details on the Midwest Guardrail System, see Standard 630001.

REMOVE AND REERECT STEEL PLATE BEAM GUARDRAIL

(Sheet 1 of 4)

DETAIL

68012

F.A. RTE.	SECTION	COUNTY	TOTAL SHEETS	SHEET NO.
				48
FED. ROAD DIST. NO.	ILLINOIS	FED. AID PROJECT		

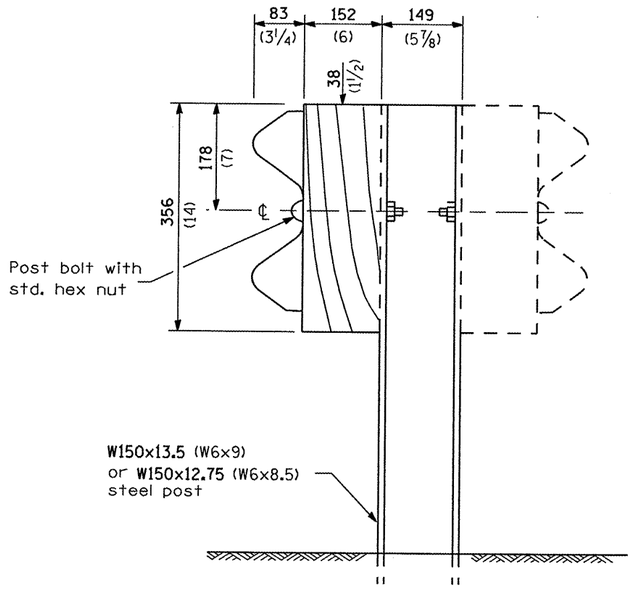

STEEL POST CONSTRUCTION

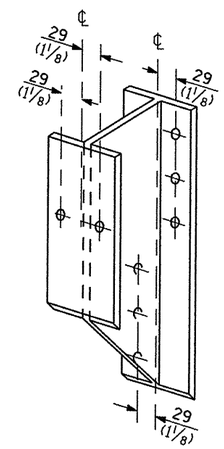

STEEL BLOCK-OUT DETAIL

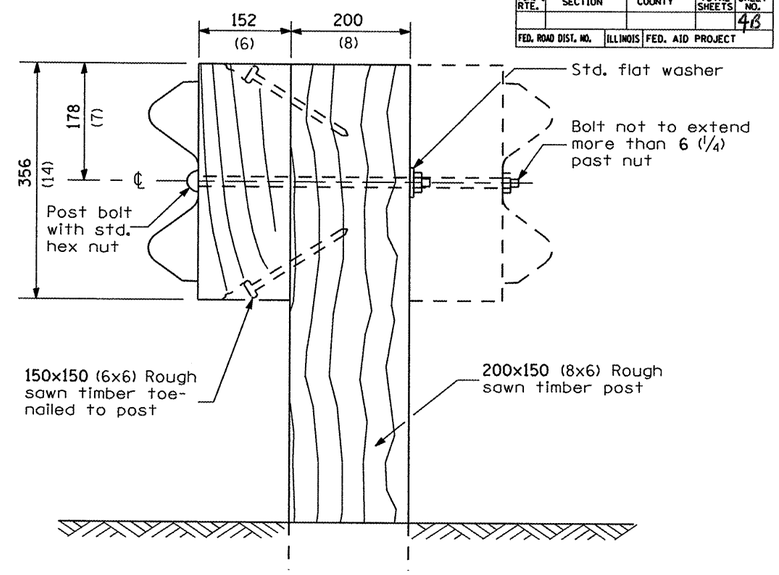

WOOD POST CONSTRUCTION

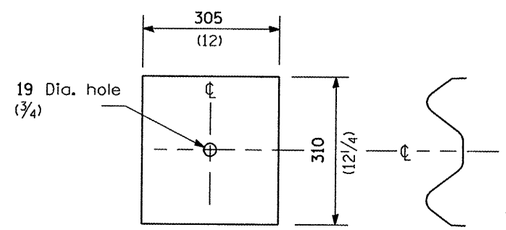

NOTE

Plate A shall be placed between rail element and block-out at non-splice mounting points only when steel block-outs are used.

PLATE A

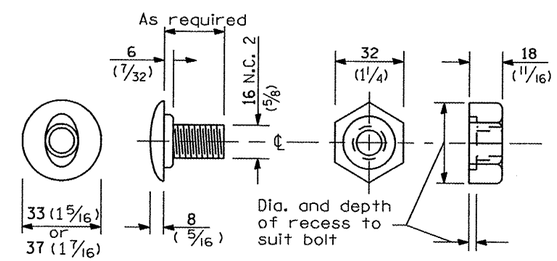

POST OR SPLICE BOLT & NUT

48

REMOVE AND REERECT
STEEL PLATE BEAM GUARDRAIL
(Sheet 2 of 4)

DETAIL

F.A. RTE.	SECTION	COUNTY	TOTAL SHEETS	SHEET NO.
				4C
FED. ROAD DIST. NO.	ILLINOIS	FED. AID PROJECT		

68012

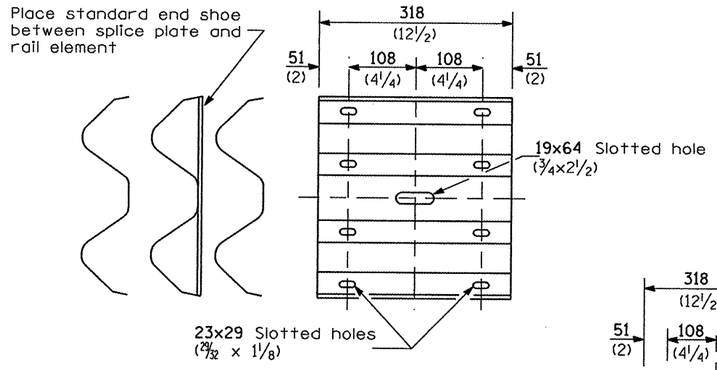

SPLICE PLATE

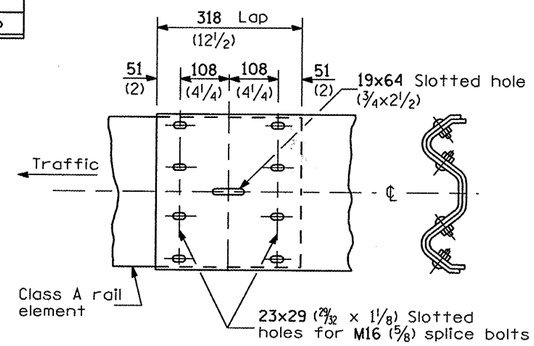

RAIL ELEMENT SPLICE

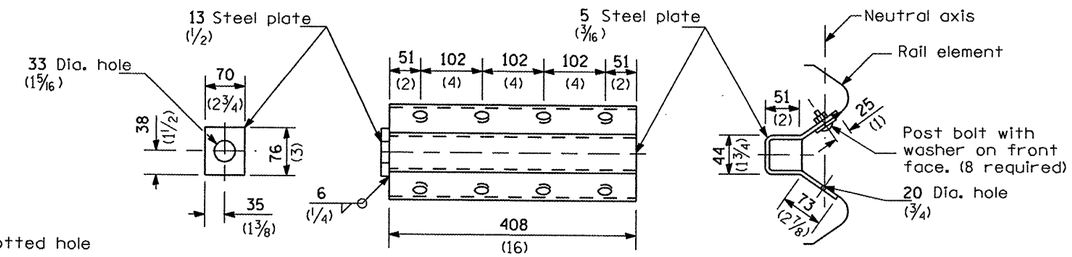

NOTE

Anchor plate T shall be used to attach cable assembly to guardrail when required on traffic barrier terminals.

ANCHOR PLATE T DETAILS

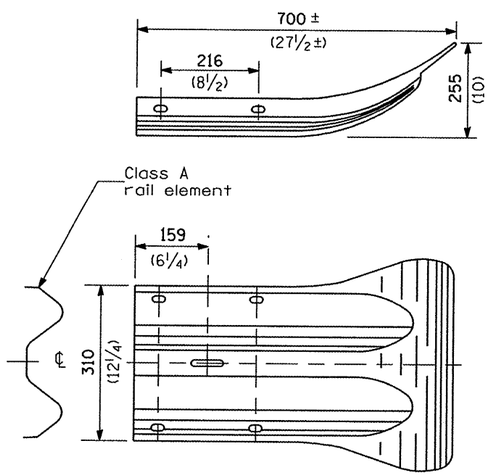

END SECTION

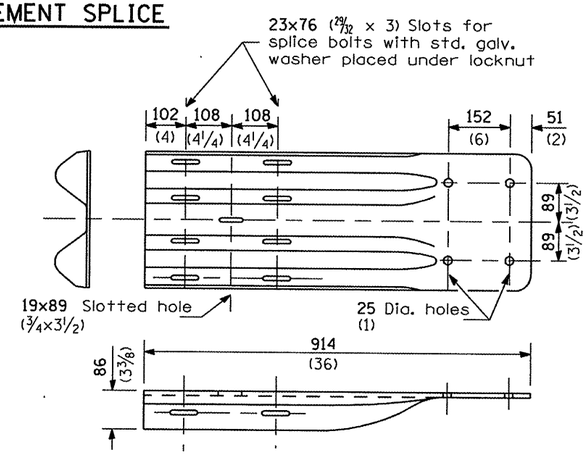

NOTE

When end shoe is attached to a bridge parapet which has an expansion joint, the bolts shall be provided with a locknut or double nut and shall be tightened only to a point that will allow guardrail movement.

The standard end shoe shall be attached to the concrete with pre-drilled or self-drilling anchor bolts. The anchor cone shall be set flush with the surface of the concrete.

Externally threaded studs protruding from the surface of the concrete will not be permitted.

END SHOE

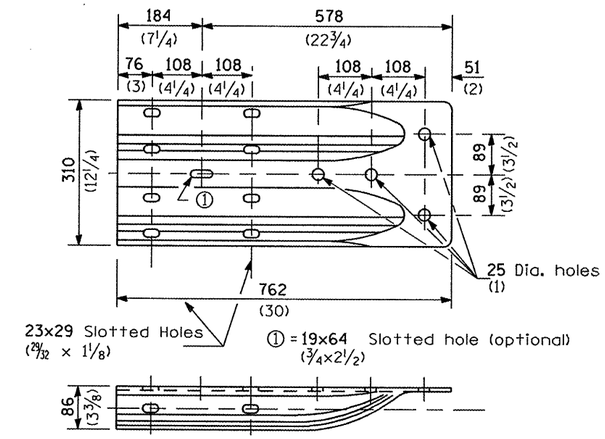

ALTERNATE END SHOE

REMOVE AND REERECT STEEL PLATE BEAM GUARDRAIL

(Sheet 3 of 4)

DETAIL

AC

F.A. RTE.	SECTION	COUNTY	TOTAL SHEETS	SHEET NO.
				4D
FED. ROAD DIST. NO.	ILLINOIS	FED. AID PROJECT		

68012

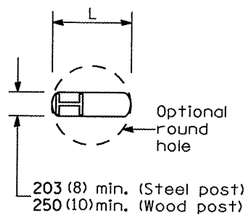

PLAN

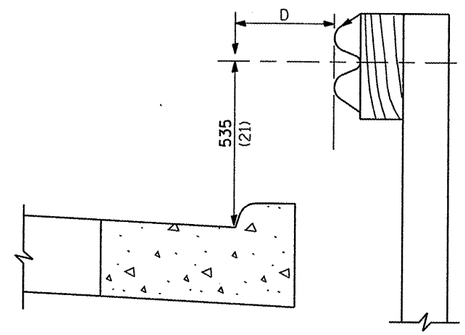

Note:
If it is necessary for D to be more than 300 (12) and less than 3.0 m (10'-0") type M-5 (M-2) curb and gutter (Std. 606001) shall be used in front of and in advance of the guardrail.

GUARDRAIL PLACED BEHIND CURB

(D = 0 desirable to 300 (12) maximum)

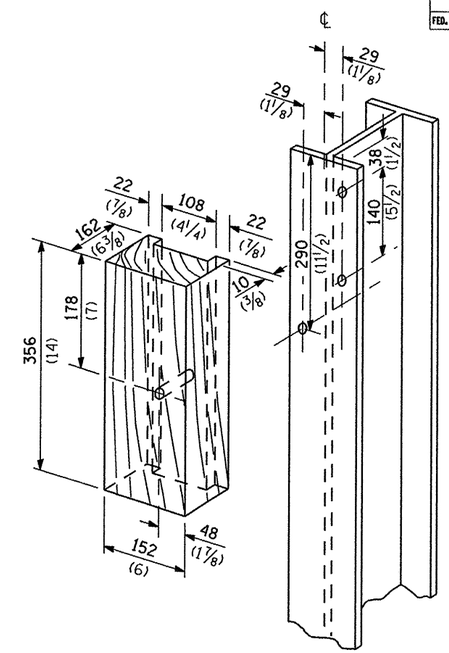

WOOD BLOCK-OUT AND STEEL POST DETAILS

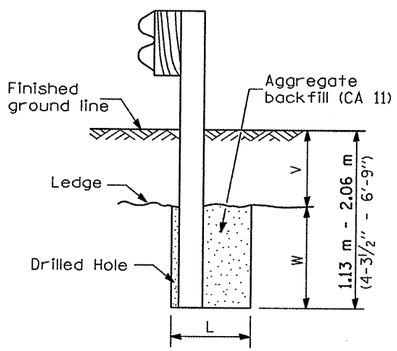

Note:
Ledge line is top of rock ledge or hard slag fill.

ELEVATION

FOOTING FOR POST WHEN IMPERVIOUS MATERIAL IS ENCOUNTERED

V	W	L	
		Steel Post	Wood Post
0 - 460 (0 - 18)	610 (24)	530 (21)	580 (23)
>460 - 825 (>18 - 41.5)	305 (12)	203 (8)	250 (10)
>825 - 1.13 m (>41.5 - 53.5)	305 - 0 (12 - 0)	203 (8)	250 (10)

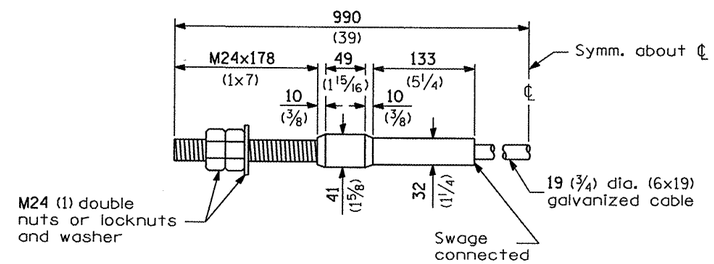

CABLE ASSEMBLY

(18,100 kg (40,000 lbs.) min. breaking strength)
Tighten to taut tension.

4D

REMOVE AND REERECT STEEL PLATE BEAM GUARDRAIL

(Sheet 4 of 4)

DETAIL

BENCHMARK: WHITE PAINT MARK ON TOP OF CONCRETE WINGWALL ELEV. = 100.00 FT. (ASSUMED)

EXISTING STRUCTURE: SN 029-0002 IS A 44'-0" WIDE BY 21'-4" LONG R.C. SLAB ON R.C. CLOSED ABUTMENTS.

ROUTE NO.	SECTION	COUNTY	TOTAL SHEETS	SHEET NO.
VAR	*	VAR	66	5
FED. ROAD DIST. NO. 4		ILLINOIS	FED. AID PROJECT	

* D4 SCOUR MITIGATION 2006

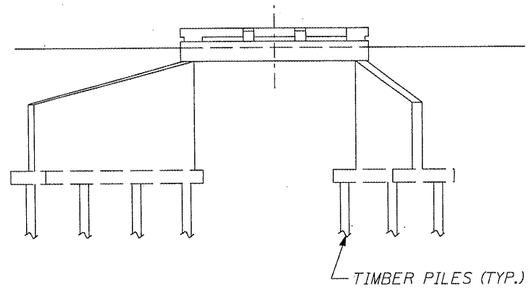

ELEVATION

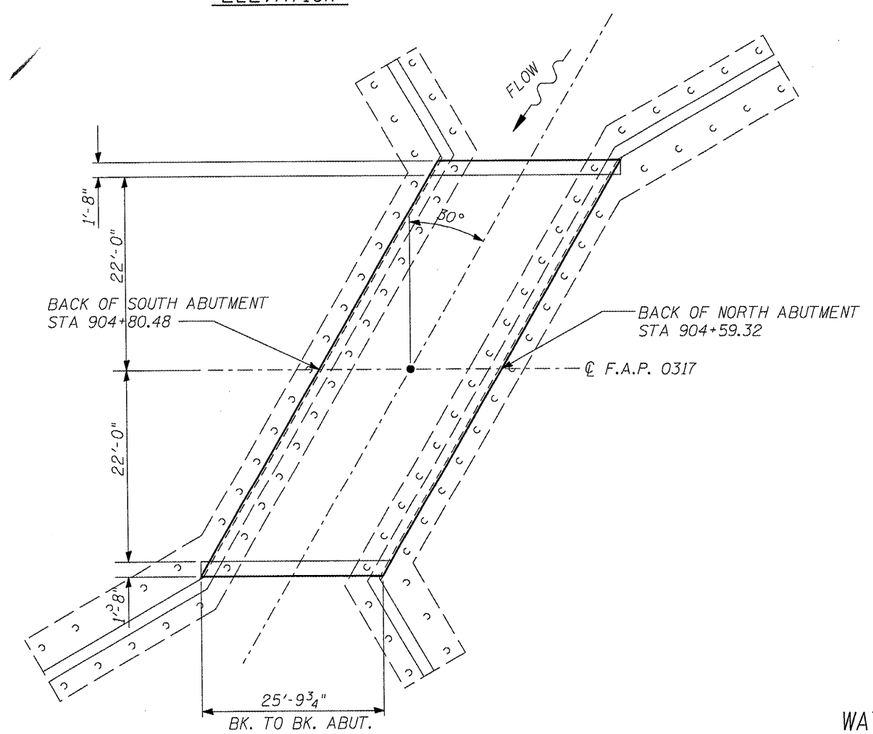

PLAN

EXISTING BRIDGE

INDEX OF SHEETS

SHEET NUMBER	DESCRIPTION
1	GENERAL PLAN AND PROFILE, SUMMARY OF QUANTITIES, LOCATION MAP
2	R.O.W. PLAN
3	SITE PLAN
4	DIMENSION PLAN
5-6	SITE PROFILE
7-11	CROSS SECTIONS

BILL OF MATERIALS

ITEM	UNIT	TOTAL
EARTH EXCAVATION FOR STILLING BASIN	CU YD	418
CHANNEL EXCAVATION	CU YD	145
PERIMETER EROSION BARRIER	FOOT	38.5
STONE RIP-RAP, CLASS A5	TONS	155
FILTER FABRIC	SQ YD	671
GABIONS	CU YD	415
SLOPE MATTRESS 12"	SQ YD	356
SUB-BASE GRANULAR MATERIAL, TYPE C	TONS	708
GABION ANCHOR STAKES	EACH	239
DEWATERING STRUCTURE NO. 1	EACH	1

DAVID L. MAURER 062-030577 LICENSED PROFESSIONAL ENGINEER OF ILLINOIS

David L. Maurer, P.E.
Exp. Date 11/2009
P.E. No.: 062-030577

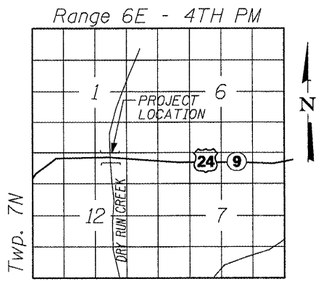

LOCATION SKETCH

WATERWAY/SCOUR INFORMATION

DESIGN FLOOD	100 YRS
DRAINAGE AREA	0.6 SQ MI
FLOW	974 CFS
FLOW DEPTH	8.11 FT
OPENING REQUIRED	82 SQ FT
OPENING PROVIDED	154 SQ FT
CONTRACTION SCOUR DEPTH	7 FT

ILLINOIS DEPARTMENT OF TRANSPORTATION

GENERAL PLAN & ELEVATION
S.N. 029-0002
F.A.P. 0317 (U.S. RTE. 24)
OVER DRY RUN CREEK
FULTON COUNTY

SHEET 1 OF 11

MAURER & STUTZ, INC. ENGINEERS SURVEYORS

ROUTE NO.	SECTION	COUNTY	TOTAL SHEETS	SHEET NO.
VAR	*	VAR	66	6
FED. ROAD DIST. NO. 4		ILLINOIS	FED. AID PROJECT	

*** D4 SCOUR MITIGATION 2006**

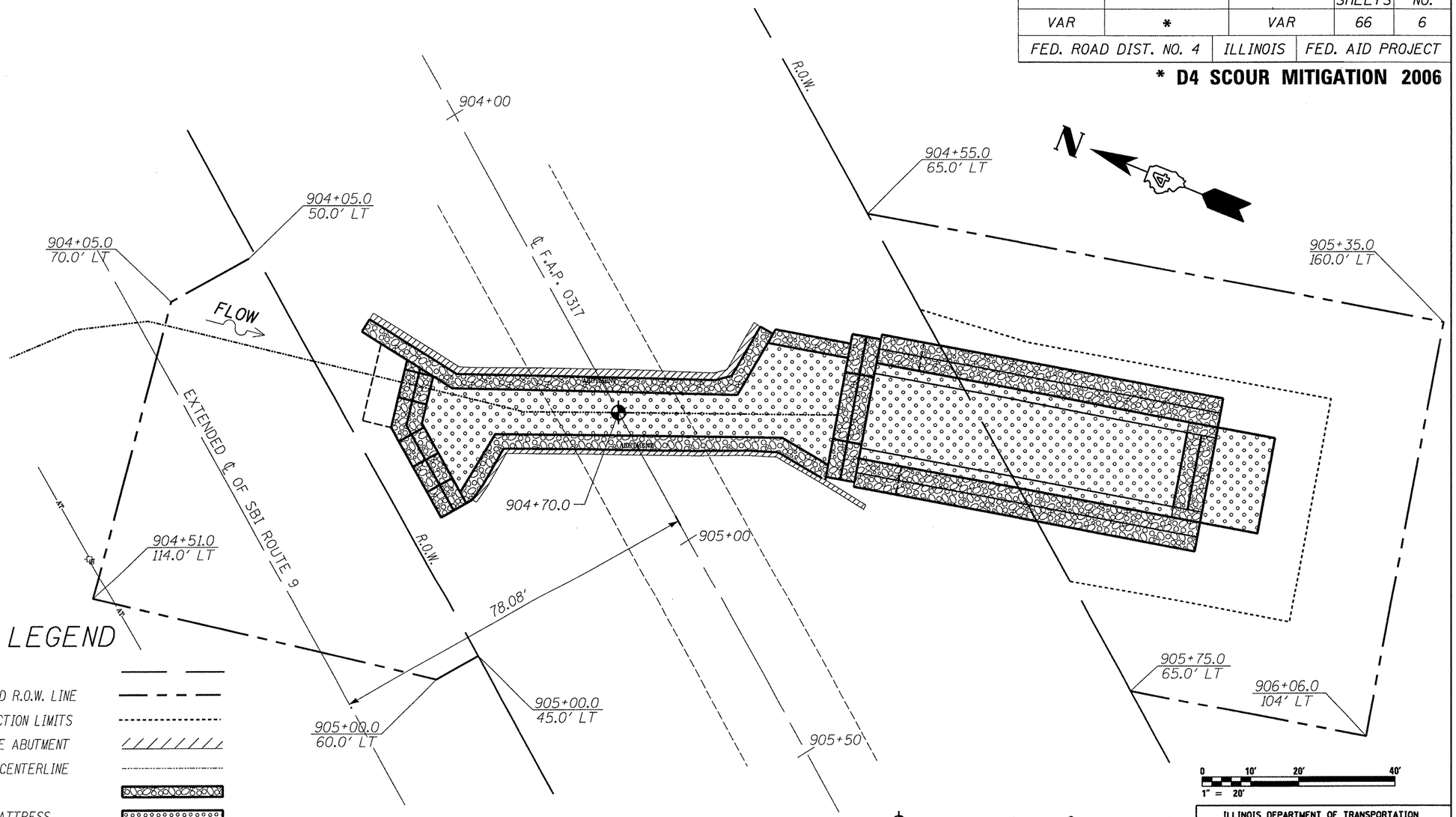

LEGEND

- R.O.W.
- PROPOSED R.O.W. LINE
- CONSTRUCTION LIMITS
- CONCRETE ABUTMENT
- STREAM CENTERLINE
- GABION
- SLOPE MATTRESS
- AERIAL TELEPHONE
- TELEPHONE POLE
- TELEPHONE RISER

⌖ = INTERSECTION OF ℄ OF EXISTING STRUCTURE AND ℄ OF F.A.P. 0317

ILLINOIS DEPARTMENT OF TRANSPORTATION

PROPOSED R.O.W. PLAN
S.N. 029-0002
F.A.P. 0317 (U.S. RTE. 24)
OVER DRY RUN CREEK
FULTON COUNTY
SHEET 2 OF 11

SCALE: 1" = 20'

MAURER ▲ STUTZ, INC.
ENGINEERS SURVEYORS

ROUTE NO.	SECTION	COUNTY	TOTAL SHEETS	SHEET NO.
VAR	*	VAR	66	7
FED. ROAD DIST. NO. 4		ILLINOIS	FED. AID PROJECT	

* D4 SCOUR MITIGATION 2006

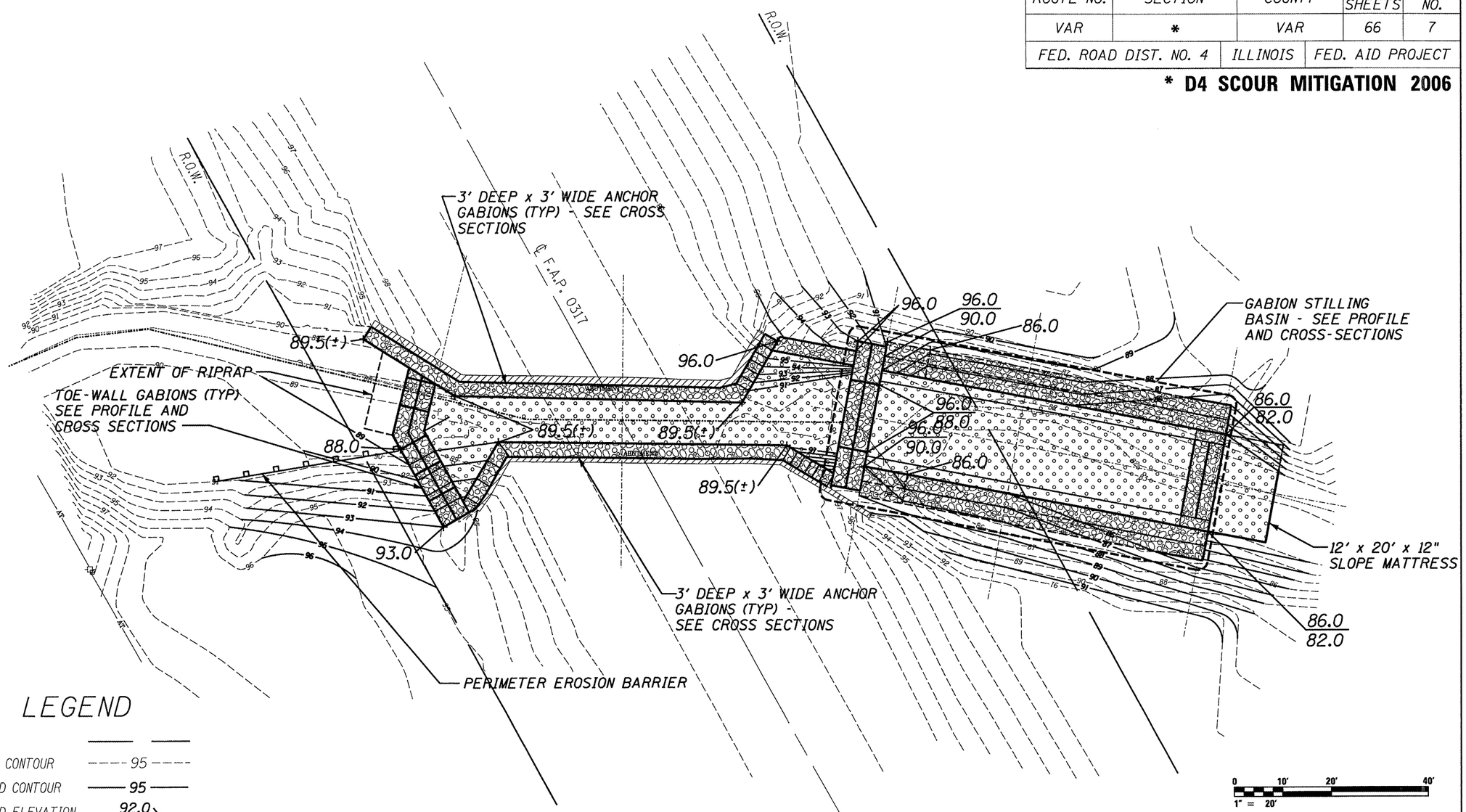

LEGEND

R.O.W.	
EXISTING CONTOUR	95
PROPOSED CONTOUR	95
PROPOSED ELEVATION	92.0
CONCRETE ABUTMENT	
STREAM CENTERLINE	
GABION	
SLOPE MATTRESS	

0 10' 20' 40'
1" = 20'

ILLINOIS DEPARTMENT OF TRANSPORTATION

PROPOSED SITE PLAN
S.N. 029-0002
F.A.P. 0317 (U.S. RTE. 24)
OVER DRY RUN CREEK
FULTON COUNTY
SHEET 3 OF 11

SCALE: 1" = 20'

MAURER & STUTZ, INC.
ENGINEERS SURVEYORS

ROUTE NO.	SECTION	COUNTY	TOTAL SHEETS	SHEET NO.
VAR	*	VAR	66	8
FED. ROAD DIST. NO. 4	ILLINOIS	FED. AID PROJECT		

* D4 SCOUR MITIGATION 2006

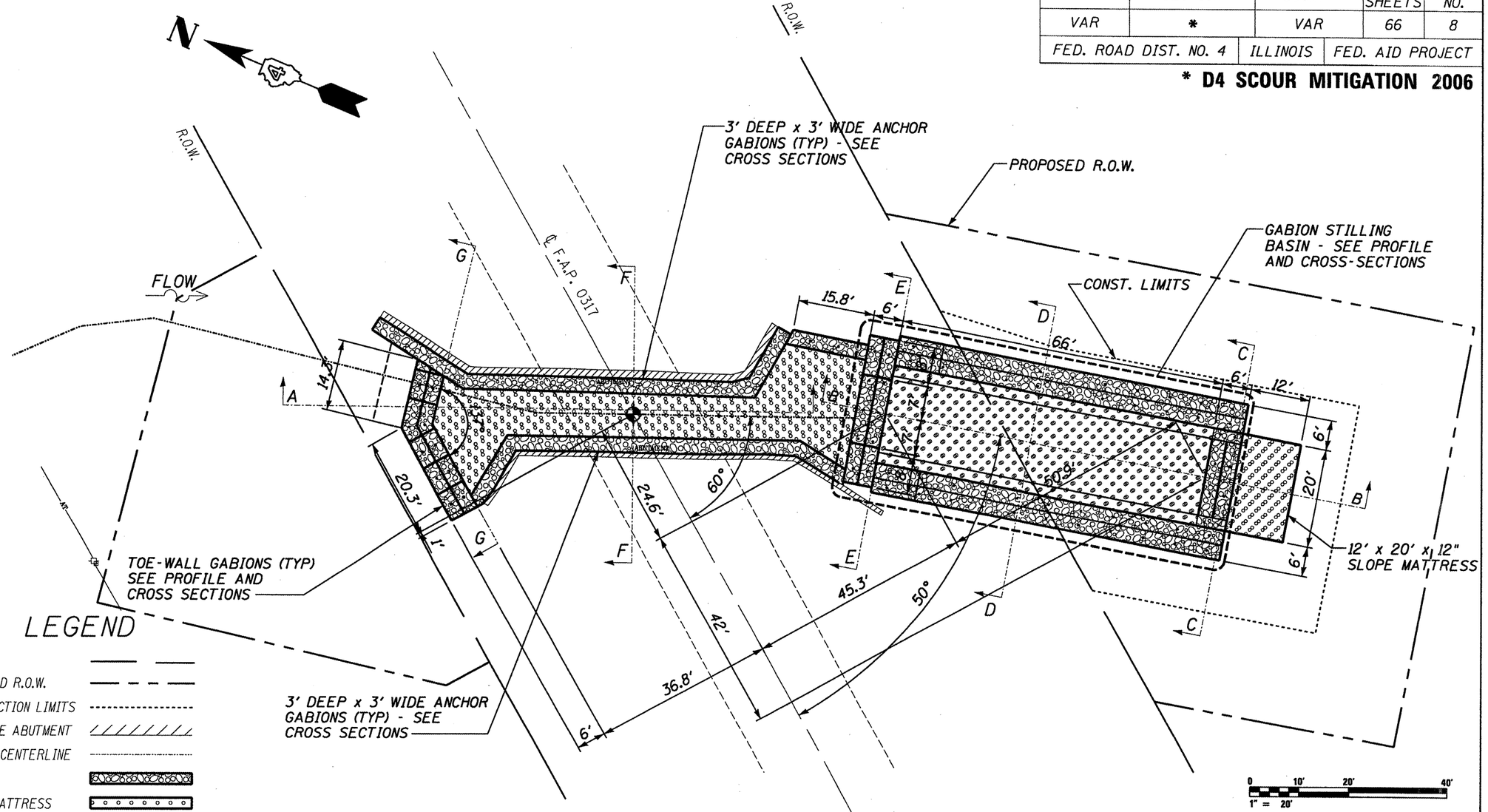

LEGEND

- R.O.W.
- PROPOSED R.O.W.
- CONSTRUCTION LIMITS
- CONCRETE ABUTMENT
- STREAM CENTERLINE
- GABION
- SLOPE MATTRESS
- GABION ANCHOR
- AERIAL TELEPHONE
- TELEPHONE POLE
- TELEPHONE RISER

NOTE: PROBE FOR FOOTINGS BEFORE INSTALLING ANCHOR STAKES. INSTALL NEXT TO FACE OF FOOTING IF DEPTH DOES NOT ALLOW INSTALLATION ON TOP OF FOOTING.

⊕ = INTERSECTION OF ℄ OF EXISTING STRUCTURE AND ℄ OF S.B.I. ROUTE 9

0 10' 20' 40'
1" = 20'

ILLINOIS DEPARTMENT OF TRANSPORTATION
PROPOSED DIMENSION PLAN
S.N. 029-0002
F.A.P. 0317 (U.S. RTE. 24)
OVER DRY RUN CREEK
FULTON COUNTY
SHEET 4 OF 11

SCALE: 1" = 20'

MAURER & STUTZ, INC.
ENGINEERS SURVEYORS

ROUTE NO.	SECTION	COUNTY	TOTAL SHEETS	SHEET NO.
VAR	*	VAR	66	9
FED. ROAD DIST. NO. 4		ILLINOIS	FED. AID PROJECT	

*** D4 SCOUR MITIGATION 2006**

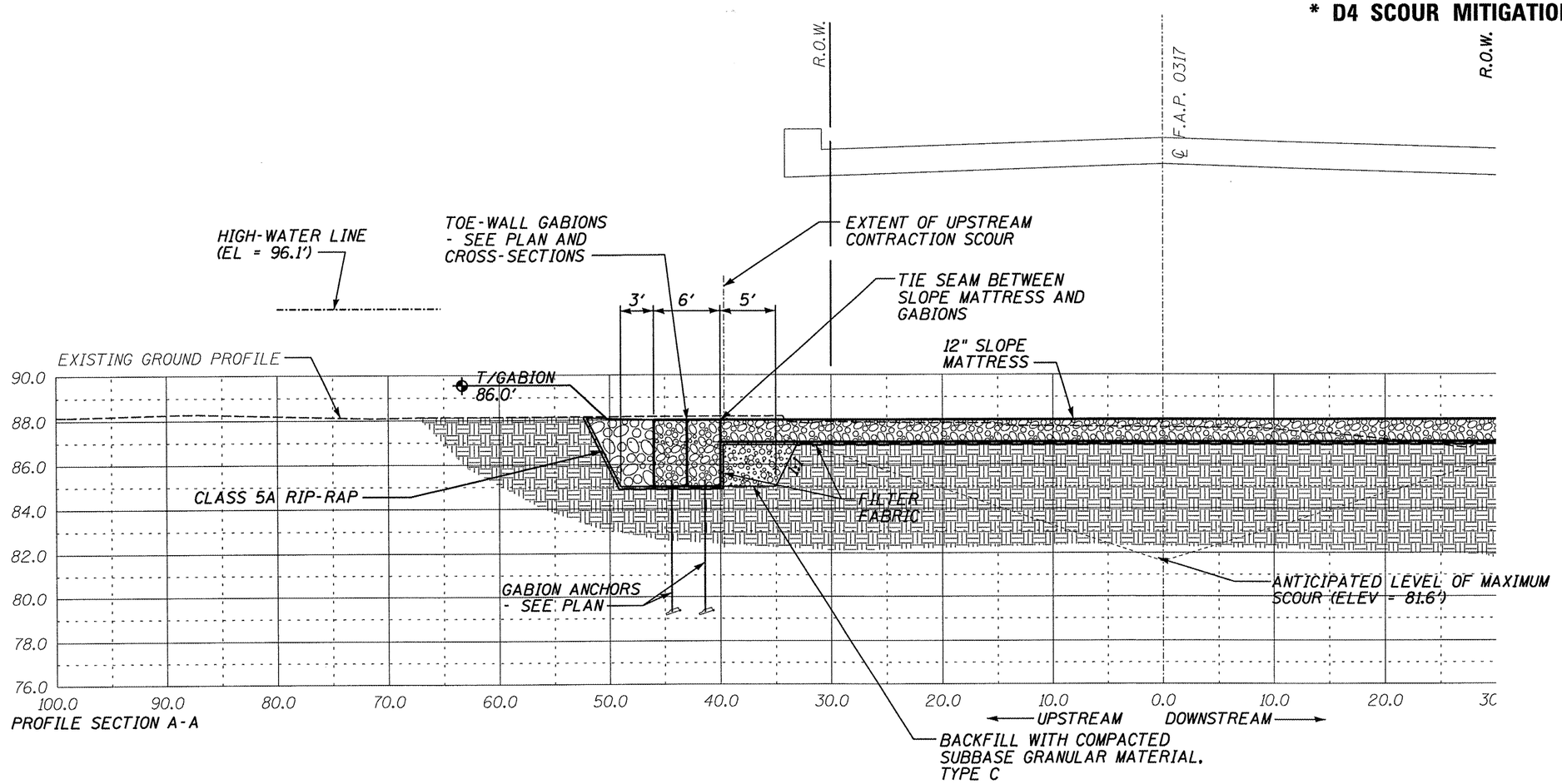

PROFILE SECTION A-A

CALCULATED OPENING: 16'

MAXIMUM SCOUR CALCULATION:
CONTRACTION SCOUR EQUATION = 7 FT

ILLINOIS DEPARTMENT OF TRANSPORTATION
SITE PROFILE
S.N. 029-0002
F.A.P. 0317 (U.S. RTE. 24)
OVER DRY RUN CREEK
FULTON COUNTY
SHEET 5 OF 11

SCALE: VERT. 1" = 5' HORIZ. 1" = 10'

MAURER ▲ STUTZ, INC.
ENGINEERS SURVEYORS

ROUTE NO.	SECTION	COUNTY	TOTAL SHEETS	SHEET NO.
VAR	*	VAR	66	10
FED. ROAD DIST. NO. 4		ILLINOIS	FED. AID PROJECT	

*** D4 SCOUR MITIGATION 2006**

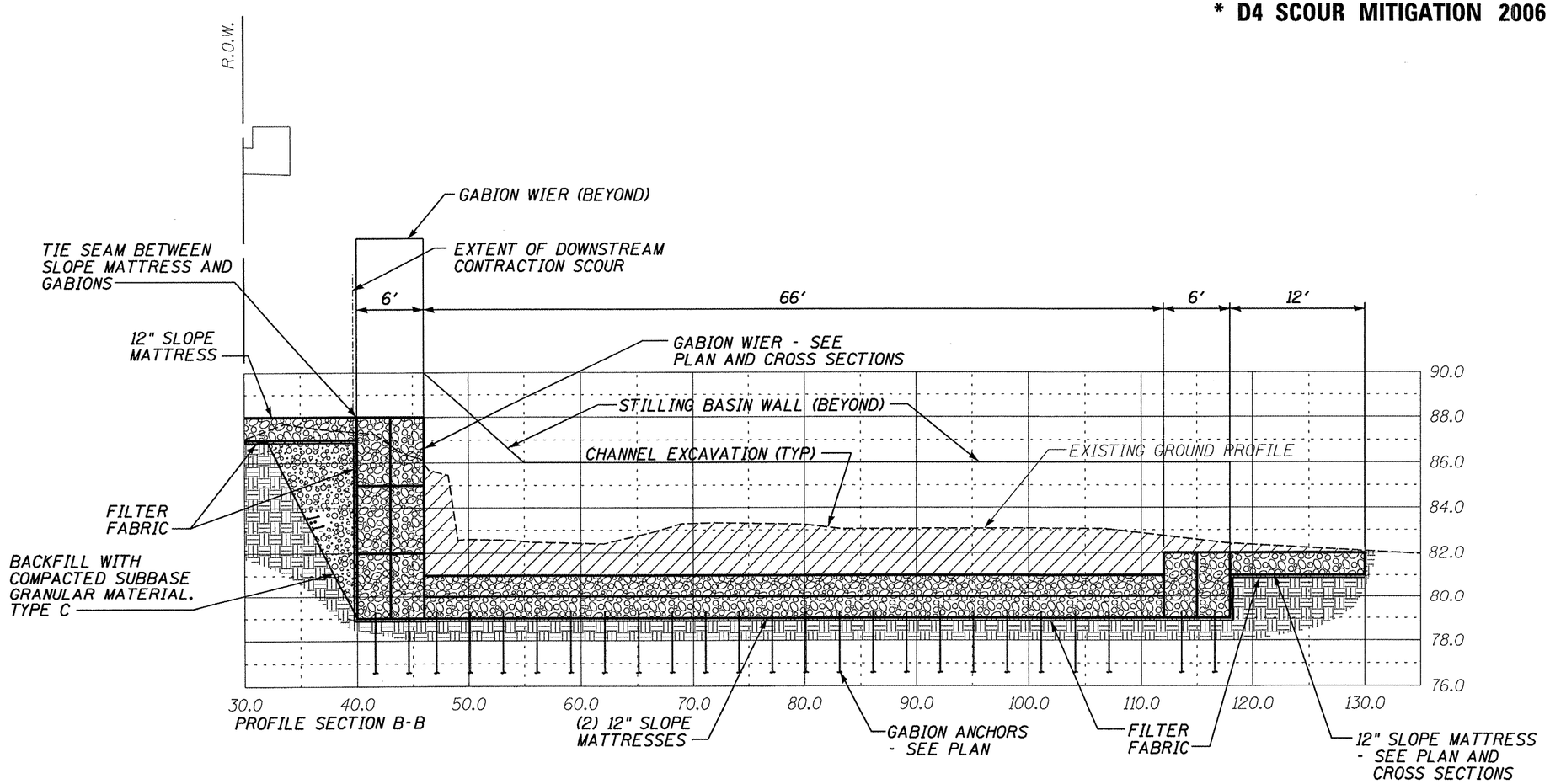

CALCULATED OPENING: 16'

MAXIMUM SCOUR CALCULATION:
CONTRACTION SCOUR EQUATION = 7 FT

ILLINOIS DEPARTMENT OF TRANSPORTATION

SITE PROFILE
S.N. 029-0002
F.A.P. 0317 (U.S. RTE. 24)
OVER DRY RUN CREEK
FULTON COUNTY
SHEET 6 OF 11

SCALE: VERT. 1" = 5' HORIZ. 1" = 10'

MAURER STUTZ, INC.
ENGINEERS SURVEYORS

ROUTE NO.	SECTION	COUNTY	TOTAL SHEETS	SHEET NO.
VAR	*	VAR	66	11
FED. ROAD DIST. NO. 4		ILLINOIS	FED. AID PROJECT	

*** D4 SCOUR MITIGATION 2006**

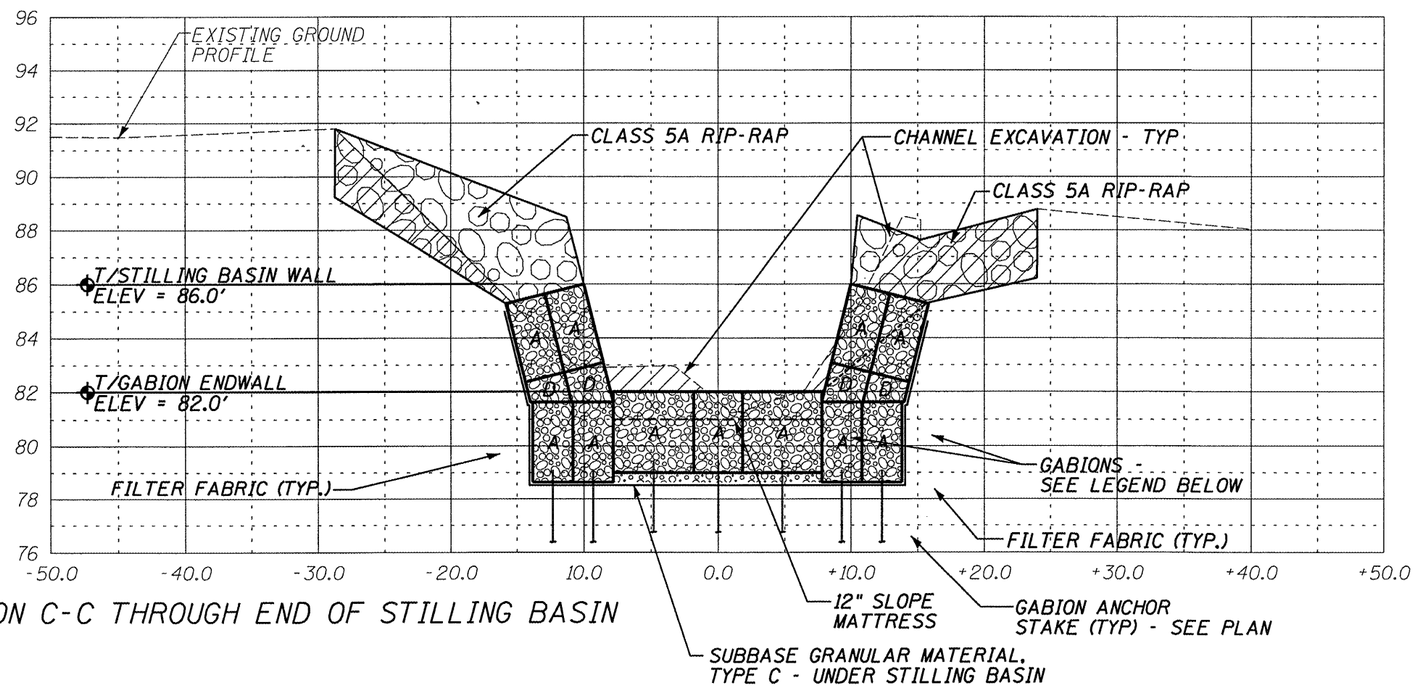

SECTION C-C THROUGH END OF STILLING BASIN

GABION LEGEND			
MARK	LENGTH	WIDTH	HEIGHT
A	6'	3'	3'
D	6'	3'	1½'

ILLINOIS DEPARTMENT OF TRANSPORTATION
SITE CROSS SECTION
S.N. 029-0002
F.A.P. 0317 (U.S. RTE 24)
OVER DRY RUN CREEK
FULTON COUNTY
SHEET 7 OF 11

SCALE: VERT. 1" = 5' HORIZ. 1" = 10'

MAURER ▲ STUTZ, INC.
ENGINEERS SURVEYORS

ROUTE NO.	SECTION	COUNTY	TOTAL SHEETS	SHEET NO.
VAR	*	VAR	66	12
FED. ROAD DIST. NO. 4		ILLINOIS	FED. AID PROJECT	

*** D4 SCOUR MITIGATION 2006**

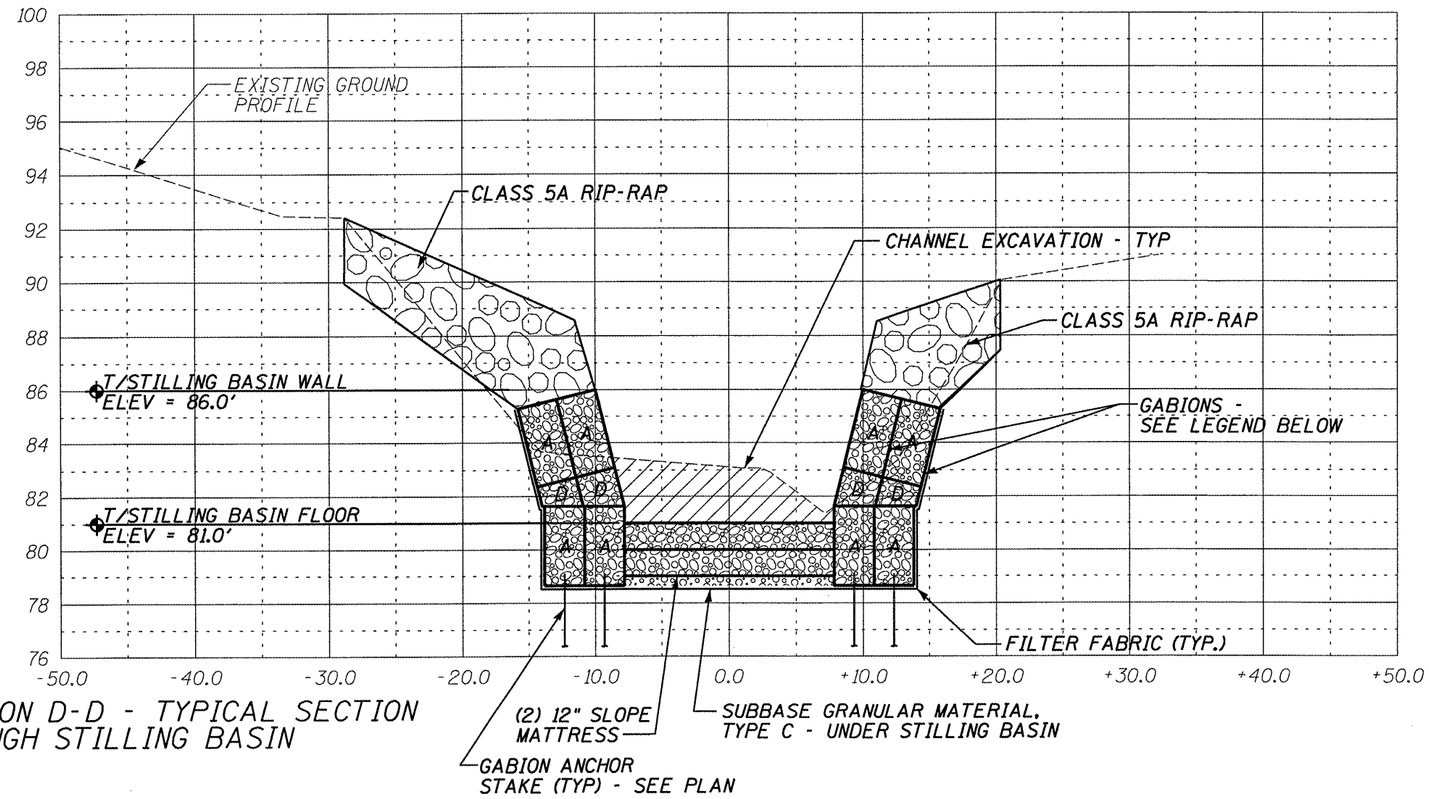

SECTION D-D - TYPICAL SECTION THROUGH STILLING BASIN

GABION LEGEND			
MARK	LENGTH	WIDTH	HEIGHT
A	6'	3'	3'
D	6'	3'	1½'

ILLINOIS DEPARTMENT OF TRANSPORTATION
SITE CROSS SECTION
S.N. 029-0002
F.A.P. 0317 (U.S. RTE. 24)
OVER DRY RUN CREEK
FULTON COUNTY
SHEET 8 OF 11

SCALE: VERT. 1" = 5' HORIZ. 1" = 10'

MAURER & STUTZ, INC.
ENGINEERS SURVEYORS

ROUTE NO.	SECTION	COUNTY	TOTAL SHEETS	SHEET NO.
VAR	*	VAR	66	13
FED. ROAD DIST. NO. 4		ILLINOIS	FED. AID PROJECT	

*** D4 SCOUR MITIGATION 2006**

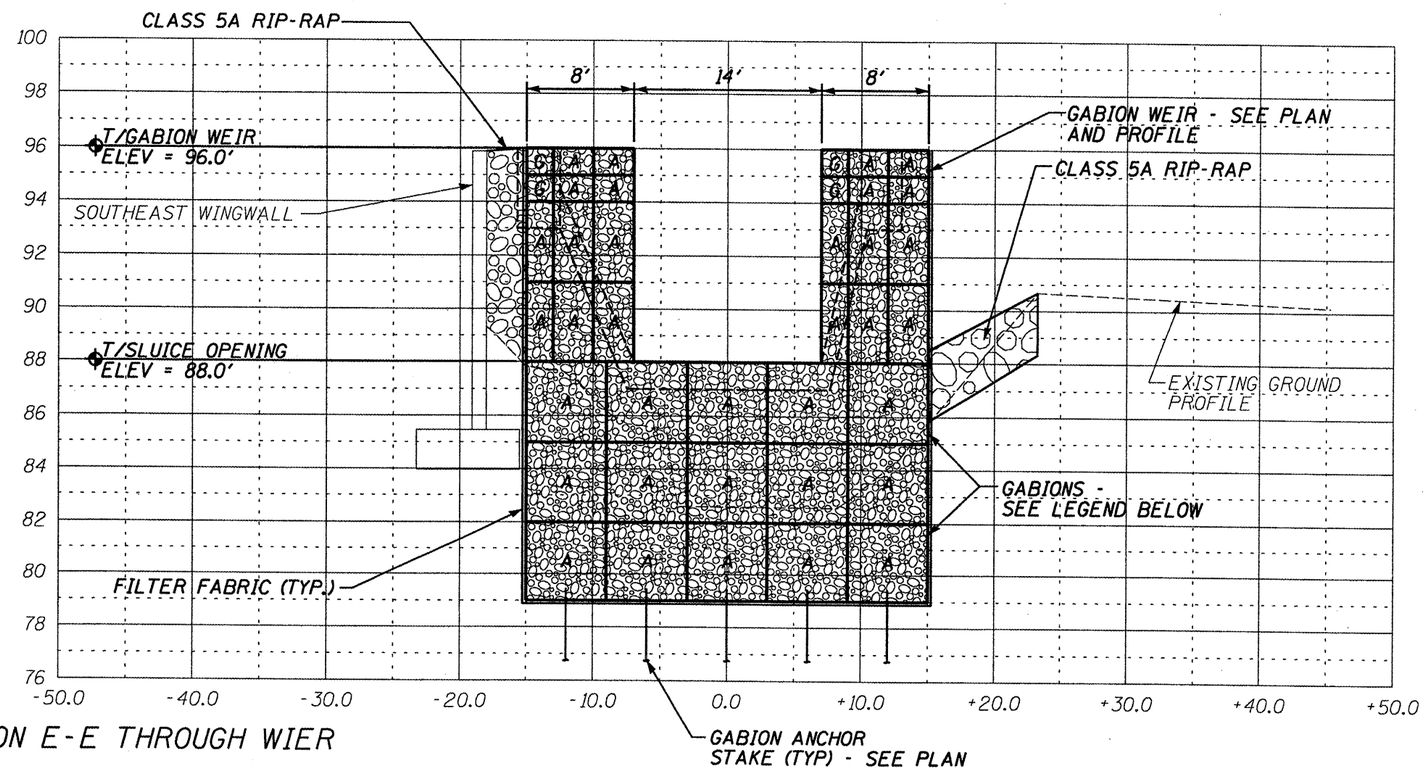

SECTION E-E THROUGH WIER

GABION LEGEND			
MARK	LENGTH	WIDTH	HEIGHT
A	6'	3'	3'
G	6'	3'	1'

ILLINOIS DEPARTMENT OF TRANSPORTATION
SITE CROSS SECTION
S.N. 029-0002
F.A.P. 0317 (U.S. RTE. 24)
OVER DRY RUN CREEK
FULTON COUNTY
SHEET 9 OF 11

SCALE: VERT. 1" = 5' HORIZ. 1" = 10'

MAURER & STUTZ, INC.
ENGINEERS SURVEYORS

ROUTE NO.	SECTION	COUNTY	TOTAL SHEETS	SHEET NO.
VAR	*	VAR	66	14
FED. ROAD DIST. NO. 4	ILLINOIS	FED. AID PROJECT		

*** D4 SCOUR MITIGATION 2006**

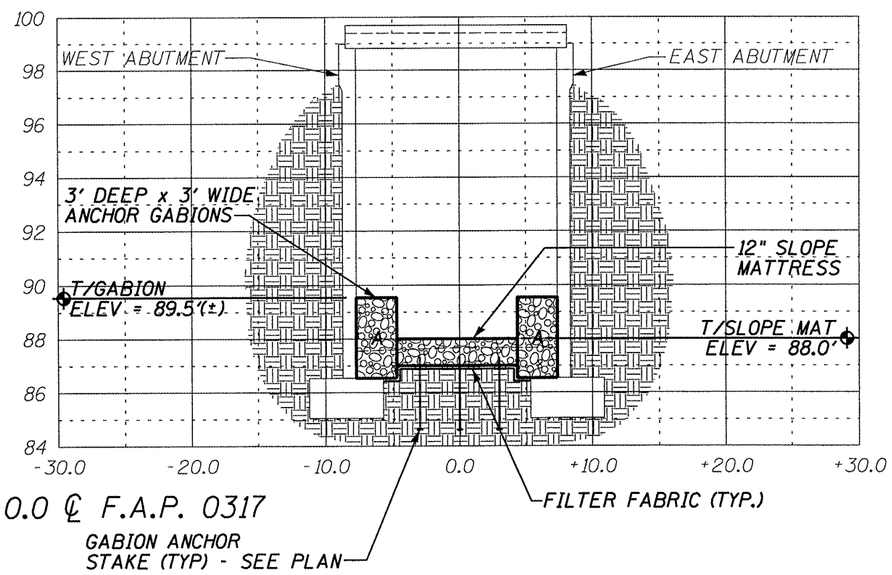

SECTION F-F - STA 0+0.0 ℄ F.A.P. 0317

GABION LEGEND			
MARK	LENGTH	WIDTH	HEIGHT
A	6'	3'	3'

ILLINOIS DEPARTMENT OF TRANSPORTATION

SITE CROSS SECTION
S.N. 029-0002
F.A.P. 0317 (U.S. RTE. 24)
OVER DRY RUN CREEK
FULTON COUNTY
SHEET 10 OF 11

SCALE: VERT. 1" = 5' HORIZ. 1" = 10'

MAURER STUTZ, INC.
ENGINEERS SURVEYORS

ROUTE NO.	SECTION	COUNTY	TOTAL SHEETS	SHEET NO.
VAR	*	VAR	66	15
FED. ROAD DIST. NO. 4		ILLINOIS	FED. AID PROJECT	

*** D4 SCOUR MITIGATION 2006**

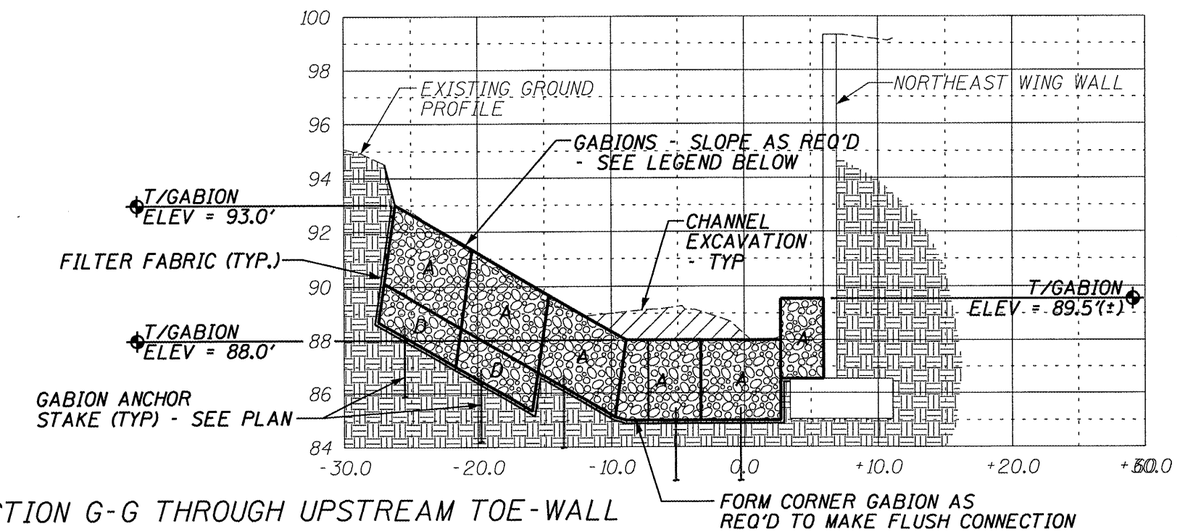

SECTION G-G THROUGH UPSTREAM TOE-WALL

GABION LEGEND			
MARK	LENGTH	WIDTH	HEIGHT
A	6'	3'	3'
D	6'	3'	1½'

ILLINOIS DEPARTMENT OF TRANSPORTATION
SITE CROSS SECTION
S.N. 029-0002
F.A.P. 0317 (U.S. RTE. 24)
OVER DRY RUN CREEK
FULTON COUNTY
SHEET 11 OF 11

SCALE: VERT. 1" = 5' HORIZ. 1" = 10'

MAURER & STUTZ, INC.
ENGINEERS SURVEYORS

BENCHMARK: BRASS U.S.G.S. TOP OF SE WINGWALL
ELEV. = 503.92

EXISTING STRUCTURE: SN 029-0027 IS A 40'-6" WIDE x 99'-4" LONG R.C. SLAB ON STRUCTURAL STEEL BEAM SUPERSTRUCTURE. WITH R.C. CLOSED ABUTMENTS.

ROUTE NO.	SECTION	COUNTY	TOTAL SHEETS	SHEET NO.
VAR	*	VAR	66	16
FED. ROAD DIST. NO. 4		ILLINOIS	FED. AID PROJECT	

* D4 SCOUR MITIGATION 2006

INDEX OF SHEETS

SHEET NUMBER	DESCRIPTION
1	GENERAL PLAN AND PROFILE, SUMMARY OF QUANTITIES, LOCATION MAP
2	R.O.W. PLAN
3	PROPOSED SITE PLAN
4	PROPOSED DIMENSION PLAN
5	SITE PROFILE
6-8	CROSS SECTIONS

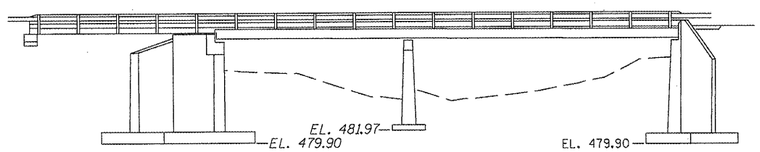

ELEVATION

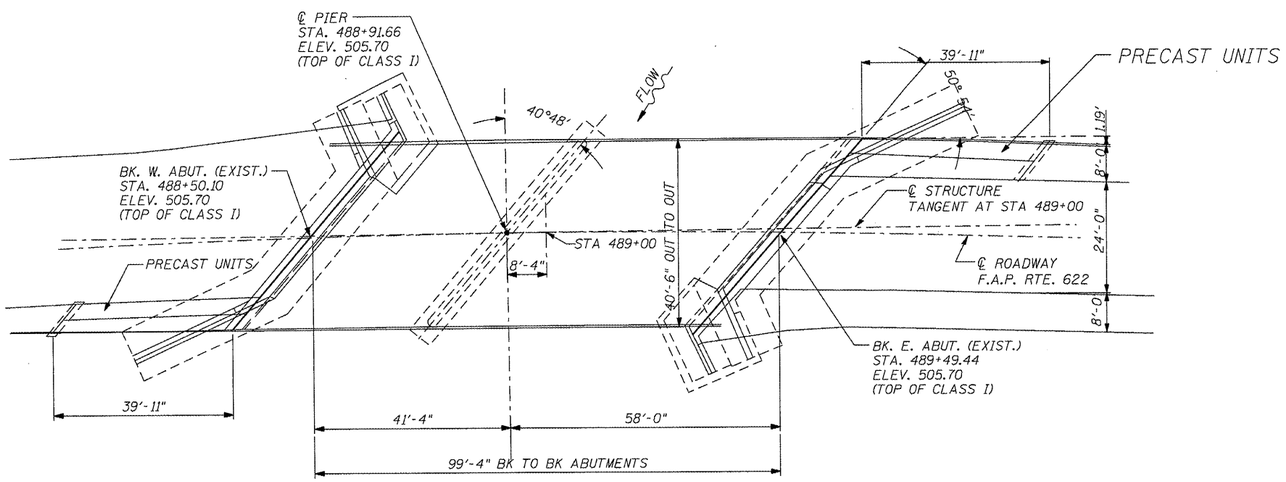

PLAN

EXISTING BRIDGE

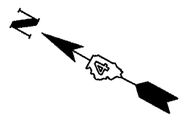

DAVID L. MAURER 062-030577 LICENSED PROFESSIONAL ENGINEER OF ILLINOIS

David L. Maurer, P.E.
Exp. Date 11/2009
P.E. No.: 062-030577

BILL OF MATERIALS

ITEM	UNIT	TOTAL
TREE REMOVAL (6-15 UNITS)	UNIT	22
CHANNEL EXCAVATION	CU YD	1056
PERIMETER EROSION CONTROL	FOOT	25
STONE RIP-RAP, CLASS A5	TONS	159
FILTER FABRIC	SQ YD	1242
GABIONS	CU YD	337
SLOPE MATTRESS 12"	SQ YD	624
SUB-BASE GRANULAR MATERIAL, TYPE C	TONS	590
GABION ANCHOR STAKE	EACH	102
DEWATERING STRUCTURE NO. 2	EACH	1

TREE REMOVAL

STA	OFFSET	UNITS
489+03	40' L	8
489+03	40' L	10
489+03	40' L	4
TOTAL		22

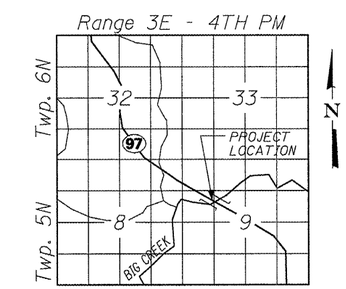

LOCATION SKETCH

WATERWAY/SCOUR INFORMATION

DESIGN FLOOD	100 YRS
DRAINAGE AREA	53.1 SQ MI
FLOW	6,672 CFS
FLOW DEPTH	14.3 FT
REQUIRED FLOW AREA	800 SQ FT
PROVIDED FLOW AREA	946 SQ FT
CONTRACTION SCOUR DEPTH	15 FT

ILLINOIS DEPARTMENT OF TRANSPORTATION
GENERAL PLAN & ELEVATION
S.N. 029-0027
F.A.P. 622 (IL. RTE. 97)
OVER BIG CREEK
FULTON COUNTY

SHEET 1 OF 8

MAURER & STUTZ, INC.
ENGINEERS SURVEYORS

ROUTE NO.	SECTION	COUNTY	TOTAL SHEETS	SHEET NO.
VAR	*	VAR	66	17
FED. ROAD DIST. NO. 4		ILLINOIS	FED. AID PROJECT	

*** D4 SCOUR MITIGATION 2006**

LEGEND

- EXIST. R.O.W. LINE
- TEMPORARY EASEMENT
- CONST. LIMITS
- CONCRETE ABUTMENT
- STREAM CENTERLINE
- GABION
- SLOPE MATTRESS
- AERIAL TELEPHONE — AT —
- TELEPHONE POLE

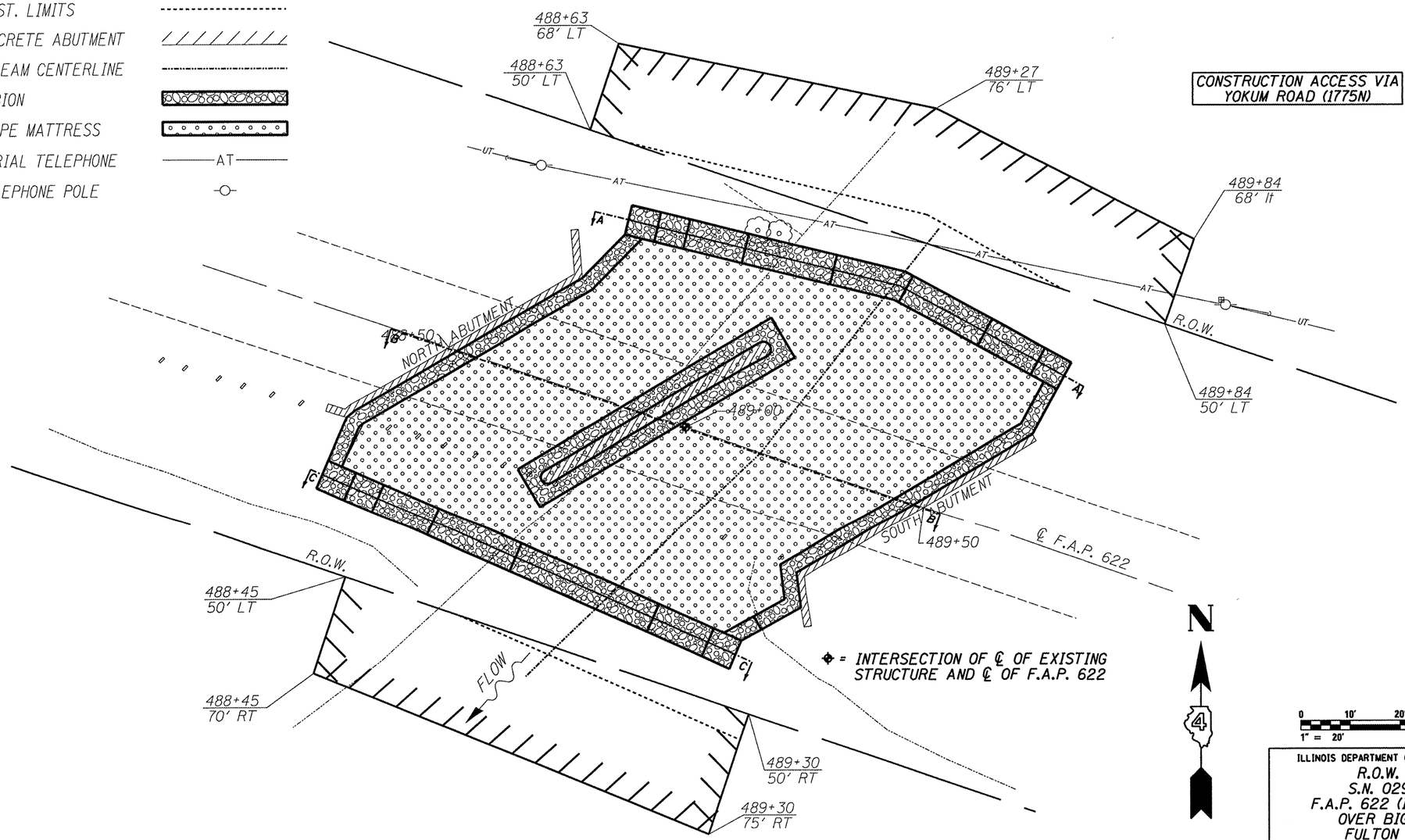

ILLINOIS DEPARTMENT OF TRANSPORTATION

R.O.W. PLAN
S.N. 029-0027
F.A.P. 622 (IL. RTE. 97)
OVER BIG CREEK
FULTON COUNTY
SHEET 2 OF 8

SCALE: 1" = 20'

MAURER & STUTZ, INC.
ENGINEERS SURVEYORS

ROUTE NO.	SECTION	COUNTY	TOTAL SHEETS	SHEET NO.
VAR	*	VAR	66	18
FED. ROAD DIST. NO. 4		ILLINOIS	FED. AID PROJECT	

* D4 SCOUR MITIGATION 2006

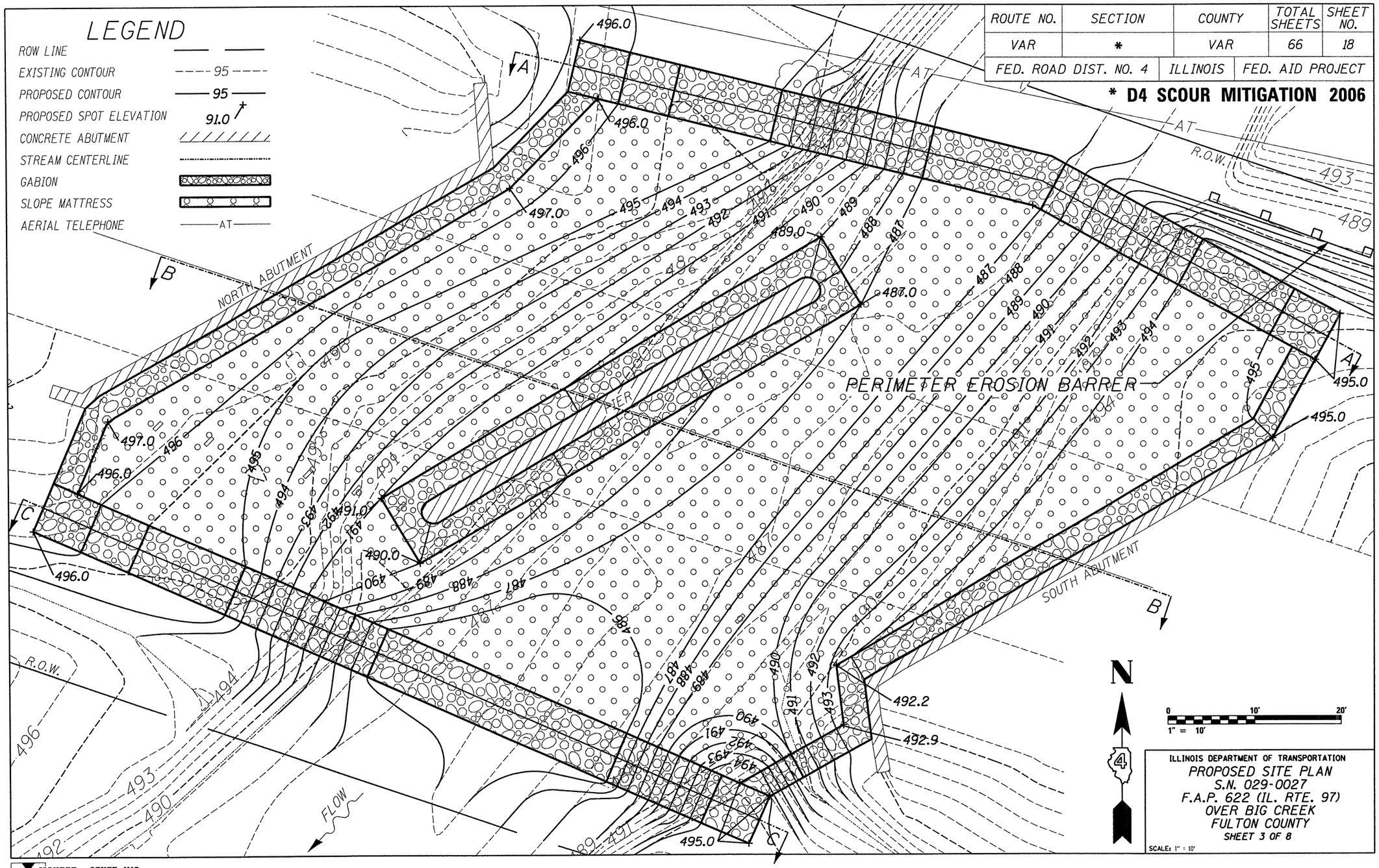

MAURER STUTZ, INC.
ENGINEERS SURVEYORS

ROUTE NO.	SECTION	COUNTY	TOTAL SHEETS	SHEET NO.
VAR	*	VAR	66	19
FED. ROAD DIST. NO. 4		ILLINOIS	FED. AID PROJECT	

*** D4 SCOUR MITIGATION 2006**

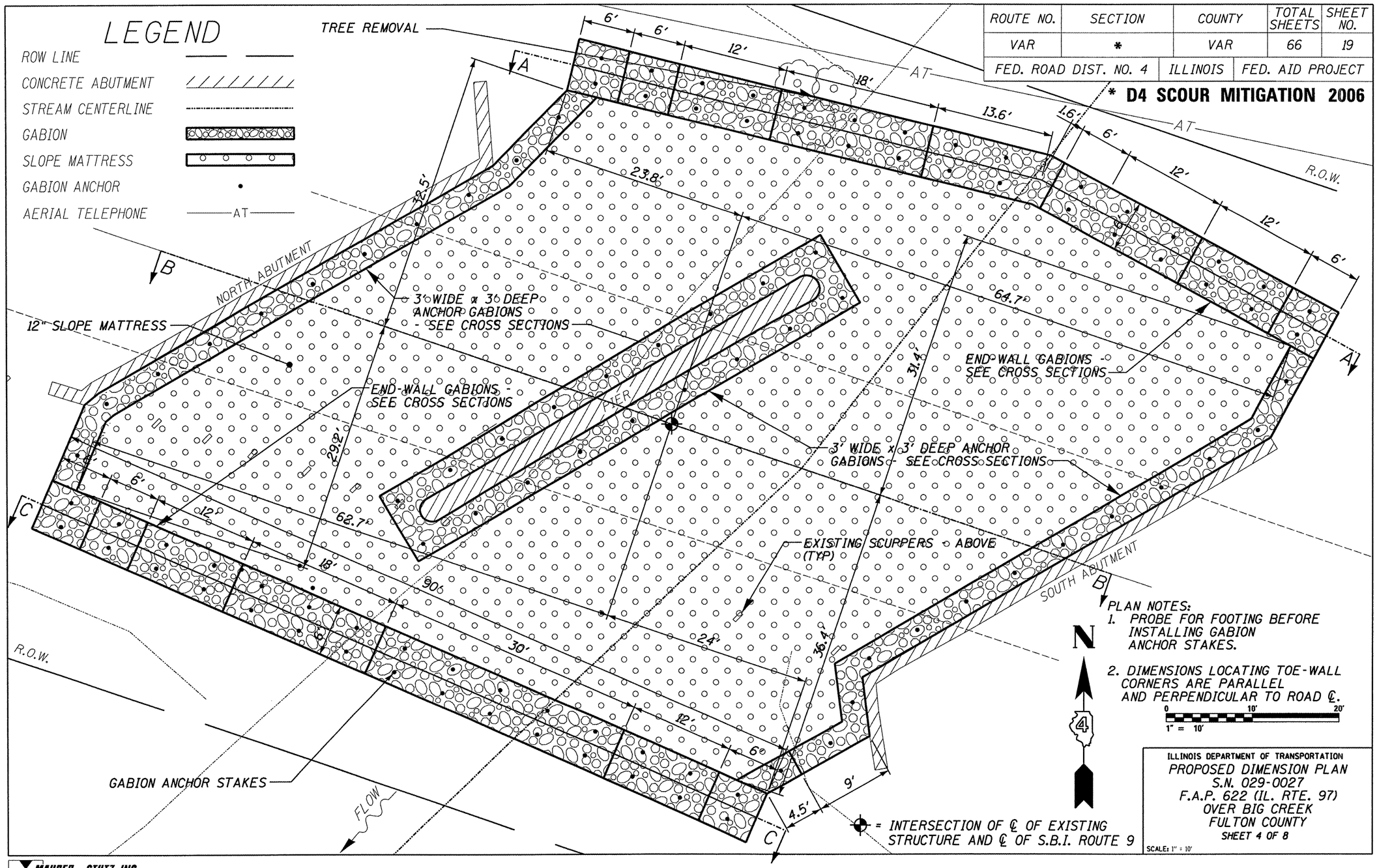

PLAN NOTES:

1. PROBE FOR FOOTING BEFORE INSTALLING GABION ANCHOR STAKES.
2. DIMENSIONS LOCATING TOE-WALL CORNERS ARE PARALLEL AND PERPENDICULAR TO ROAD ℄.

ILLINOIS DEPARTMENT OF TRANSPORTATION

PROPOSED DIMENSION PLAN
S.N. 029-0027
F.A.P. 622 (IL. RTE. 97)
OVER BIG CREEK
FULTON COUNTY
SHEET 4 OF 8

SCALE: 1" = 10'

MAURER ▲ STUTZ, INC.
ENGINEERS SURVEYORS

ROUTE NO.	SECTION	COUNTY	TOTAL SHEETS	SHEET NO.
VAR	*	VAR	66	20
FED. ROAD DIST. NO. 4		ILLINOIS	FED. AID PROJECT	

*** D4 SCOUR MITIGATION 2006**

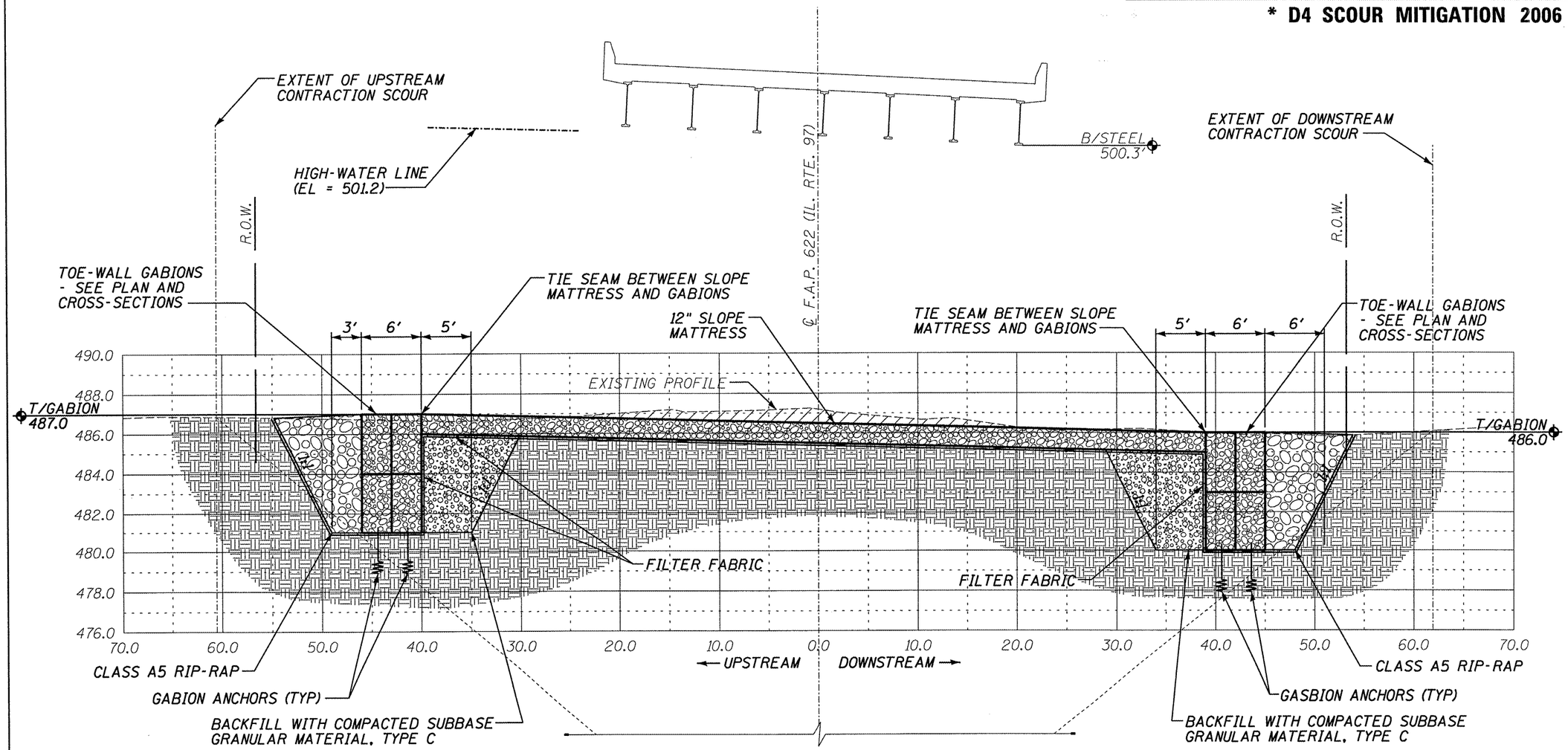

CALCULATED OPENING: 39'

MAXIMUM SCOUR CALCULATION:

CONTRACTION SCOUR EQUATION	= 17 FT
LOCAL SCOUR EQUATION	= 11 FT
ADJUSTMENT FACTOR FOR TOTAL STREAMBED ARMORING	= 0.7
TOTAL LOCAL SCOUR	= 7.7 FT
TOTAL COMBINED SCOUR	= 24.7 FT

ILLINOIS DEPARTMENT OF TRANSPORTATION

SITE PROFILE
S.N. 029-0027
F.A.P. 622 (IL. RTE. 97)
OVER BIG CREEK
FULTON COUNTY

SHEET 5 OF 8

SCALE: HORIZ. 1" = 10' VERT. 1" = 5'

MAURER & STUTZ, INC.
ENGINEERS SURVEYORS

ROUTE NO.	SECTION	COUNTY	TOTAL SHEETS	SHEET NO.
VAR	*	VAR	66	21
FED. ROAD DIST. NO. 4		ILLINOIS	FED. AID PROJECT	

*** D4 SCOUR MITIGATION 2006**

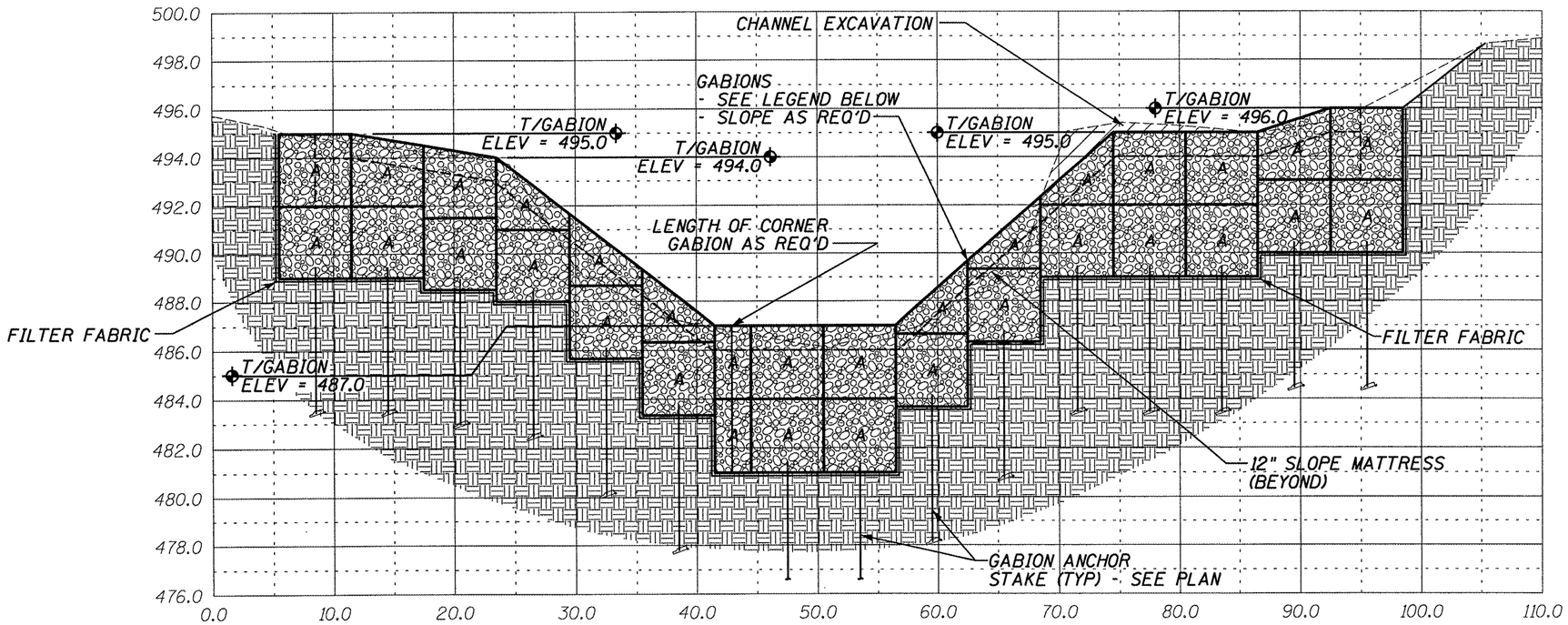

SECTION A-A THROUGH NORTH GABION TOE-WALL

GABION LEGEND			
MARK	LENGTH	WIDTH	HEIGHT
A	6'	3'	3'

ILLINOIS DEPARTMENT OF TRANSPORTATION
SITE CROSS SECTION
S.N. 029-0027
F.A.P. 622 (IL. RTE. 97)
OVER BIG CREEK
FULTON COUNTY
SHEET 6 OF 8
SCALE: HORIZ. 1" = 10' VERT. 1" = 5'

MAURER STUTZ, INC.
ENGINEERS SURVEYORS

ROUTE NO.	SECTION	COUNTY	TOTAL SHEETS	SHEET NO.
VAR	*	VAR	66	22
FED. ROAD DIST. NO. 4		ILLINOIS	FED. AID PROJECT	

*** D4 SCOUR MITIGATION 2006**

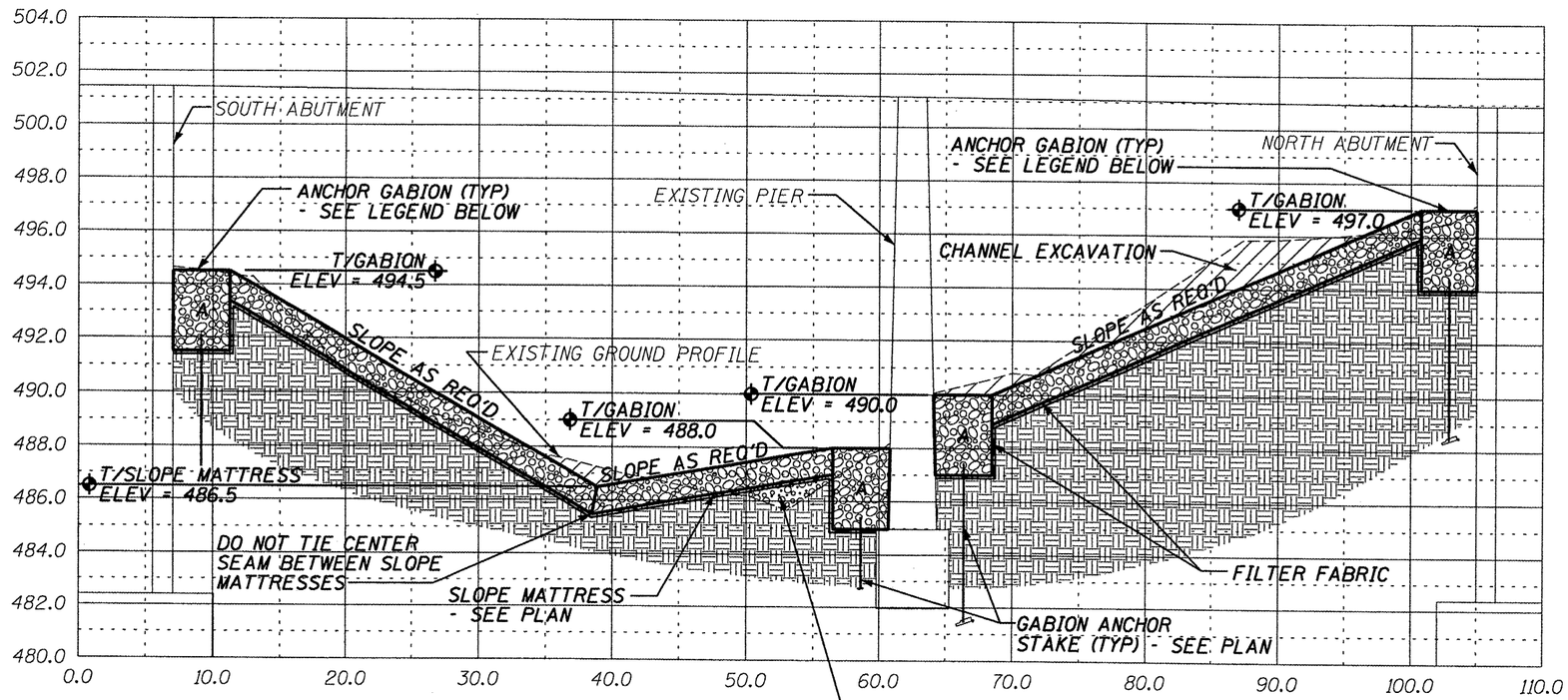

SECTION B-B THROUGH ℄ F.A. RTE. 622

GABION LEGEND			
MARK	LENGTH	WIDTH	HEIGHT
A	6'	3'	3'

ILLINOIS DEPARTMENT OF TRANSPORTATION
SITE CROSS SECTION
S.N. 029-0027
F.A.P. 622 (IL. RTE. 97)
OVER BIG CREEK
FULTON COUNTY
SHEET 7 OF 8
SCALE: HORIZ. 1" = 10' VERT. 1" = 5'

MAURER & STUTZ, INC.
ENGINEERS SURVEYORS

ROUTE NO.	SECTION	COUNTY	TOTAL SHEETS	SHEET NO.
VAR	*	VAR	66	23
FED. ROAD DIST. NO. 4		ILLINOIS	FED. AID PROJECT	

*** D4 SCOUR MITIGATION 2006**

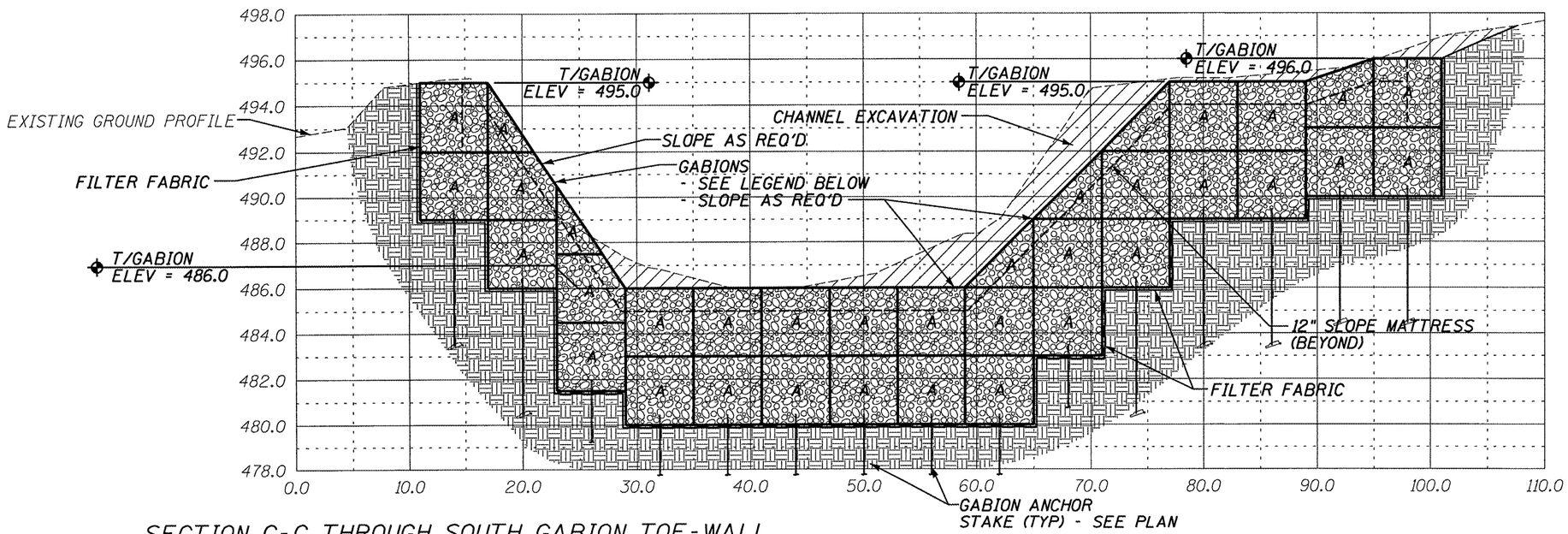

SECTION C-C THROUGH SOUTH GABION TOE-WALL

GABION LEGEND			
MARK	LENGTH	WIDTH	HEIGHT
A	6'	3'	3'

ILLINOIS DEPARTMENT OF TRANSPORTATION
SITE CROSS SECTION
S.N. 029-0027
F.A.P. 622 (IL. RTE. 97)
OVER BIG CREEK
FULTON COUNTY
SHEET 8 OF 8
SCALE: HORIZ. 1" = 10' VERT. 1" = 5'

MAURER STUTZ, INC.
ENGINEERS SURVEYORS

BENCHMARK: BLACK MARKED SQUARE ON SE WINGWALL
ELEV. = 100.00

EXISTING STRUCTURE: SN 029-0053 IS A 38'-0" WIDE x 186'-7" LONG R.C. DECK WITH WELDED PLATE GIRDER SUPERSTRUCTURE WITH R.C. CLOSED ABUTMENTS.

ROUTE NO.	SECTION	COUNTY	TOTAL SHEETS	SHEET NO.
VAR	*	VAR	66	24
FED. ROAD DIST. NO. 4	ILLINOIS	FED. AID PROJECT		

* D4 SCOUR MITIGATION 2006

INDEX OF SHEETS

SHEET NUMBER	DESCRIPTION
1	GENERAL PLAN AND PROFILE, SUMMARY OF QUANTITIES, LOCATION MAP
2	R.O.W. PLAN
3	PROPOSED SITE PLAN
4	PROPOSED DIMENSION PLAN
5-6	SITE PROFILE
7-11	CROSS SECTIONS

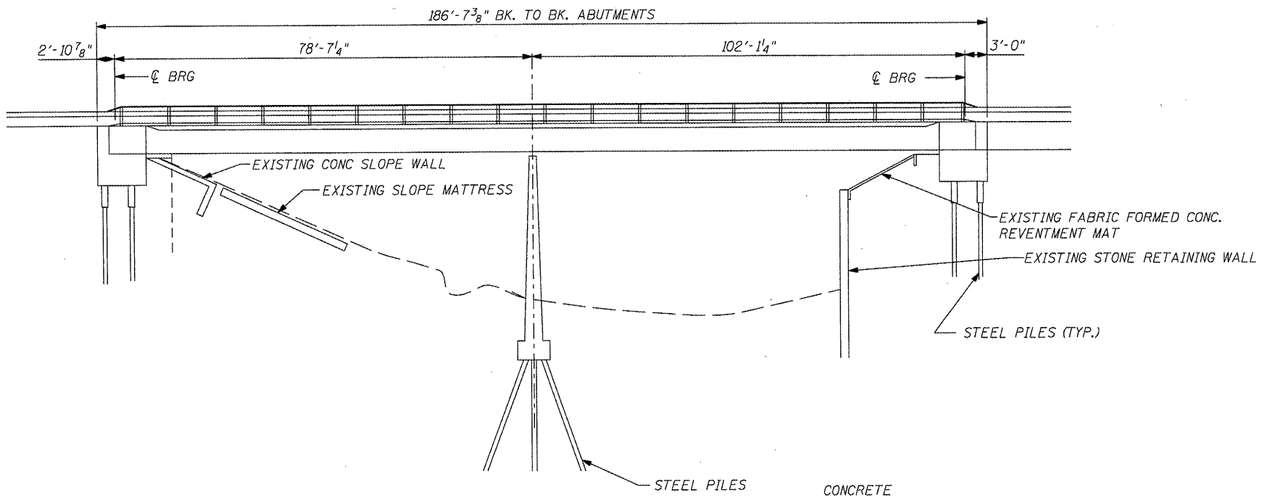

ELEVATION

BILL OF MATERIALS		
ITEM	UNIT	TOTAL
CHANNEL EXCAVATION	CU YD	1657
STONE RIP-RAP, CLASS A5	TONS	718
FILTER FABRIC	SQ YD	2902
GABIONS	CU YD	450
SLOPE MATTRESS 12"	SQ YD	2175
SUB-BASE GRANULAR MATERIAL, TYPE C	TONS	869
REMOVE EXISTING STRUCTURE	EACH	2
GABION ANCHOR STAKES	EACH	148
DEWATERING STRUCTURE NO. 3	EACH	1

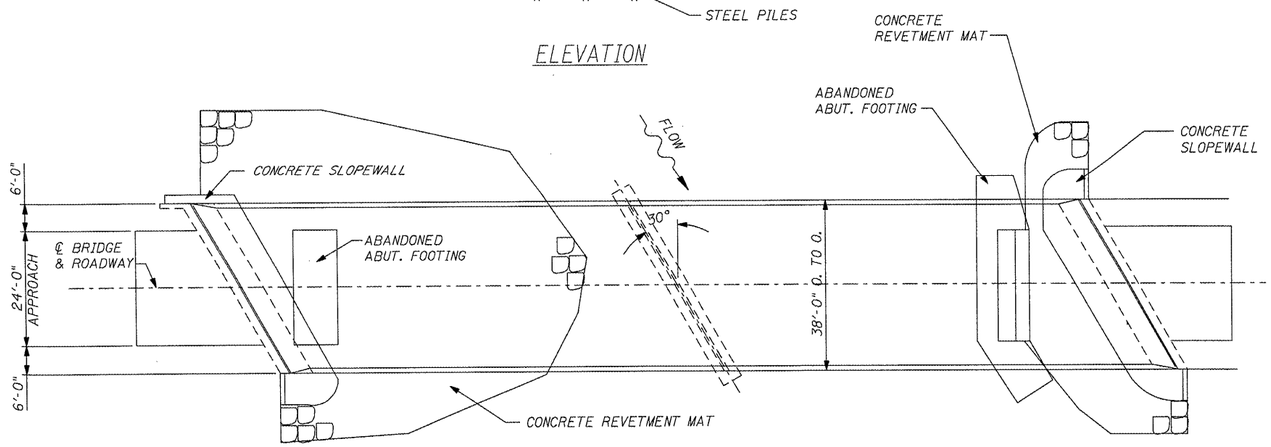

PLAN

EXISTING BRIDGE

DAVID L. MAURER 062-030577 LICENSED PROFESSIONAL ENGINEER OF ILLINOIS

David L. Maurer, P.E.
Exp. Date 11/2009
P.E. No.: 062-030577

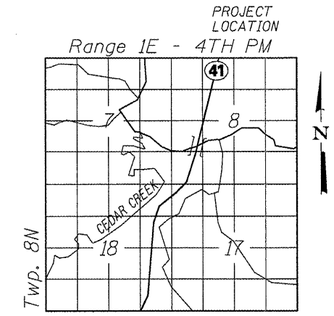

LOCATION SKETCH

WATERWAY/SCOUR INFORMATION

DESIGN FLOOD	100 YRS
DRAINAGE AREA	252.6 SQ MI
FLOW	17,240 CFS
FLOW DEPTH	22.32 FT
OPENING REQUIRED	1870 SQ FT
OPENING PROVIDED	2382 SQ FT
CONTRACTION SCOUR DEPTH	32 FT

ILLINOIS DEPARTMENT OF TRANSPORTATION

GENERAL PLAN & ELEVATION
S.N. 029-0053
F.A.P. 574 (IL. RTE. 41)
OVER CEDAR CREEK
FULTON COUNTY
SHEET 1 OF 11

MAURER & STUTZ, INC.
ENGINEERS SURVEYORS

ROUTE NO.	SECTION	COUNTY	TOTAL SHEETS	SHEET NO.
VAR	*	VAR	66	25
FED. ROAD DIST. NO. 4		ILLINOIS	FED. AID PROJECT	

* D4 SCOUR MITIGATION 2006

LEGEND

- R.O.W.
- PROPOSED R.O.W. LINE
- CONSTRUCTION LIMITS
- CONCRETE ABUTMENT
- STREAM CENTERLINE
- EXISTING REVETMENT
- GABION
- PROP SLOPE MATTRESS
- AERIAL ELECTRIC — AE —
- ELECTRIC POLE
- UNDERGROUND GAS LINE — G —
- EXISTING FENCE

INDICATES CENTER OF STRUCTURE AT ℄ OF ROADWAY

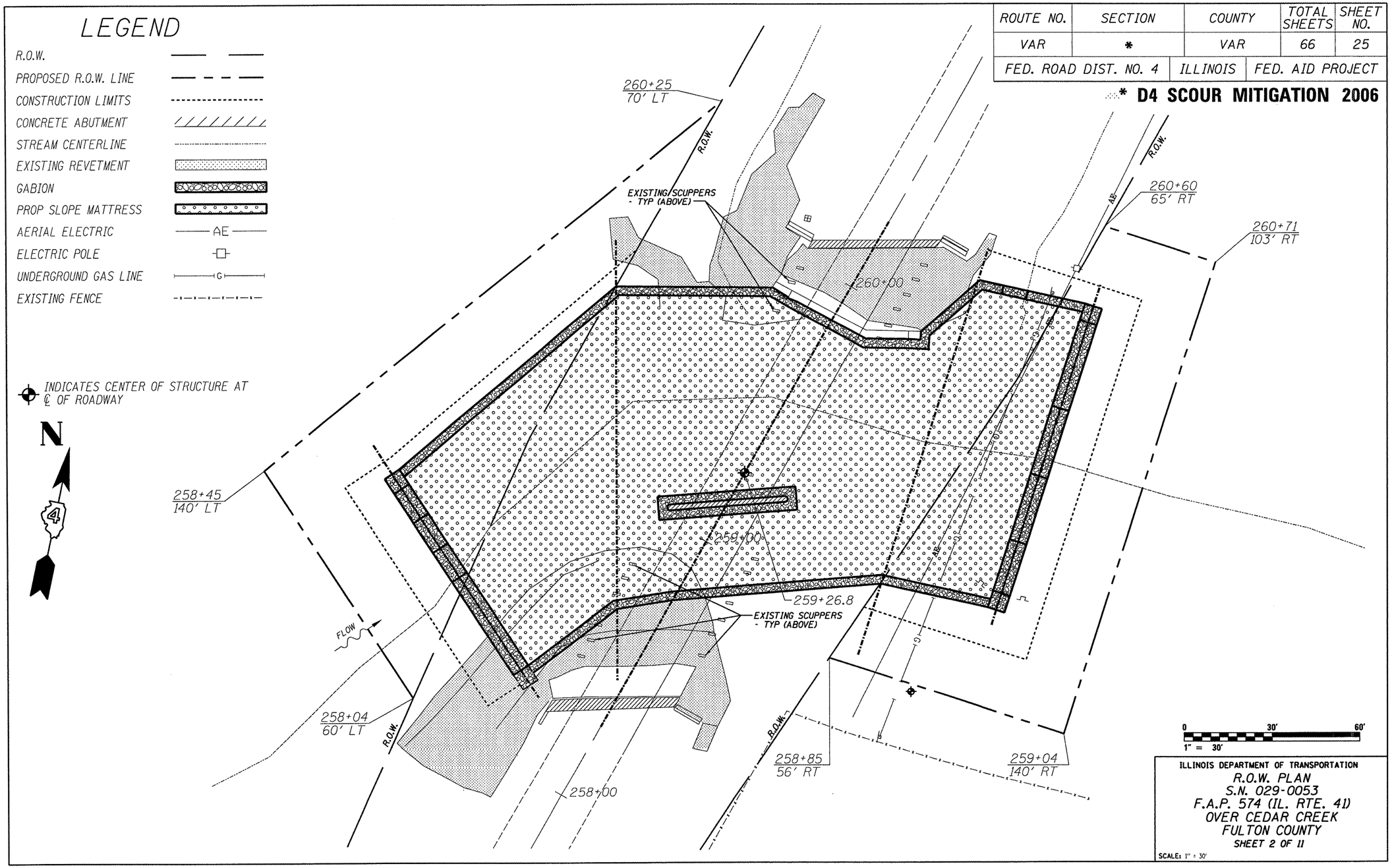

ILLINOIS DEPARTMENT OF TRANSPORTATION
R.O.W. PLAN
S.N. 029-0053
F.A.P. 574 (IL. RTE. 41)
OVER CEDAR CREEK
FULTON COUNTY
SHEET 2 OF 11

SCALE: 1" = 30'

MAURER & STUTZ, INC.
ENGINEERS SURVEYORS

ROUTE NO.	SECTION	COUNTY	TOTAL SHEETS	SHEET NO.
VAR	*	VAR	66	26
FED. ROAD DIST. NO. 4		ILLINOIS	FED. AID PROJECT	

* D4 SCOUR MITIGATION 2006

LEGEND

- R.O.W.
- EXISTING CONTOUR — 95 —
- PROPOSED CONTOUR — 95 —
- PROPOSED SPOT ELEVATION 95.0
- CONCRETE ABUTMENT
- STREAM CENTERLINE
- EXISTING REVETMENT
- GABION
- PROP SLOPE MATTRESS
- AERIAL ELECTRIC — AE —
- UNDERGROUND GAS LINE — G —
- EXISTING FENCE — x — x — x — x —

NOTE: SPOT ELEVATIONS SURROUNDED BY PARENTHESES INDICATE TOP OF GABIONS BURIED BY BACKFILL

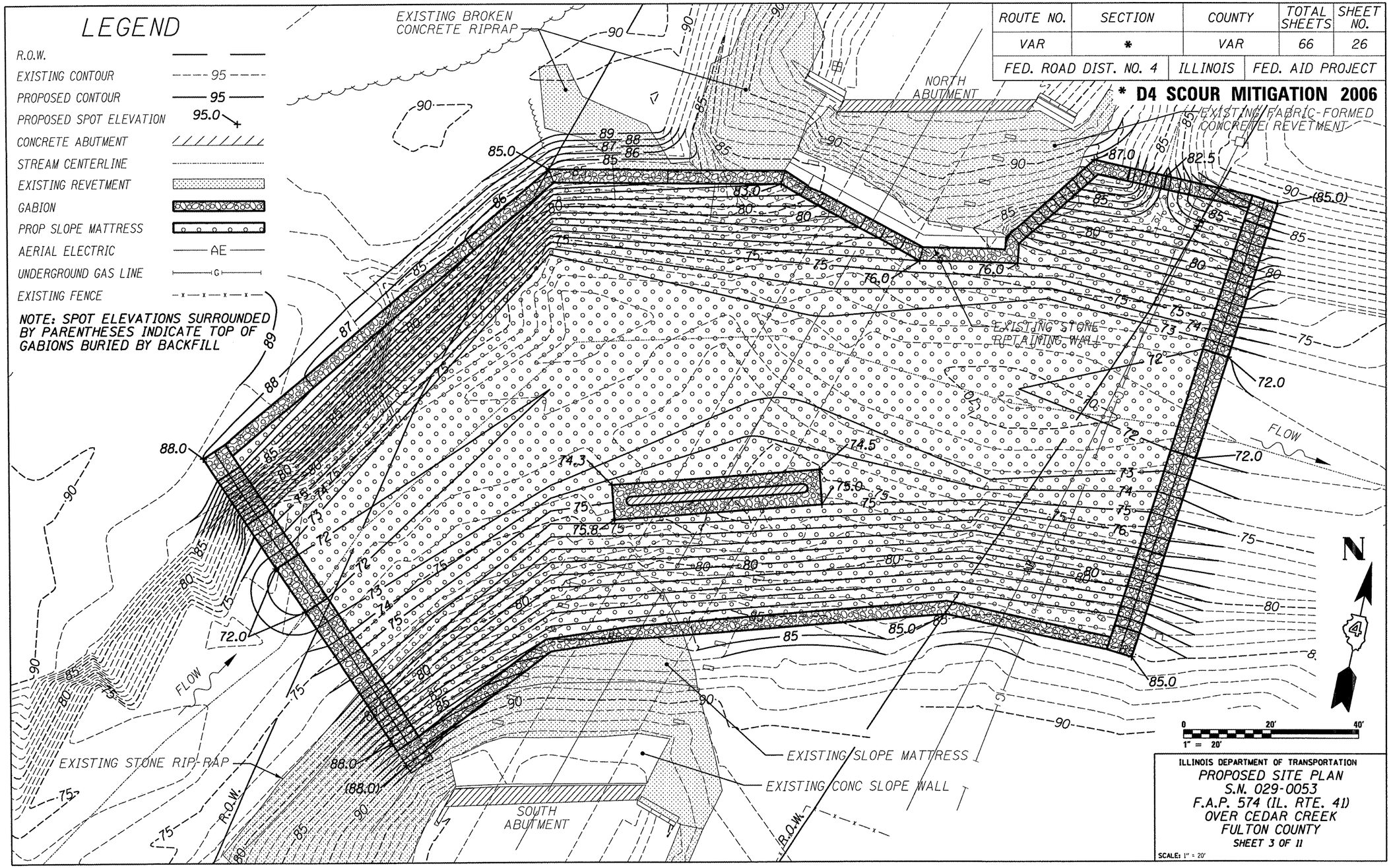

ILLINOIS DEPARTMENT OF TRANSPORTATION
PROPOSED SITE PLAN
S.N. 029-0053
F.A.P. 574 (IL. RTE. 41)
OVER CEDAR CREEK
FULTON COUNTY
SHEET 3 OF 11

SCALE: 1" = 20'

MAURER & STUTZ, INC.
ENGINEERS SURVEYORS

ROUTE NO.	SECTION	COUNTY	TOTAL SHEETS	SHEET NO.
VAR	*	VAR	66	27
FED. ROAD DIST. NO. 4		ILLINOIS	FED. AID PROJECT	

* D4 SCOUR MITIGATION 2006

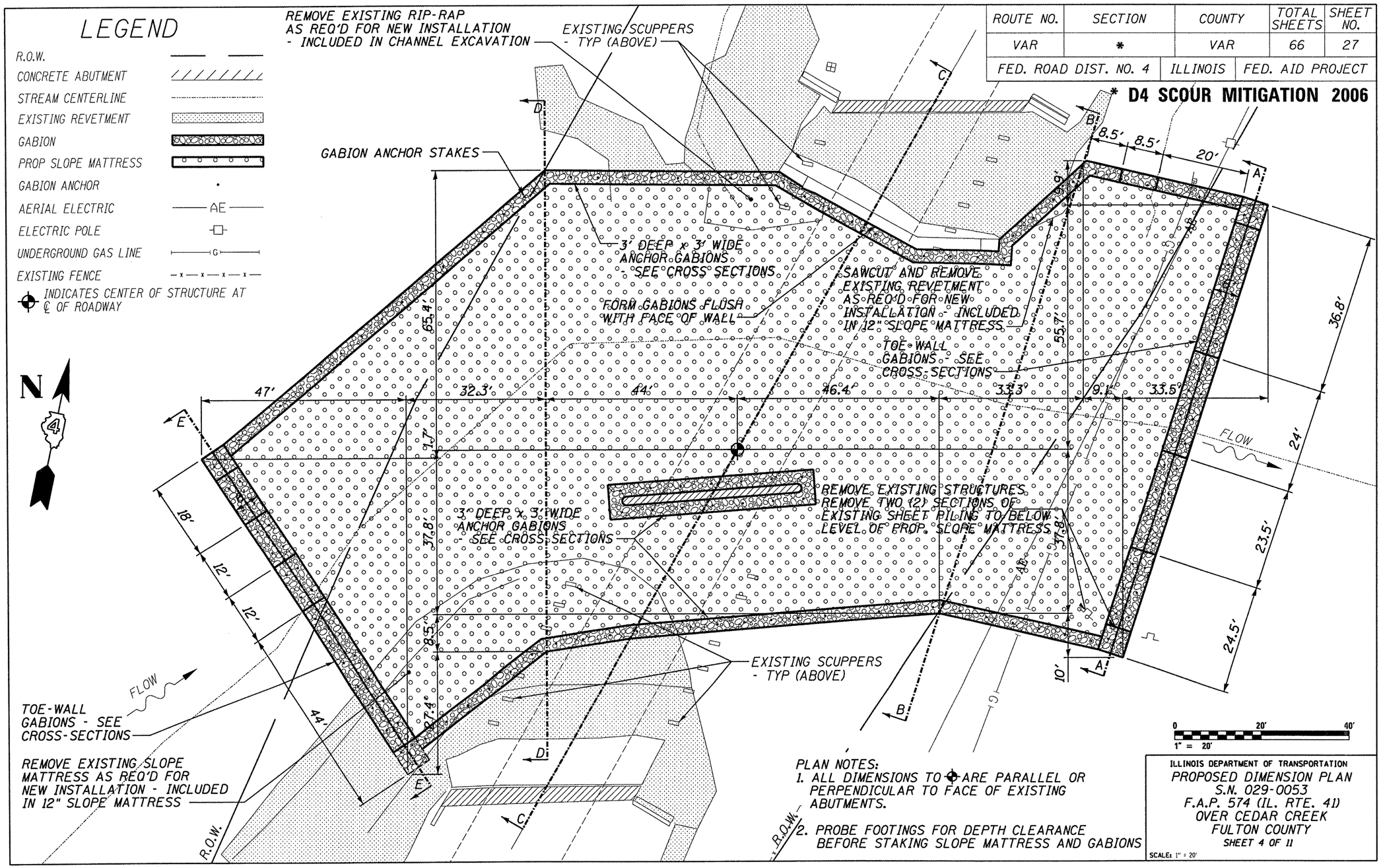

PLAN NOTES:
1. ALL DIMENSIONS TO ⌖ ARE PARALLEL OR PERPENDICULAR TO FACE OF EXISTING ABUTMENTS.
2. PROBE FOOTINGS FOR DEPTH CLEARANCE BEFORE STAKING SLOPE MATTRESS AND GABIONS

ILLINOIS DEPARTMENT OF TRANSPORTATION
PROPOSED DIMENSION PLAN
S.N. 029-0053
F.A.P. 574 (IL. RTE. 41)
OVER CEDAR CREEK
FULTON COUNTY
SHEET 4 OF 11

SCALE: 1" = 20'

MAURER ▲ STUTZ, INC.
ENGINEERS SURVEYORS

ROUTE NO.	SECTION	COUNTY	TOTAL SHEETS	SHEET NO.
VAR	*	VAR	66	28
FED. ROAD DIST. NO. 4		ILLINOIS	FED. AID PROJECT	

*** D4 SCOUR MITIGATION 2006**

NOTE: B/BRIDGE = 94.98

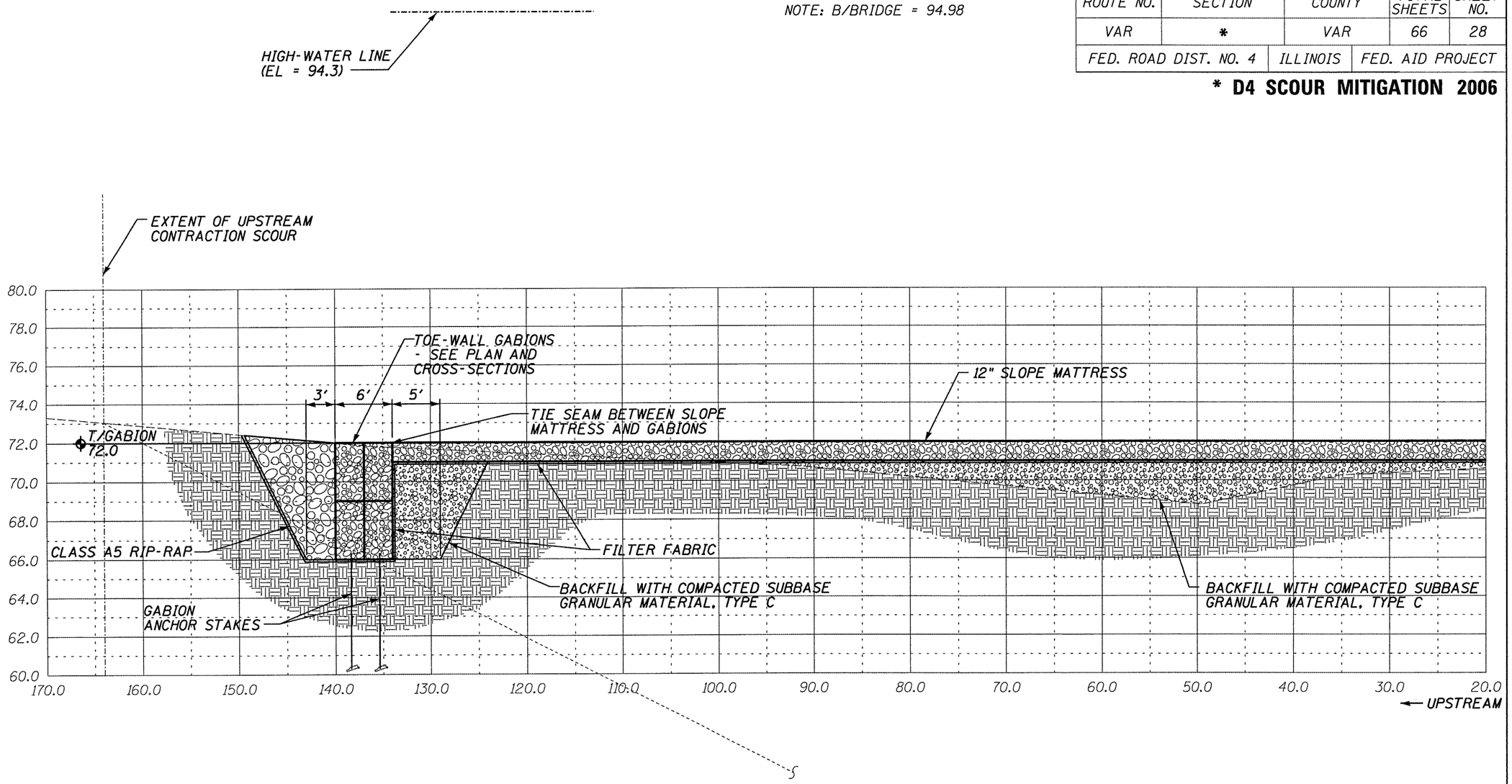

CALCULATED OPENING: 99'

MAXIMUM SCOUR CALCULATION:

CONTRACTION SCOUR EQUATION	= 32 FT
LOCAL SCOUR EQUATION	= 10 FT
ADJUSTMENT FACTOR FOR TOTAL STREAMBED ARMORING	= 0.7
TOTAL LOCAL SCOUR	= 7.0 FT
TOTAL COMBINED SCOUR	= 39.0 FT

ILLINOIS DEPARTMENT OF TRANSPORTATION

SITE PROFILE
S.N. 029-0053
F.A.P. 574 (IL. RTE. 41)
OVER CEDAR CREEK
FULTON COUNTY

SHEET 5 OF 11

SCALE: HORIZ. 1" = 10' VERT. 1" = 5'

MAURER ▲ STUTZ, INC.
ENGINEERS SURVEYORS

ROUTE NO.	SECTION	COUNTY	TOTAL SHEETS	SHEET NO.
VAR	*	VAR	66	29
FED. ROAD DIST. NO. 4	ILLINOIS	FED. AID PROJECT		

NOTE: B/BRIDGE = 94.98

*** D4 SCOUR MITIGATION 2006**

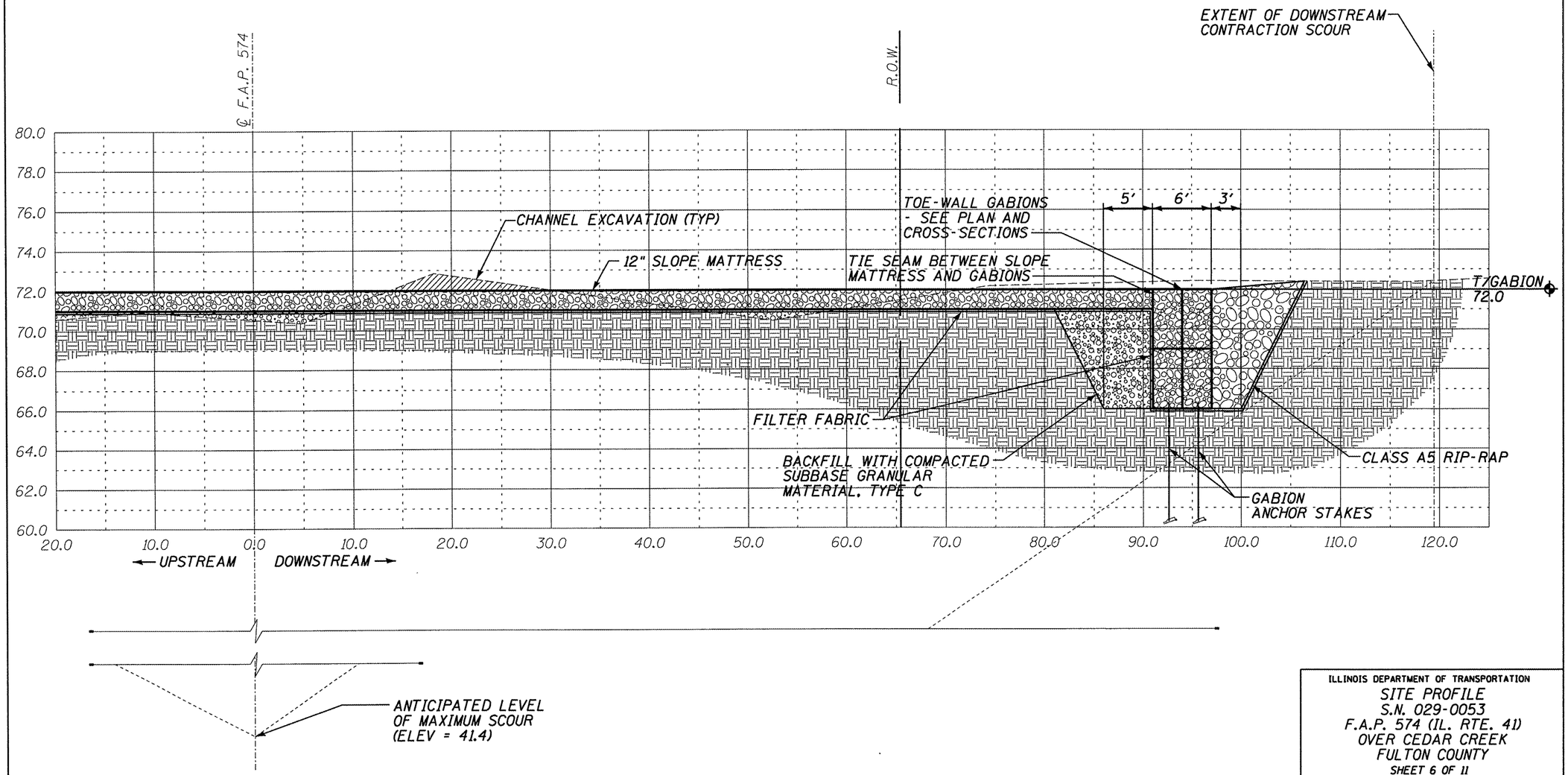

ILLINOIS DEPARTMENT OF TRANSPORTATION

SITE PROFILE
S.N. 029-0053
F.A.P. 574 (IL. RTE. 41)
OVER CEDAR CREEK
FULTON COUNTY

SHEET 6 OF 11

SCALE: HORIZ. 1" = 10' VERT. 1" = 5'

MAURER & STUTZ, INC.
ENGINEERS SURVEYORS

ROUTE NO.	SECTION	COUNTY	TOTAL SHEETS	SHEET NO.
VAR	*	VAR	66	30
FED. ROAD DIST. NO. 4	ILLINOIS	FED. AID PROJECT		

* D4 SCOUR MITIGATION 2006

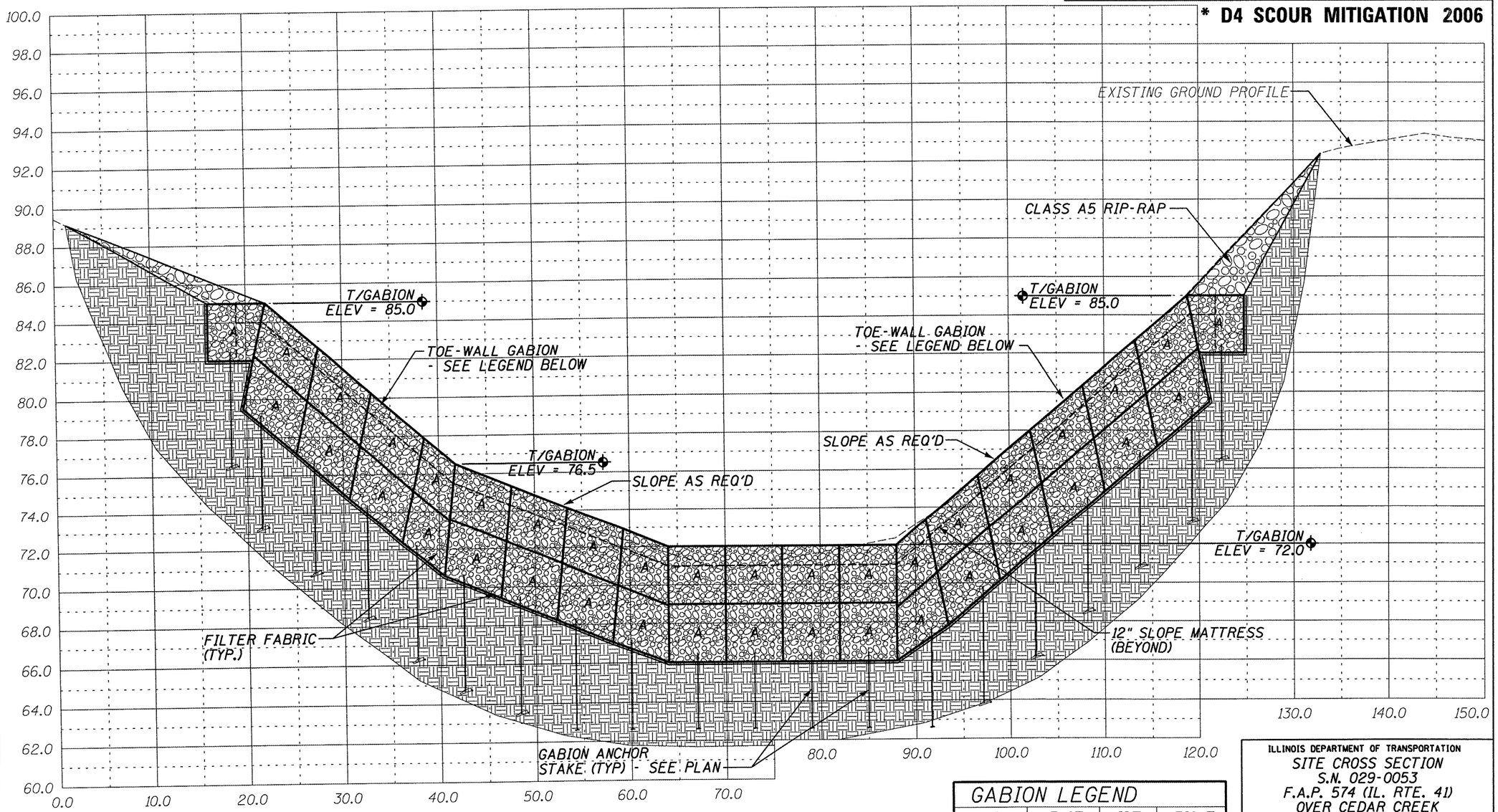

SECTION A-A THROUGH EAST GABION TOE-WALL

GABION LEGEND			
MARK	LENGTH	WIDTH	HEIGHT
A	6'	3'	3'

ILLINOIS DEPARTMENT OF TRANSPORTATION

SITE CROSS SECTION
S.N. 029-0053
F.A.P. 574 (IL. RTE. 41)
OVER CEDAR CREEK
FULTON COUNTY
SHEET 7 OF 11

SCALE: HORIZ. 1" = 10' VERT. 1" = 5'

MAURER & STUTZ, INC.
ENGINEERS SURVEYORS

ROUTE NO.	SECTION	COUNTY	TOTAL SHEETS	SHEET NO.
VAR	*	VAR	66	31
FED. ROAD DIST. NO. 4		ILLINOIS	FED. AID PROJECT	

*** D4 SCOUR MITIGATION 2006**

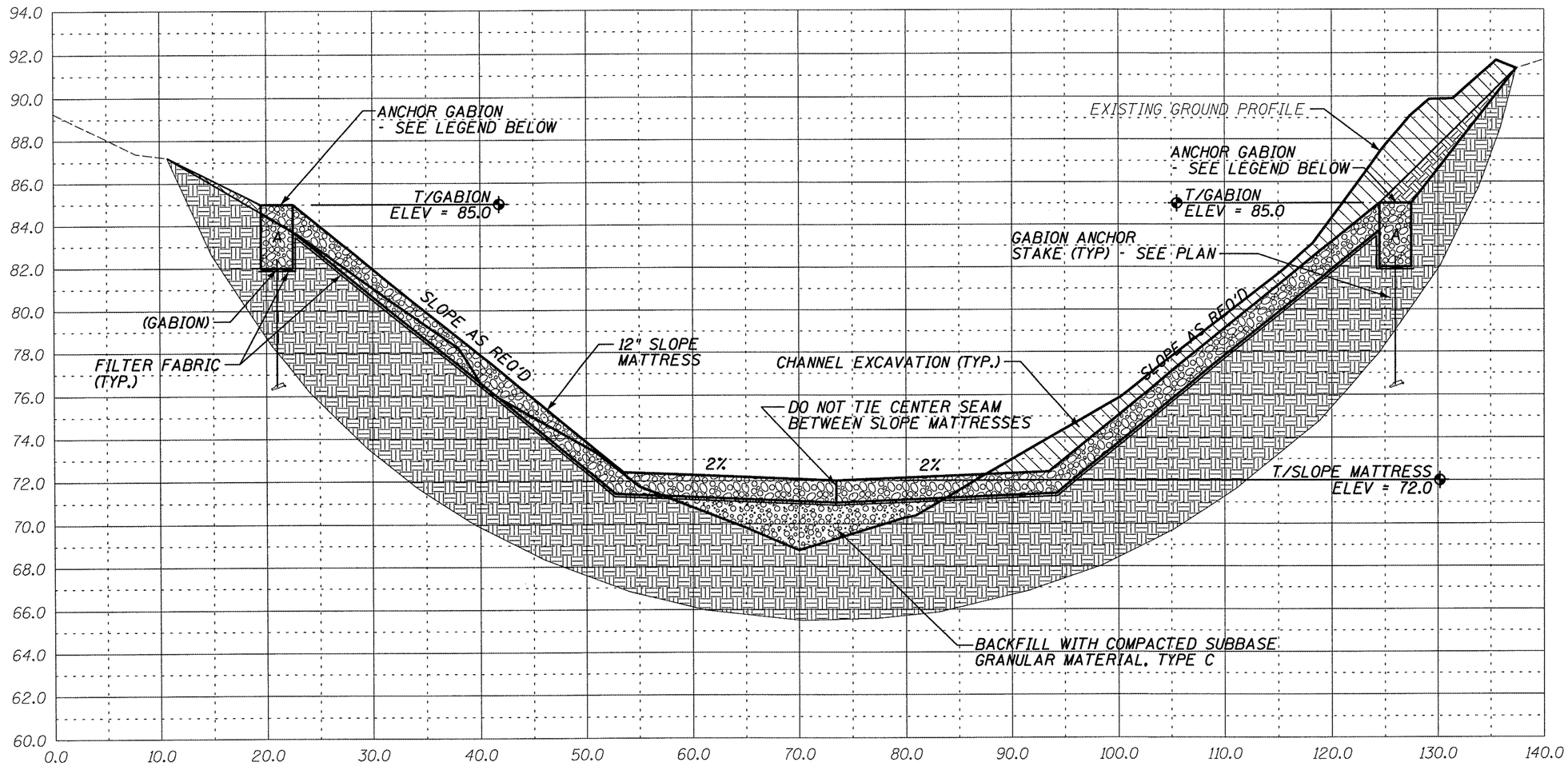

SECTION B-B

GABION LEGEND			
MARK	LENGTH	WIDTH	HEIGHT
A	6'	3'	3'

ILLINOIS DEPARTMENT OF TRANSPORTATION
SITE CROSS SECTION
S.N. 029-0053
F.A.P. 574 (IL. RTE. 41)
OVER CEDAR CREEK
FULTON COUNTY
SHEET 8 OF 11

SCALE: HORIZ. 1" = 10' VERT. 1" = 5'

MAURER & STUTZ, INC.
ENGINEERS SURVEYORS

ROUTE NO.	SECTION	COUNTY	TOTAL SHEETS	SHEET NO.
VAR	*	VAR	66	32
FED. ROAD DIST. NO. 4		ILLINOIS	FED. AID PROJECT	

* D4 SCOUR MITIGATION 2006

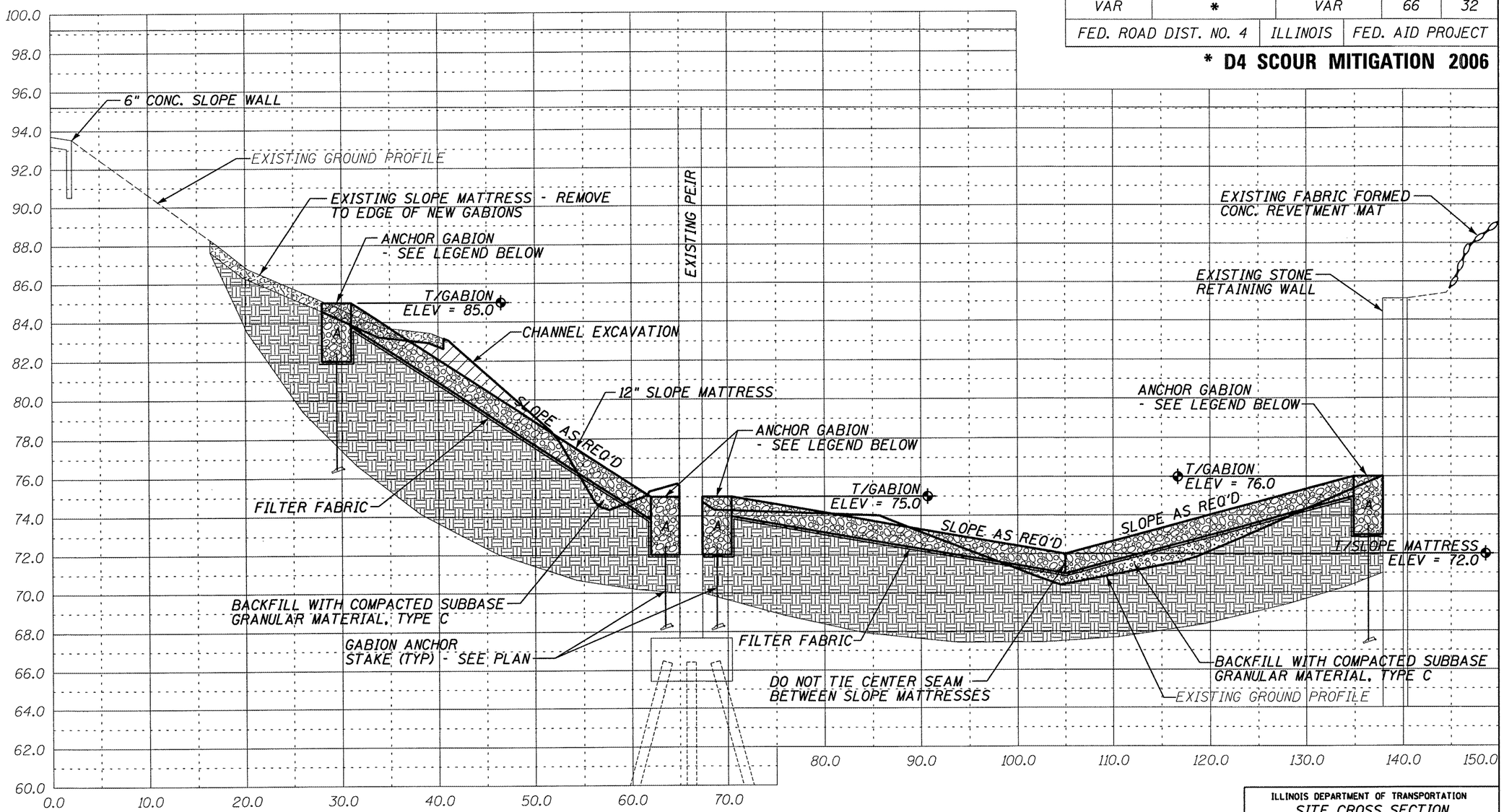

SECTION C-C THROUGH ℄ F.A. 574

GABION LEGEND			
MARK	LENGTH	WIDTH	HEIGHT
A	6'	3'	3'

ILLINOIS DEPARTMENT OF TRANSPORTATION
SITE CROSS SECTION
S.N. 029-0053
F.A.P. 574 (IL. RTE. 41)
OVER CEDAR CREEK
FULTON COUNTY
SHEET 9 OF 11

SCALE: HORIZ. 1" = 10' VERT. 1" = 5'

MAURER & STUTZ, INC.
ENGINEERS SURVEYORS

ROUTE NO.	SECTION	COUNTY	TOTAL SHEETS	SHEET NO.
VAR	*	VAR	66	33
FED. ROAD DIST. NO. 4		ILLINOIS	FED. AID PROJECT	

*** D4 SCOUR MITIGATION 2006**

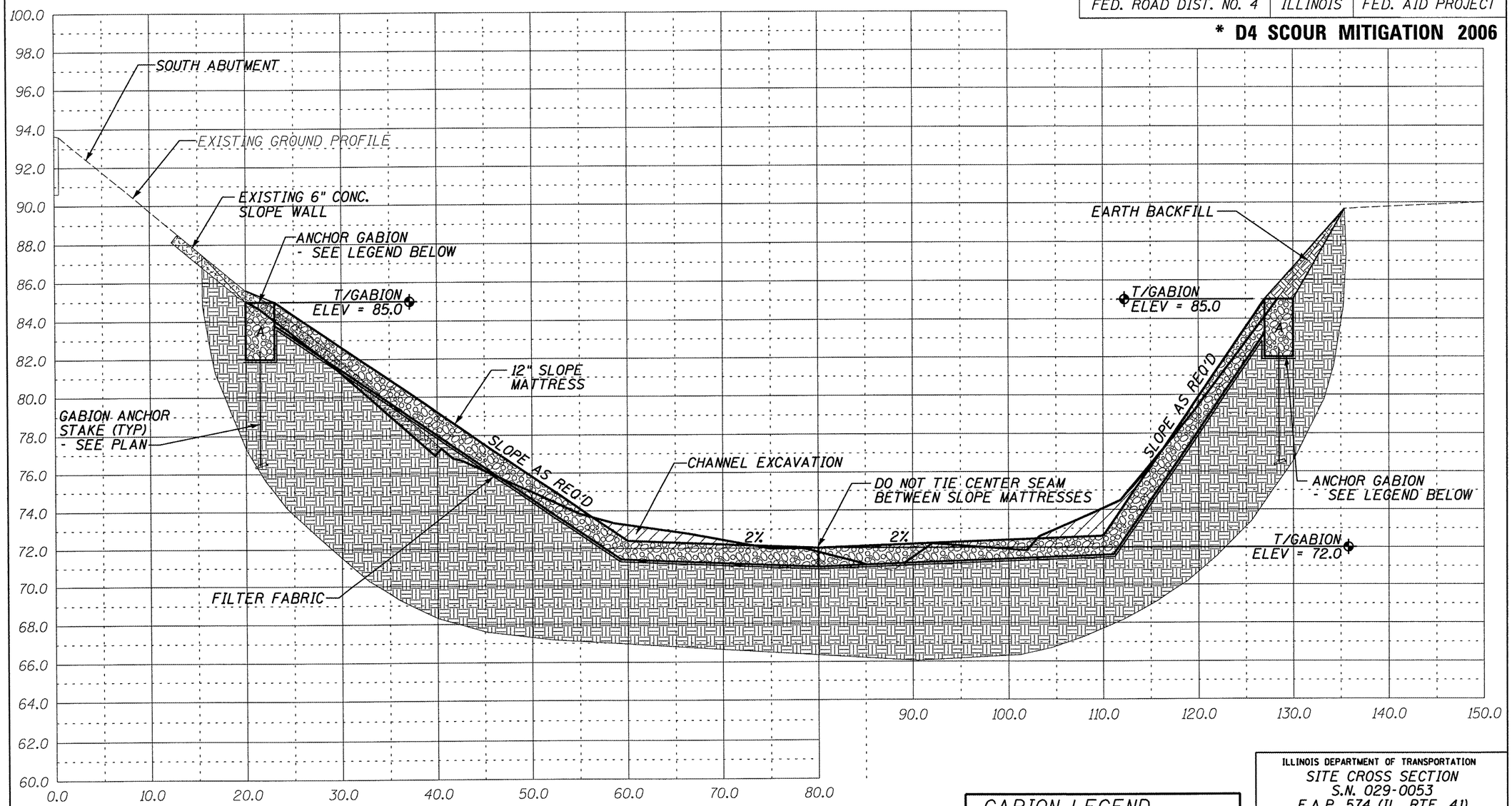

SECTION D-D

GABION LEGEND			
MARK	LENGTH	WIDTH	HEIGHT
A	6'	3'	3'

ILLINOIS DEPARTMENT OF TRANSPORTATION
SITE CROSS SECTION
S.N. 029-0053
F.A.P. 574 (IL. RTE. 41)
OVER CEDAR CREEK
FULTON COUNTY
SHEET 10 OF 11

SCALE: HORIZ. 1" = 10' VERT. 1" = 5'

MAURER ▲ STUTZ, INC.
ENGINEERS SURVEYORS

ROUTE NO.	SECTION	COUNTY	TOTAL SHEETS	SHEET NO.
VAR	*	VAR	66	34
FED. ROAD DIST. NO. 4		ILLINOIS	FED. AID PROJECT	

*** D4 SCOUR MITIGATION 2006**

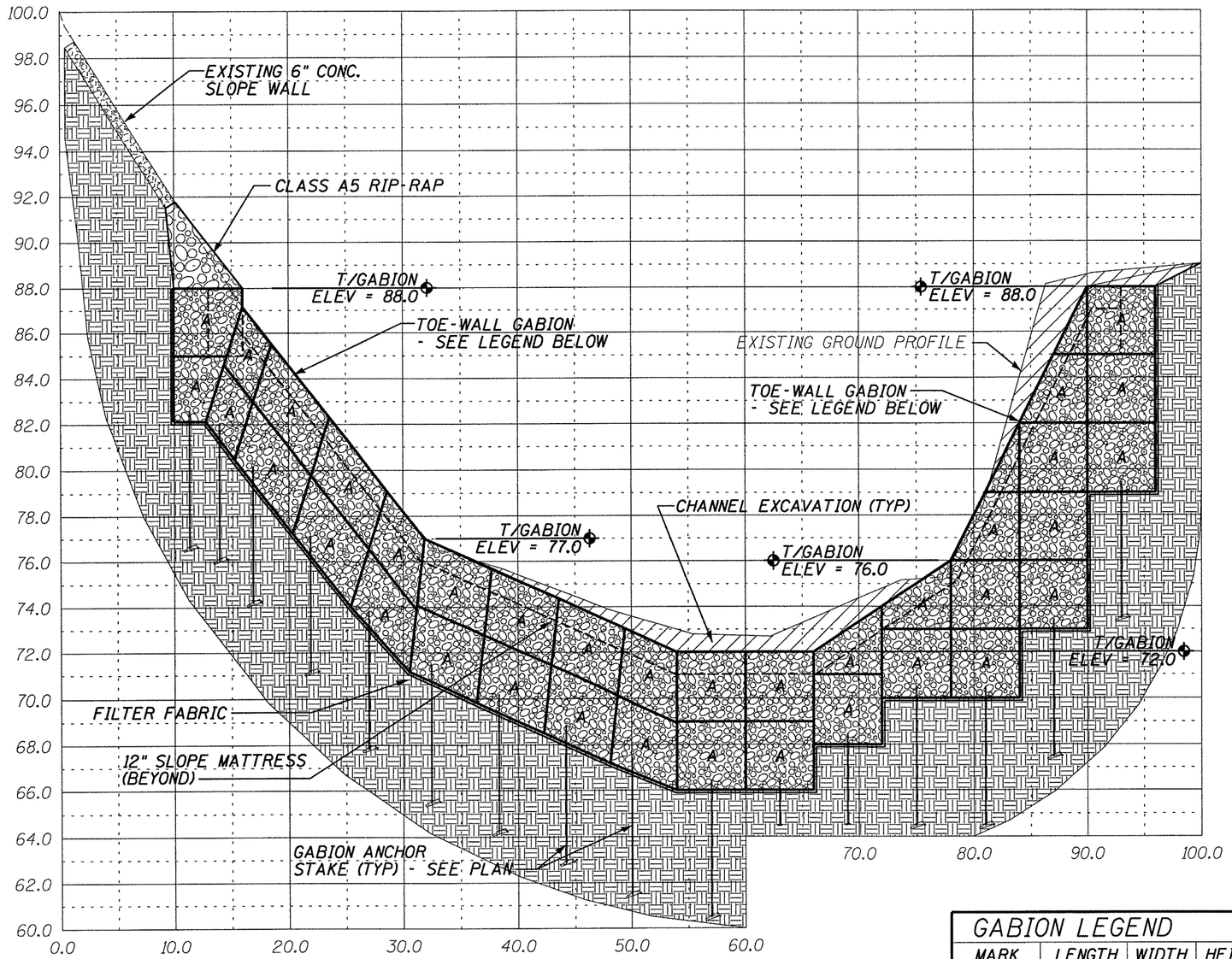

SECTION E-E THROUGH WEST GABION TOE-WALL

GABION LEGEND			
MARK	LENGTH	WIDTH	HEIGHT
A	6'	3'	3'

ILLINOIS DEPARTMENT OF TRANSPORTATION

SITE CROSS SECTION
S.N. 029-0053
F.A.P. 574 (IL. RTE. 41)
OVER CEDAR CREEK
FULTON COUNTY

SHEET 11 OF 11

SCALE: HORIZ. 1" = 10' VERT. 1" = 5'

MAURER & STUTZ, INC.
ENGINEERS SURVEYORS

BENCHMARK: CHISLED SQUARE ON THE SOUTH FACE OF THE NORTHEAST CORNER ELEV. = 100.00

EXISTING STRUCTURE: SN 062-0014 IS A 40'-0" WIDE BY 28'-0" LONG R.C. SLAB. THE SUBSTRUCTURE CONSISTS OF R.C. ABUTMENTS AND WINGWALLS.

ROUTE NO.	SECTION	COUNTY	TOTAL SHEETS	SHEET NO.
VAR	*	VAR	66	35
FED. ROAD DIST. NO. 4	ILLINOIS	FED. AID PROJECT		

* D4 SCOUR MITIGATION 2006

INDEX OF SHEETS

SHEET NUMBER	DESCRIPTION
1	GENERAL PLAN AND PROFILE, SUMMARY OF QUANTITIES, LOCATION MAP
2	R.O.W. PLAN
3	PROPOSED SITE PLAN
4	SITE PROFILE
5-7	SITE CROSS SECTIONS

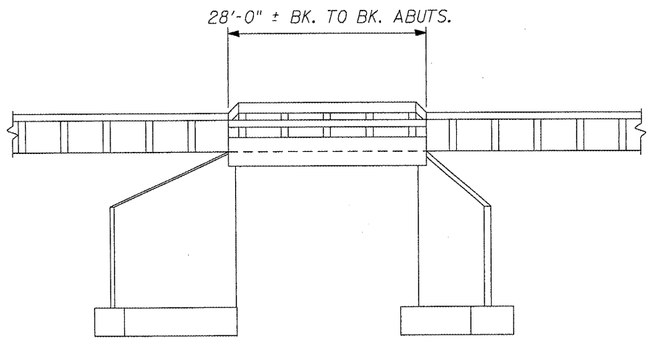

ELEVATION

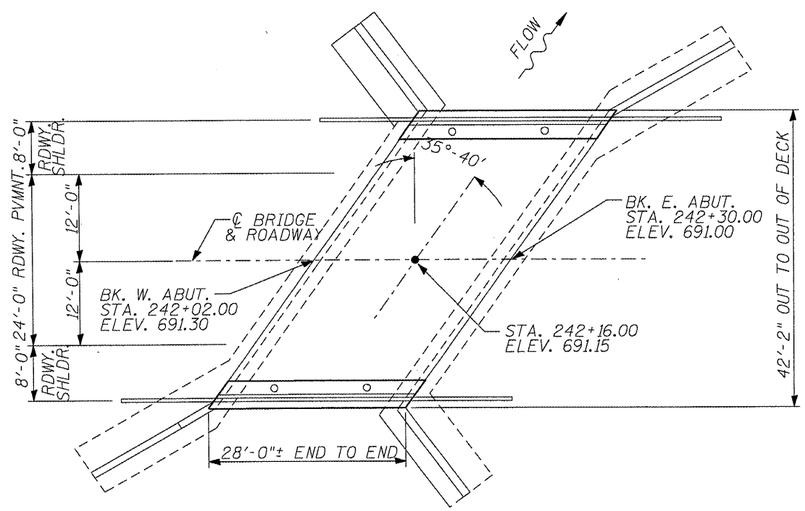

PLAN

N

EXISTING BRIDGE

BILL OF MATERIALS

ITEM	UNIT	TOTAL
CHANNEL EXCAVATION	CU YD	89
STONE RIP-RAP, CLASS A5	TONS	550
FILTER FABRIC	SQ YD	324
REMOVE AND REPLACE STEEL PLATE GUARD RAIL, TYPE A	FOOT	50
DEWATERING STRUCTURE NO. 4	EACH	1

DAVID L. MAURER 062-030577 LICENSED PROFESSIONAL ENGINEER OF ILLINOIS

David L. Maurer, P.E.
Exp. Date 11/2009
P.E. No.: 062-030577

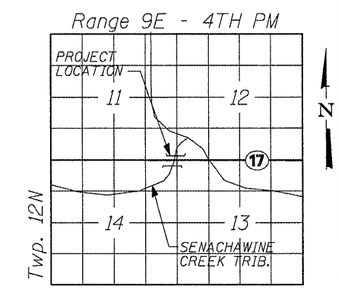

LOCATION SKETCH

WATERWAY/SCOUR INFORMATION

DESIGN FLOOD	100 YRS
DRAINAGE AREA	1.7 SQ MI
FLOW	1,420 CFS
FLOW DEPTH	8.96 FT
REQUIRED OPENING	200 SQ FT
PROVIDED OPENING	348 SQ FT
CONTRACTION SCOUR DEPTH	7 FT

ILLINOIS DEPARTMENT OF TRANSPORTATION

GENERAL PLAN & ELEVATION
S.N. 062-0014
F.A.P. 645 (IL. 17) OVER
SENACHWINE CREEK TRIBUTARY
MARSHALL COUNTY

SHEET 1 OF 7

MAURER STUTZ, INC. ENGINEERS SURVEYORS

ROUTE NO.	SECTION	COUNTY	TOTAL SHEETS	SHEET NO.
VAR	*	VAR	66	36
FED. ROAD DIST. NO. 4		ILLINOIS	FED. AID PROJECT	

*** D4 SCOUR MITIGATION 2006**

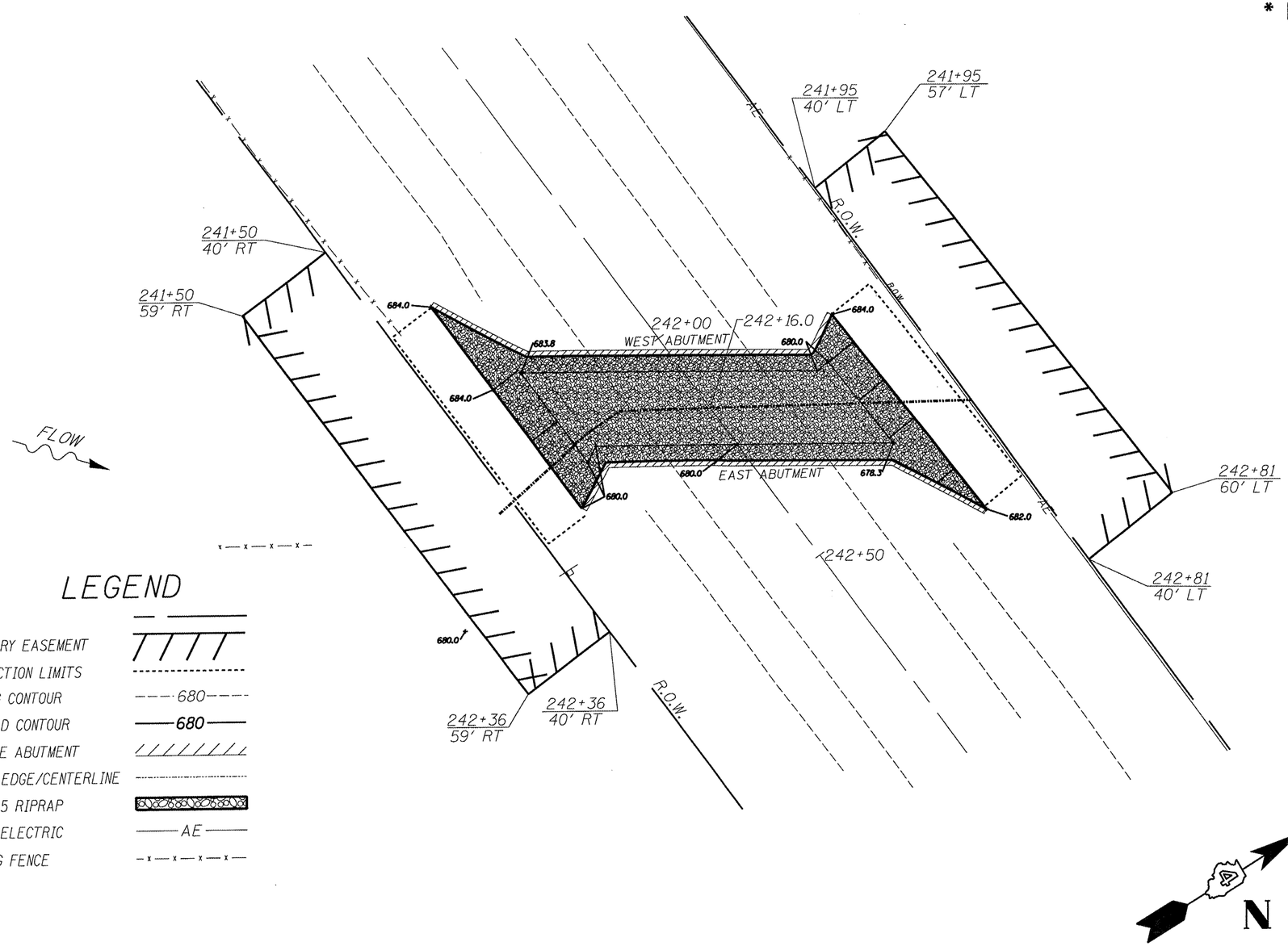

ILLINOIS DEPARTMENT OF TRANSPORTATION
R.O.W. PLAN
S.N. 062-0014
F.A.P. 645 (IL. RTE. 17)
OVER SENACHWINE CREEK
MARSHALL COUNTY
SHEET 2 OF 7

SCALE: 1" = 20'

MAURER & STUTZ, INC.
ENGINEERS SURVEYORS

ROUTE NO.	SECTION	COUNTY	TOTAL SHEETS	SHEET NO.
VAR	*	VAR	66	37
FED. ROAD DIST. NO. 4		ILLINOIS	FED. AID PROJECT	

* D4 SCOUR MITIGATION 2006

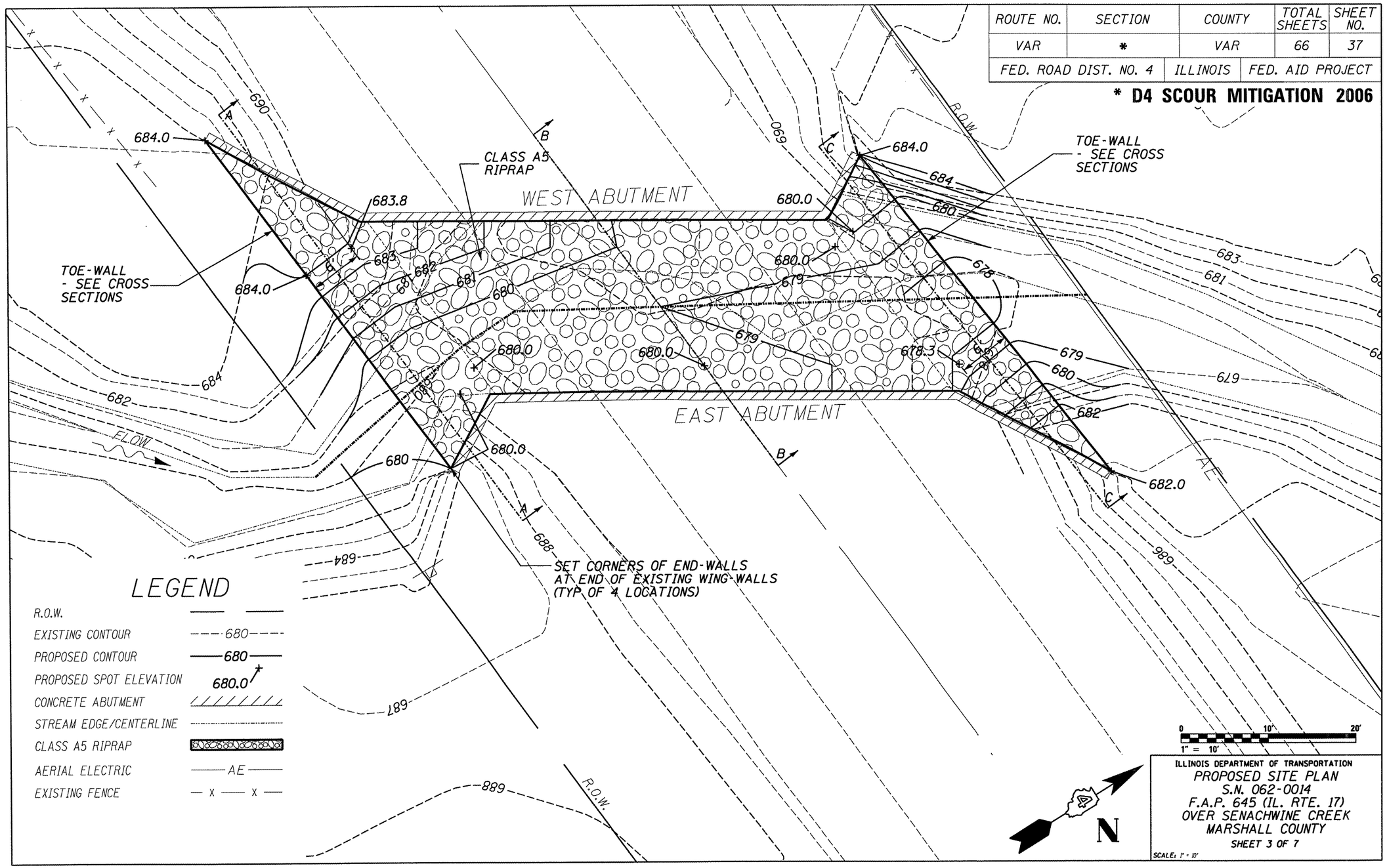

MAURER & STUTZ, INC.
ENGINEERS SURVEYORS

ROUTE NO.	SECTION	COUNTY	TOTAL SHEETS	SHEET NO.
VAR	*	VAR	66	38
FED. ROAD DIST. NO. 4	ILLINOIS	FED. AID PROJECT		

*** D4 SCOUR MITIGATION 2006**

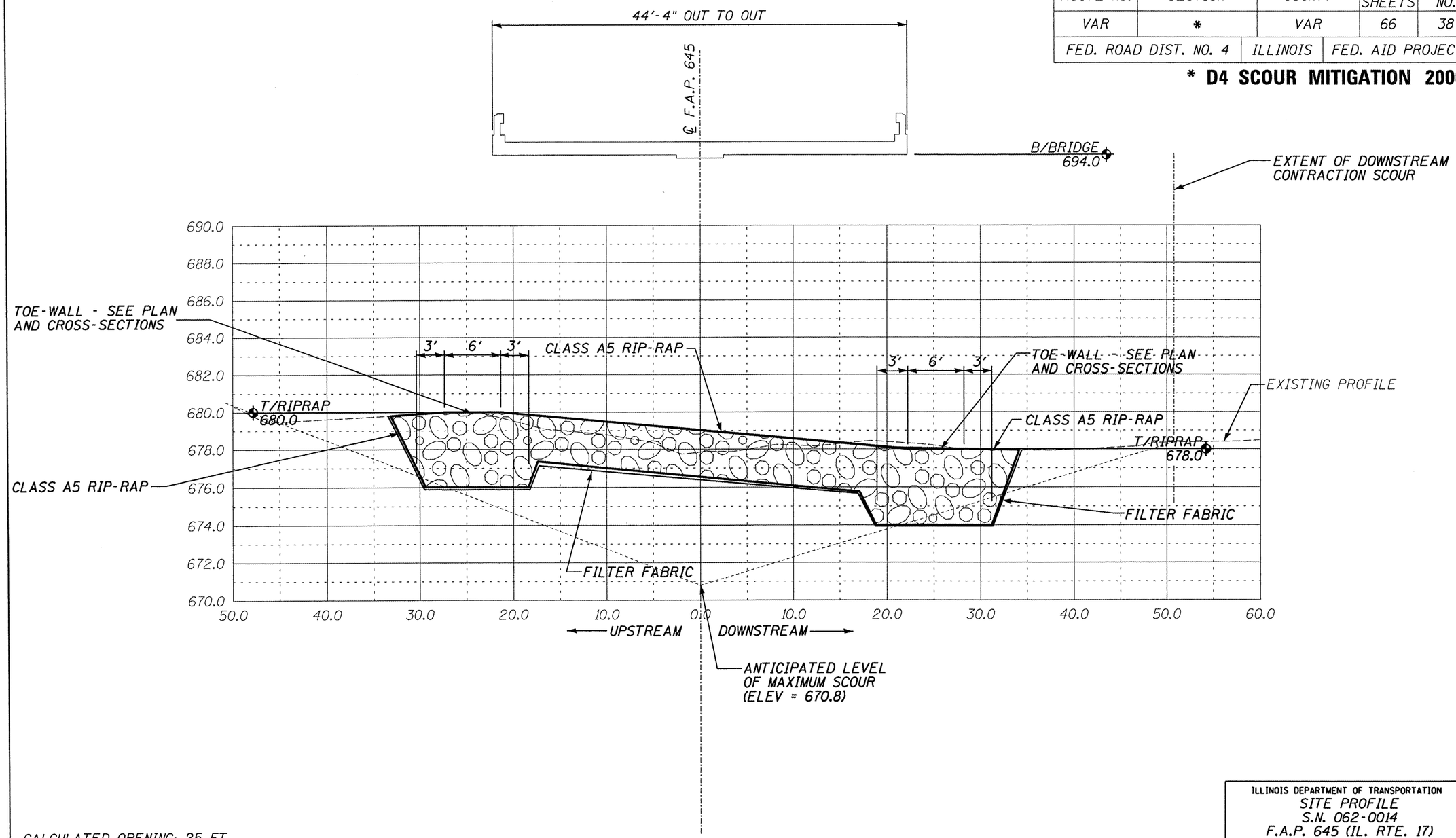

CALCULATED OPENING: 25 FT

MAXIMUM SCOUR CALCULATION:
CONTRACTION SCOUR = 7 FT

ILLINOIS DEPARTMENT OF TRANSPORTATION
SITE PROFILE
S.N. 062-0014
F.A.P. 645 (IL. RTE. 17)
OVER SENACHWINE CREEK
MARSHALL COUNTY
SHEET 4 OF 7
SCALE: VERT. 1" = 5' HORIZ. 1" = 10'

MAURER ▲ STUTZ, INC.
ENGINEERS SURVEYORS

ROUTE NO.	SECTION	COUNTY	TOTAL SHEETS	SHEET NO.
VAR	*	VAR	66	39
FED. ROAD DIST. NO. 4		ILLINOIS	FED. AID PROJECT	

*** D4 SCOUR MITIGATION 2006**

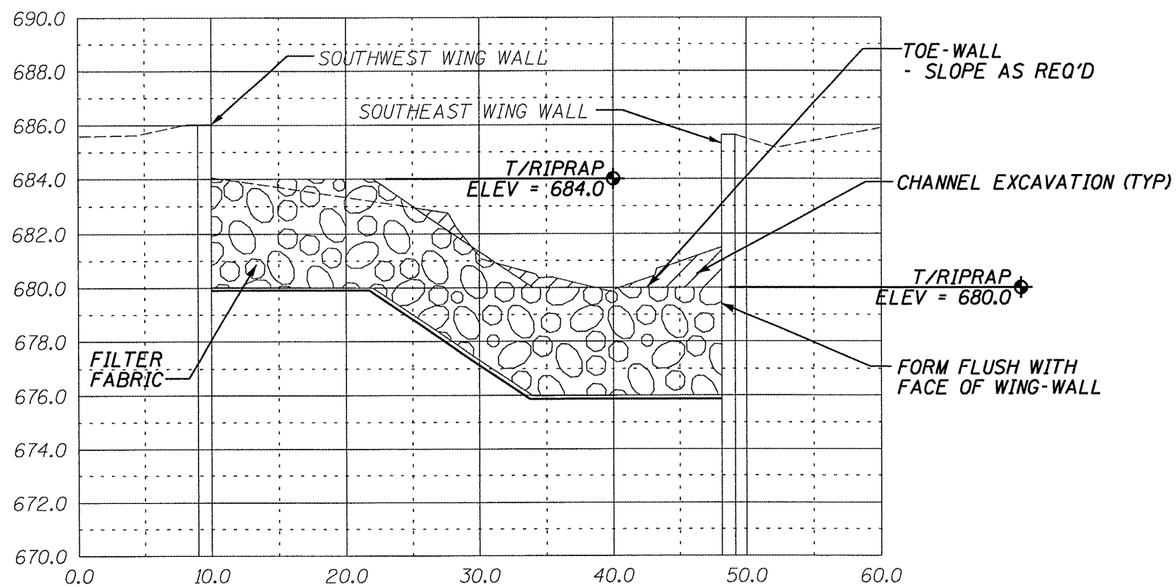

SECTION A-A THROUGH SOUTH TOE-WALL

ILLINOIS DEPARTMENT OF TRANSPORTATION
SITE CROSS SECTION
S.N. 062-0014
F.A.P. 645 (IL. RTE. 17)
OVER SENACHWINE CREEK
MARSHALL COUNTY
SHEET 5 OF 7
SCALE: VERT. 1" = 5' HORIZ. 1" = 10'

MAURER & STUTZ, INC.
ENGINEERS SURVEYORS

ROUTE NO.	SECTION	COUNTY	TOTAL SHEETS	SHEET NO.
VAR	*	VAR	66	40
FED. ROAD DIST. NO. 4		ILLINOIS	FED. AID PROJECT	

*** D4 SCOUR MITIGATION 2006**

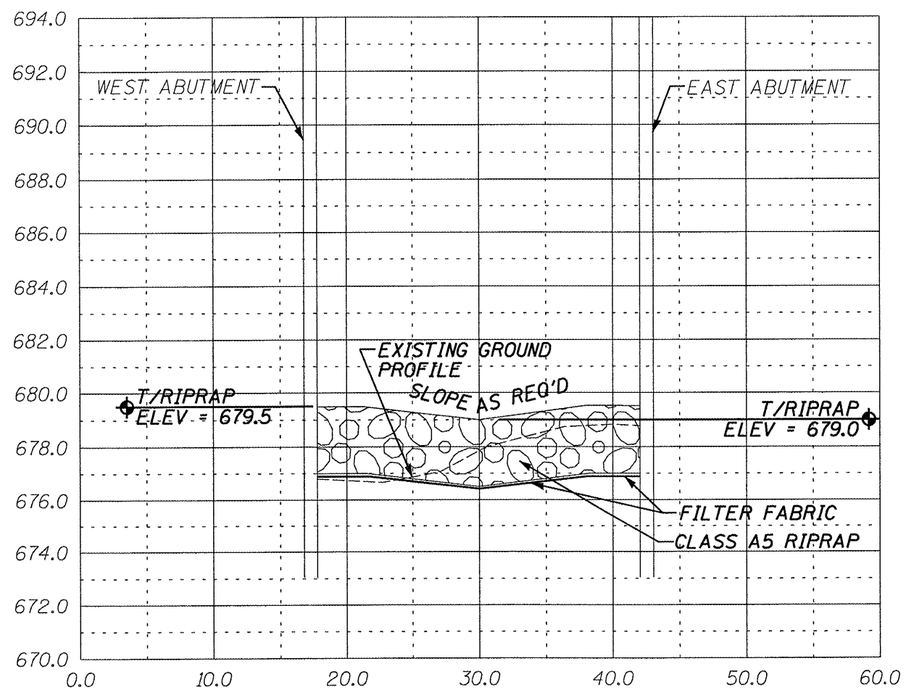

SECTION B-B THROUGH ℄ F.A.P. RTE. 645

ILLINOIS DEPARTMENT OF TRANSPORTATION
SITE CROSS SECTION
S.N. 062-0014
F.A.P. 645 (IL. RTE. 17)
OVER SENACHWINE CREEK
MARSHALL COUNTY
SHEET 6 OF 7
SCALE: VERT. 1" = 5' HORIZ. 1" = 10'

MAURER & STUTZ, INC.
ENGINEERS SURVEYORS

ROUTE NO.	SECTION	COUNTY	TOTAL SHEETS	SHEET NO.
VAR	*	VAR	66	41
FED. ROAD DIST. NO. 4	ILLINOIS	FED. AID PROJECT		

*** D4 SCOUR MITIGATION 2006**

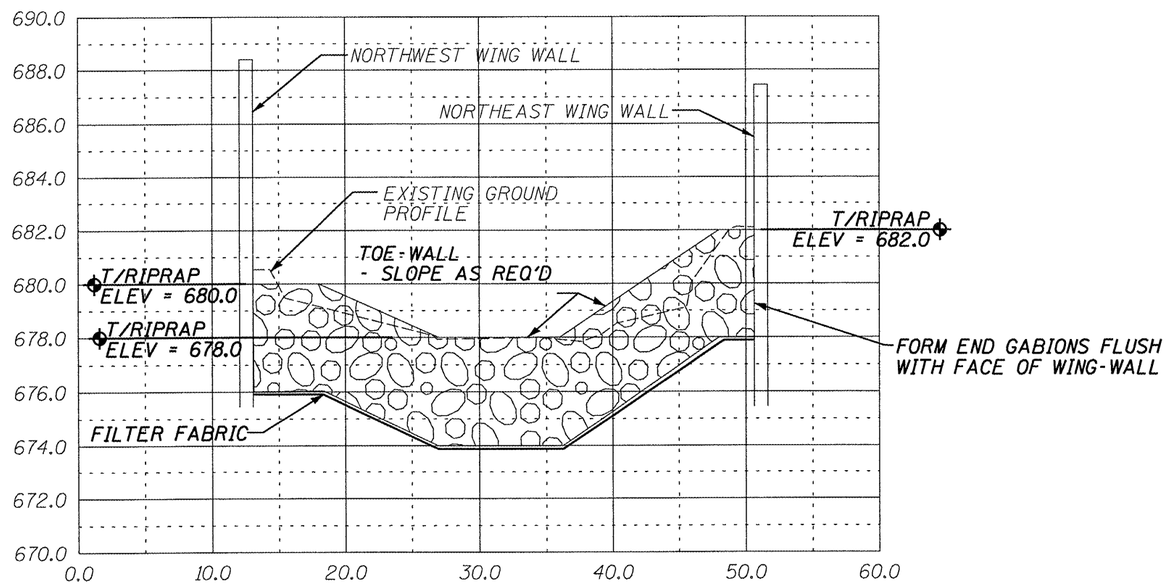

SECTION C-C THROUGH NORTH TOE-WALL

ILLINOIS DEPARTMENT OF TRANSPORTATION
SITE CROSS SECTION
S.N. 062-0014
F.A.P. 645 (IL. RTE. 17)
OVER SENACHWINE CREEK
MARSHALL COUNTY
SHEET 7 OF 7
SCALE: VERT. 1" = 5' HORIZ. 1" = 10'

MAURER & STUTZ, INC.
ENGINEERS SURVEYORS

BENCHMARK: TOP 3RD. STEP BRACKET ON TELEGRAPH POLE BTWN. TRACKS NORTH OF BRIDGE (2ND. BRACKET EAST SIDE OF POLE, 4' OFF GROUND) ELEV.= 475.62 FT.

EXISTING STRUCTURE: SN 072-0037 IS AN 11 SPAN R.C. DECK ON STRUCTURAL STEEL 637'-10¼" BY 62'-0" SUPERSTRUCTURE WITH R.C. CLOSED ABUTMENTS AND PIERS.

ROUTE NO.	SECTION	COUNTY	TOTAL SHEETS	SHEET NO.
VAR	*	VAR	66	42
FED. ROAD DIST. NO. 4		ILLINOIS	FED. AID PROJECT	

*** D4 SCOUR MITIGATION 2006**

INDEX OF SHEETS

SHEET NUMBER	DESCRIPTION
1	GENERAL PLAN AND PROFILE, SUMMARY OF QUANTITIES, LOCATION MAP
2	SITE PLAN
3-4	SITE DETAILS
5-15	CROSS SECTIONS

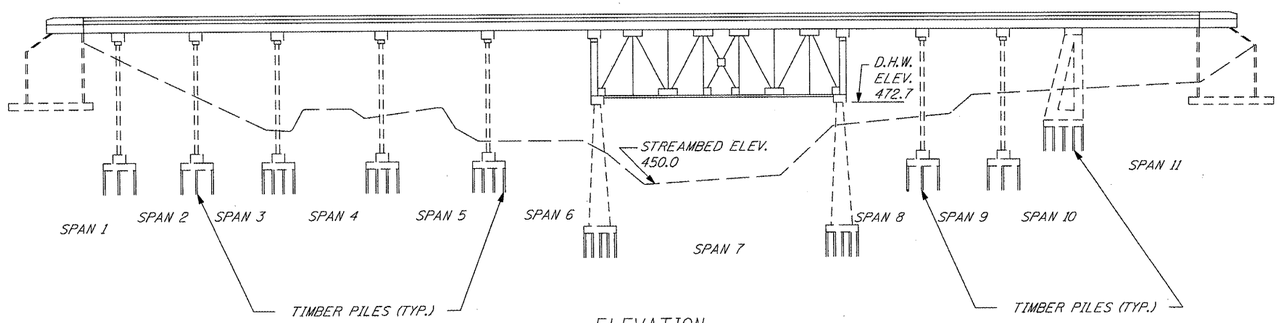

ELEVATION

BILL OF MATERIALS

ITEM	UNIT	TOTAL
CHANNEL EXCAVATION	CU YD	1403
PERIMETER EROSION CONTROL BARRIER	FOOT	422
FILTER FABRIC	SQ YD	3717
STONE RIP-RAP, CLASS A3, 12"	TONS	341
STONE RIPRAP, CLASS A5	SQ YD	2850
DEWATERING STRUCTURE NO. 5	EACH	1
RAILROAD PROT. LIABILITY INSURANCE	L SUM	1

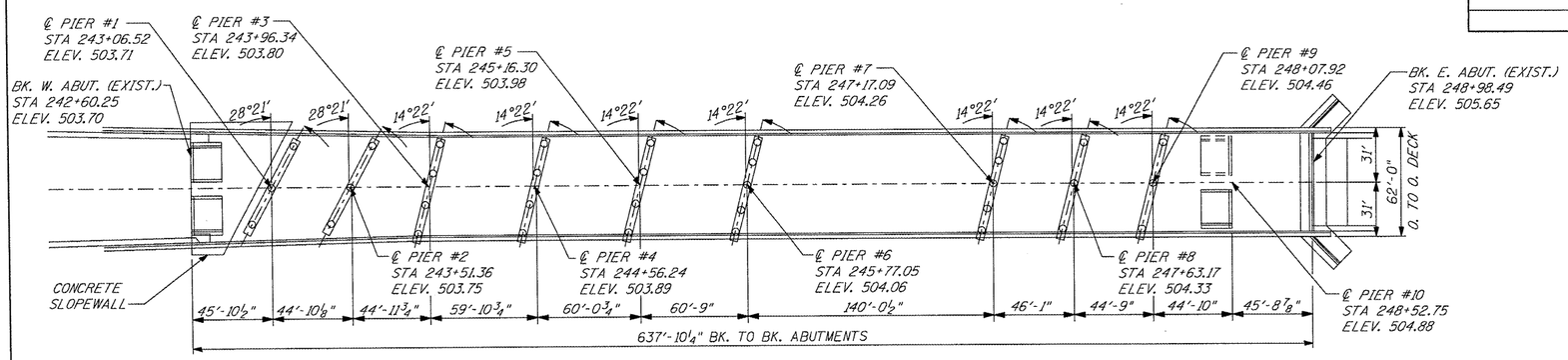

PLAN

EXISTING BRIDGE

DAVID L. MAURER 062-030577 LICENSED PROFESSIONAL ENGINEER OF ILLINOIS

David L. Maurer, P.E.
Exp. Date 11/2009
P.E. No.: 062-030577

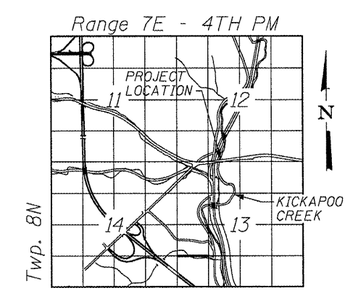

LOCATION SKETCH

WATERWAY/SCOUR INFORMATION

DESIGN FLOOD	100 YRS
DRAINAGE AREA	295.2 SQ MI
FLOW	5,600 CFS
FLOW DEPTH	26 FT
CONTRACTION SCOUR DEPTH	38 FT

ILLINOIS DEPARTMENT OF TRANSPORTATION
GENERAL PLAN & ELEVATION
S.N. 072-0037
F.A.P. 669 (IL RTE. 116) OVER BN & CNW R.R., KICKAPOO CREEK & CH 77 F.A. RTE. 669
PEORIA COUNTY
SHEET 1 OF 15

MAURER & STUTZ, INC. ENGINEERS SURVEYORS

ROUTE NO.	SECTION	COUNTY	TOTAL SHEETS	SHEET NO.
VAR	*	VAR	66	43
FED. ROAD DIST. NO. 4		ILLINOIS	FED. AID PROJECT	

* D4 SCOUR MITIGATION 2006

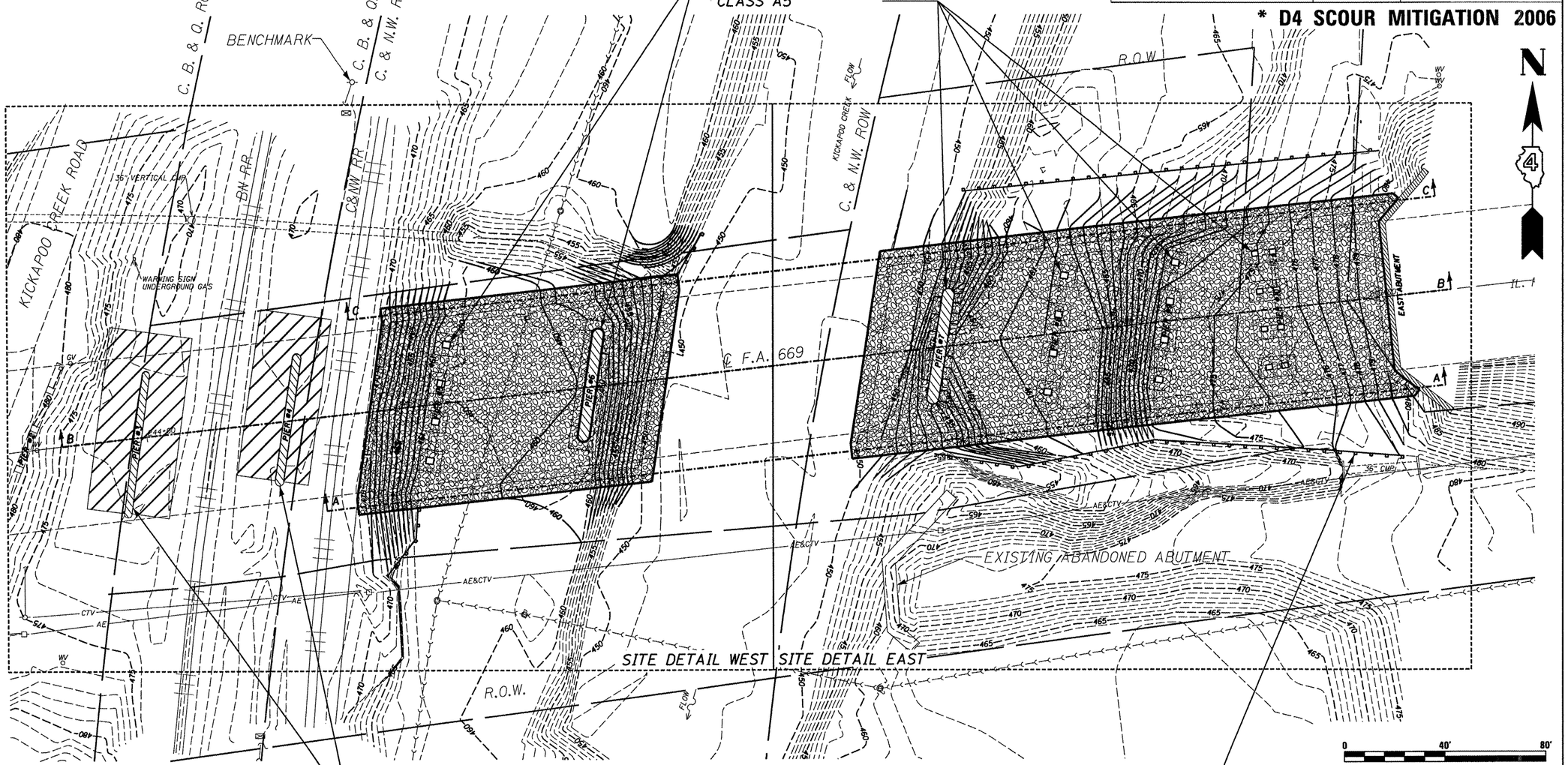

ILLINOIS DEPARTMENT OF TRANSPORTATION

PROPOSED SITE PLAN
S.N. 072-0037
F.A.P. 669 (IL RTE. 116) OVER
BN & CNW R.R., KICKAPOO CREEK
& CH 77 F.A. RTE. 669
PEORIA COUNTY

SCALE: 1" = 40'

SHEET 2 OF 15

MAURER & STUTZ, INC.
ENGINEERS SURVEYORS

ROUTE NO.	SECTION	COUNTY	TOTAL SHEETS	SHEET NO.
VAR	*	VAR	66	44
FED. ROAD DIST. NO. 4	ILLINOIS	FED. AID PROJECT		

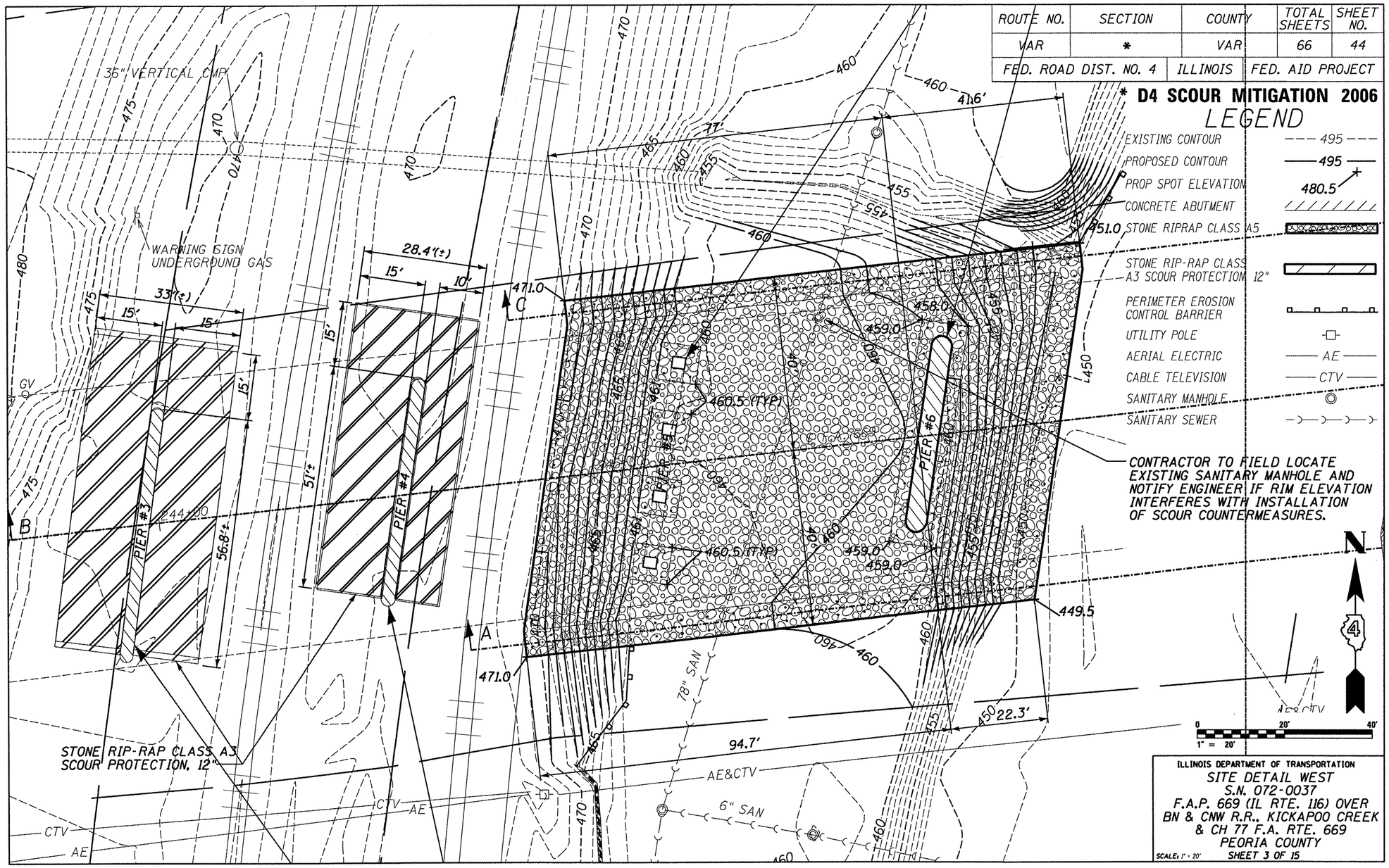

* D4 SCOUR MITIGATION 2006

LEGEND

EXISTING CONTOUR	--- 495 ---
PROPOSED CONTOUR	—— 495 ——
PROP SPOT ELEVATION	480.5 +
CONCRETE ABUTMENT	
451.0 STONE RIPRAP CLASS A5	
STONE RIP-RAP CLASS A3 SCOUR PROTECTION 12"	
PERIMETER EROSION CONTROL BARRIER	
UTILITY POLE	
AERIAL ELECTRIC	—— AE ——
CABLE TELEVISION	—— CTV ——
SANITARY MANHOLE	
SANITARY SEWER	

CONTRACTOR TO FIELD LOCATE EXISTING SANITARY MANHOLE AND NOTIFY ENGINEER IF RIM ELEVATION INTERFERES WITH INSTALLATION OF SCOUR COUNTERMEASURES.

ILLINOIS DEPARTMENT OF TRANSPORTATION

SITE DETAIL WEST
S.N. 072-0037
F.A.P. 669 (IL RTE. 116) OVER
BN & CNW R.R., KICKAPOO CREEK
& CH 77 F.A. RTE. 669
PEORIA COUNTY

SCALE: 1" = 20' SHEET 3 OF 15

MAURER & STUTZ, INC.
ENGINEERS SURVEYORS

ROUTE NO.	SECTION	COUNTY	TOTAL SHEETS	SHEET NO.
VAR	*	VAR	66	45
FED. ROAD DIST. NO. 4		ILLINOIS	FED. AID PROJECT	

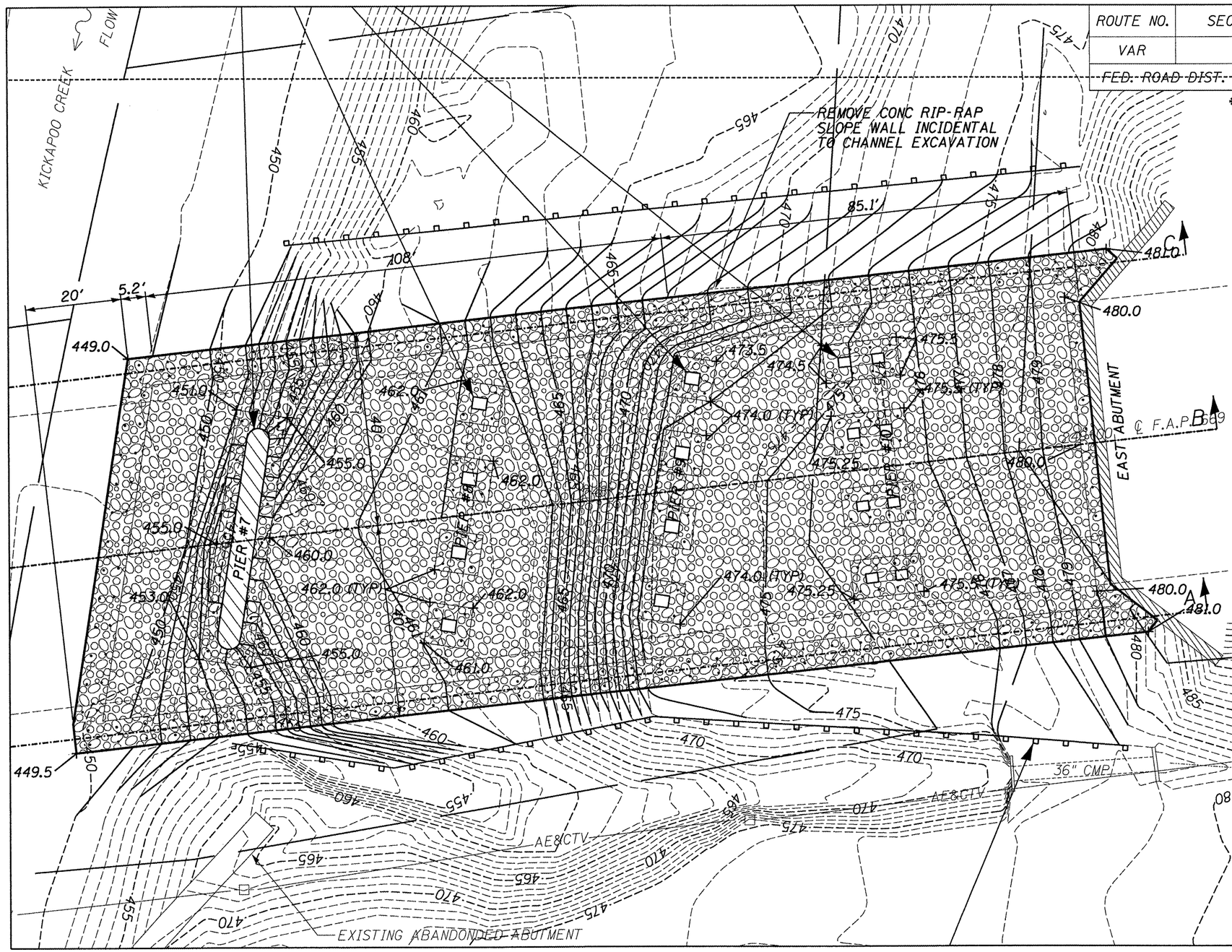

* D4 SCOUR MITIGATION 2006

LEGEND

EXISTING CONTOUR	495
PROPOSED CONTOUR	495
PROP SPOT ELEVATION	480.5
CONCRETE ABUTMENT	
STONE RIPRAP CL A5	
PERIMETER EROSION CONTROL BARRIER	
UTILITY POLE	
AERIAL ELECTRIC	AE
CABLE TELEVISION	CTV

NOTE: ALL DIMENSIONS PARALLEL AND PERPENDICULAR TO FACE OF ABUTMENT.

N

0 20' 40'
1" = 20'

ILLINOIS DEPARTMENT OF TRANSPORTATION
SITE DETAIL EAST
S.N. 072-0037
F.A.P. 669 (IL RTE. 116) OVER
BN & CNW R.R., KICKAPOO CREEK
& CH 77 F.A. RTE. 669
PEORIA COUNTY
SCALE: 1" = 20'
SHEET 4 OF 15

MAURER ▲ STUTZ, INC.
ENGINEERS SURVEYORS

ROUTE NO.	SECTION	COUNTY	TOTAL SHEETS	SHEET NO.
VAR	*	VAR	66	46
FED. ROAD DIST. NO. 4	ILLINOIS	FED. AID PROJECT		

*** D4 SCOUR MITIGATION 2006**

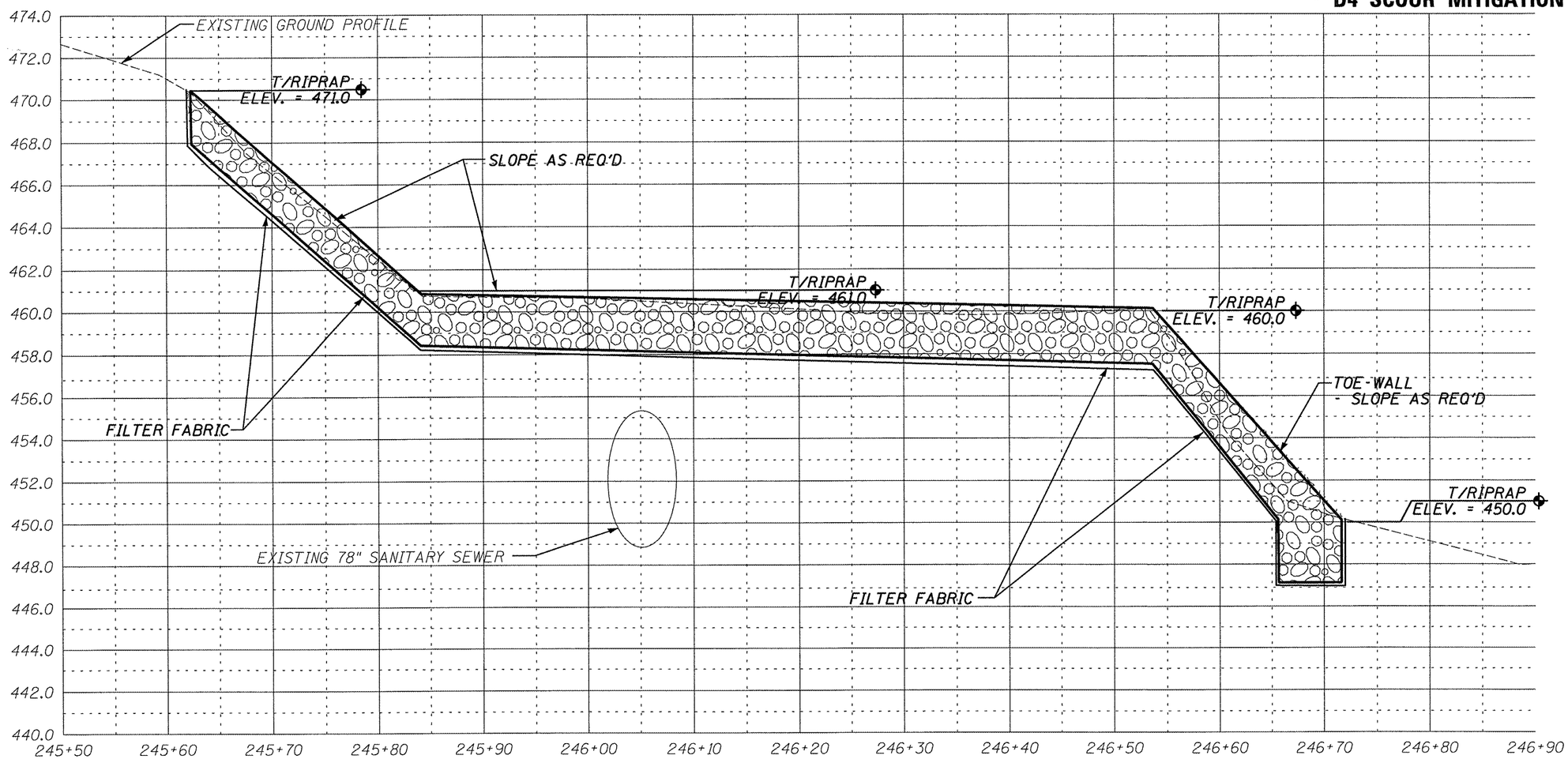

SECTION A-A THROUGH SOUTH END - WEST SECTION

ILLINOIS DEPARTMENT OF TRANSPORTATION
SITE CROSS SECTION
S.N. 072-0037
F.A.P. 669 (IL RTE. 116) OVER
BN & CNW R.R., KICKAPOO CREEK
& CH 77 F.A. RTE. 669
PEORIA COUNTY

SCALE: VERT. 1" = 5' HORIZ. 1" = 10'

SHEET 5 OF 15

MAURER STUTZ, INC.
ENGINEERS SURVEYORS

ROUTE NO.	SECTION	COUNTY	TOTAL SHEETS	SHEET NO.
VAR	*	VAR	66	47
FED. ROAD DIST. NO. 4		ILLINOIS	FED. AID PROJECT	

*** D4 SCOUR MITIGATION 2006**

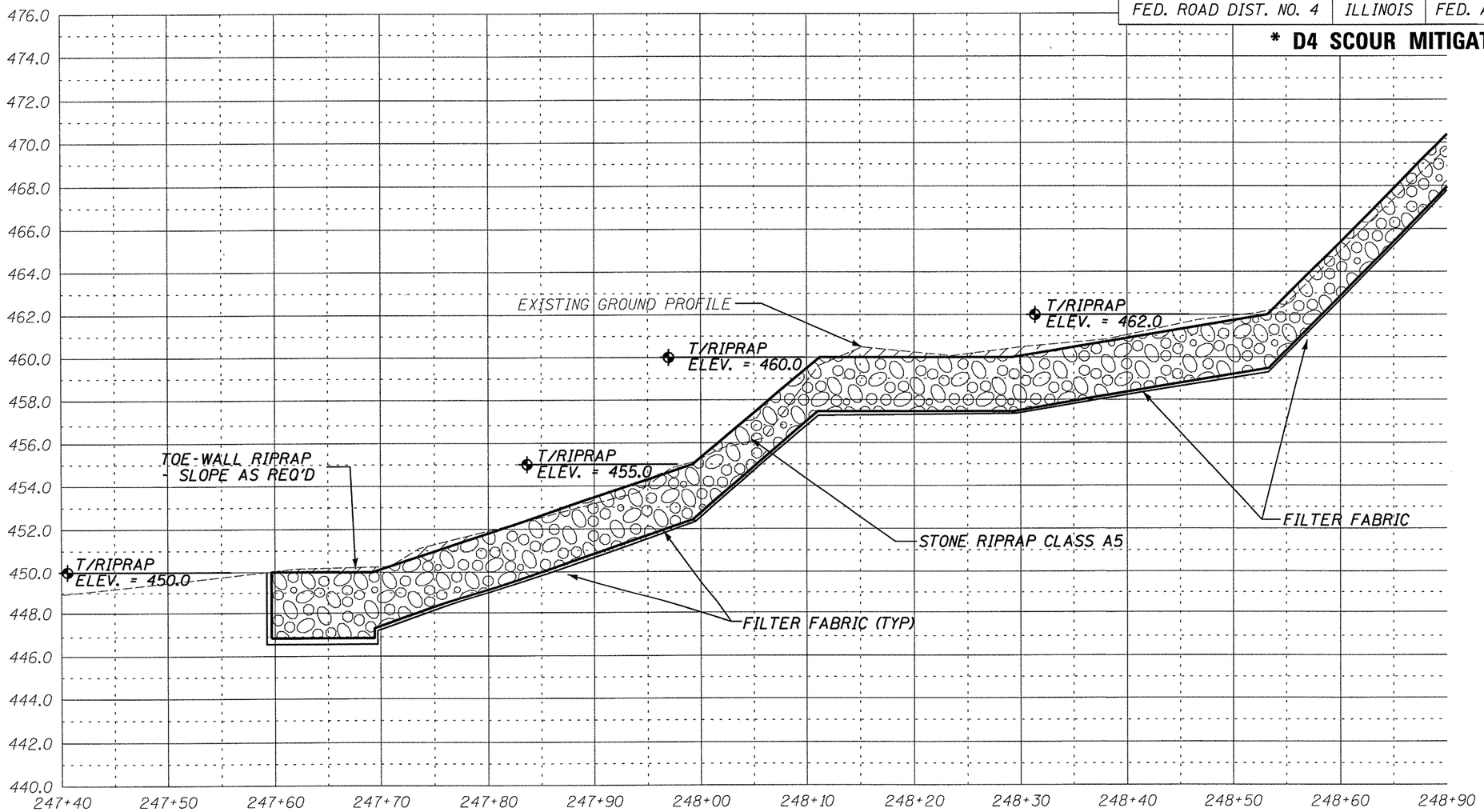

SECTION A-A THROUGH SOUTH END - CENTER SECTION

ILLINOIS DEPARTMENT OF TRANSPORTATION
SITE CROSS SECTION
S.N. 072-0037
F.A.P. 669 (IL RTE. 116) OVER
BN & CNW R.R., KICKAPOO CREEK
& CH 77 F.A. RTE. 669
PEORIA COUNTY

SCALE: VERT. 1" = 5' HORIZ. 1" = 10'

SHEET 6 OF 15

MAURER & STUTZ, INC.
ENGINEERS SURVEYORS

ROUTE NO.	SECTION	COUNTY	TOTAL SHEETS	SHEET NO.
VAR	*	VAR	66	48
FED. ROAD DIST. NO. 4		ILLINOIS	FED. AID PROJECT	

*** D4 SCOUR MITIGATION 2006**

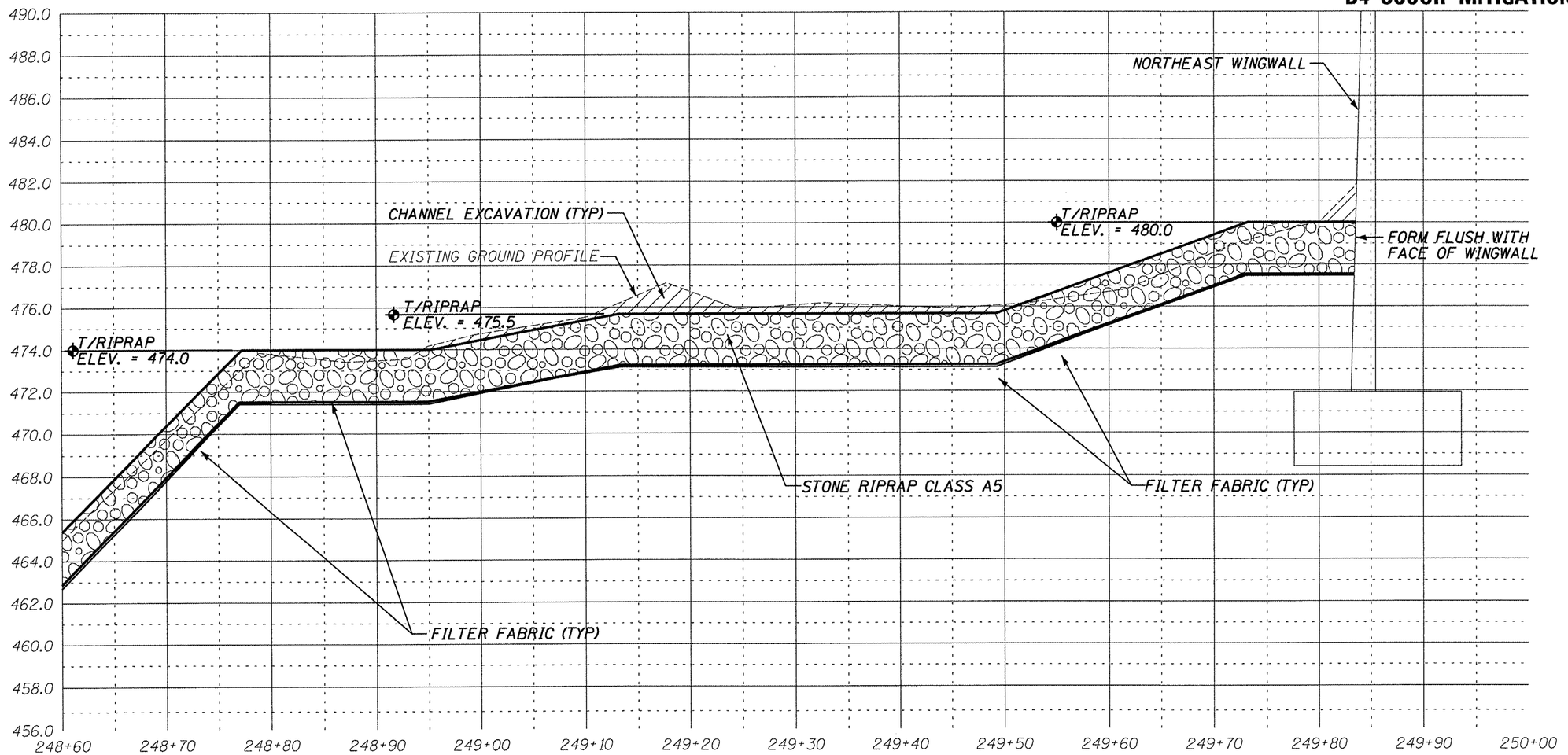

SECTION A-A THROUGH SOUTH END - EAST SECTION

ILLINOIS DEPARTMENT OF TRANSPORTATION
SITE CROSS SECTION
S.N. 072-0037
F.A.P. 669 (IL RTE. 116) OVER
BN & CNW R.R., KICKAPOO CREEK
& CH 77 F.A. RTE. 669
PEORIA COUNTY

SCALE: VERT. 1" = 5' HORIZ. 1" = 10'

SHEET 7 OF 15

MAURER ▲ STUTZ, INC.
ENGINEERS SURVEYORS

ROUTE NO.	SECTION	COUNTY	TOTAL SHEETS	SHEET NO.
VAR	*	VAR	66	49
FED. ROAD DIST. NO. 4	ILLINOIS	FED. AID PROJECT		

* D4 SCOUR MITIGATION 2006

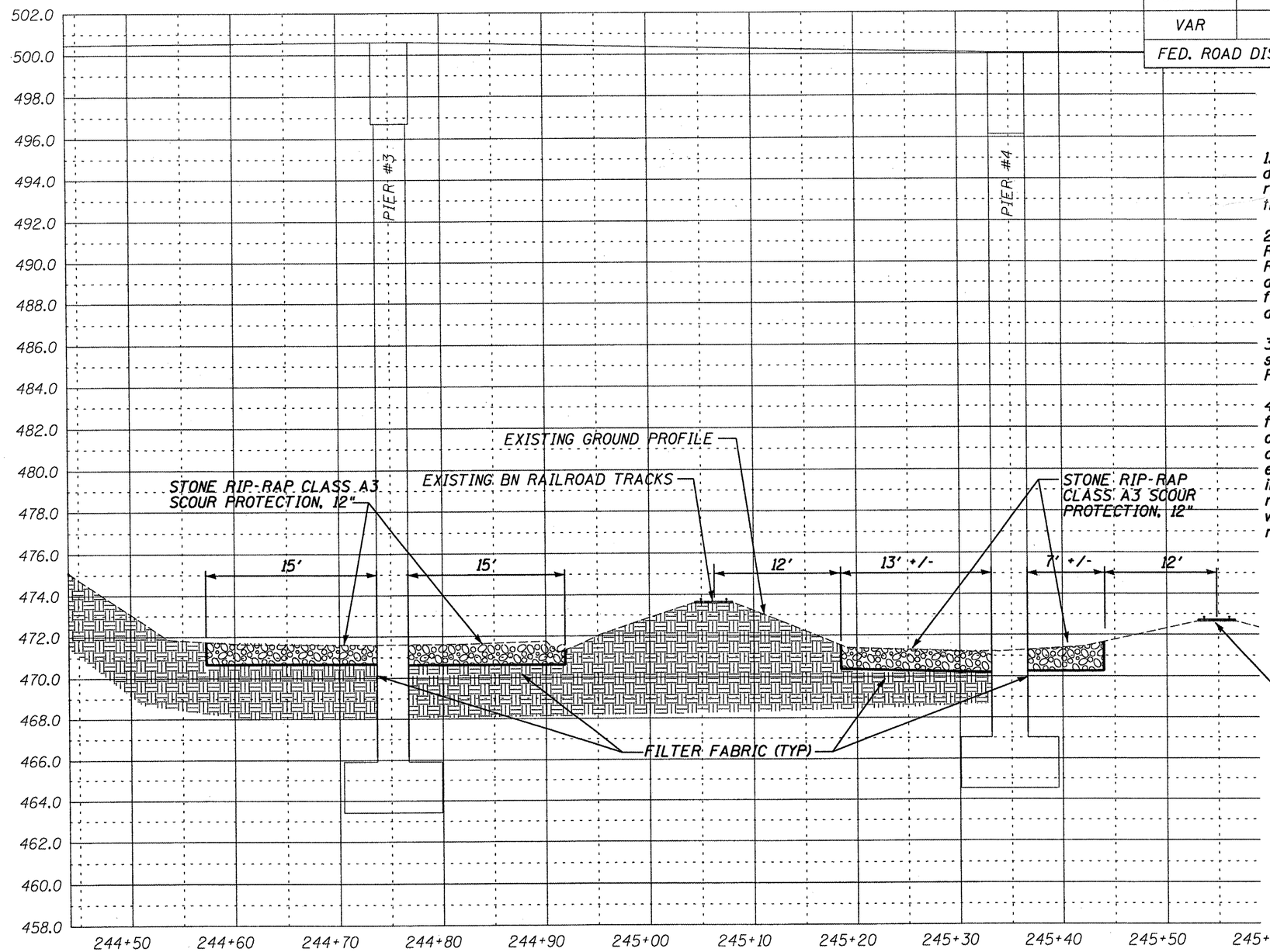

NOTES:

1. Railroad's review and approval of shoring, demolition, erection, and falsework are required and allow minimum of four weeks for the review and approval of each submittal.

2. Any shoring system that impacts the Railroad's operation and/or supports the Railroad's embankment shall be designed and constructed per Railroad Guidelines for Temporary Shoring. Railroad review and approval of shoring is required.

3. All excavation shall be sloped and/or shored per UPRR General Shoring Requirements.

4. Minimum Construction Clearance of 12 feet horizontal at right angle from centerline of track shall be maintained at all time during construction and all work such as excavation of existing embankment and installation of proposed riprap within the railroad right of way must be coordinated with the railroad and executed per railroad requirements.

ILLINOIS DEPARTMENT OF TRANSPORTATION
SITE CROSS SECTION
S.N. 072-0037
F.A.P. 669 (IL RTE. 116) OVER
BN & CNW R.R., KICKAPOO CREEK
& CH 77 F.A. RTE. 669
PEORIA COUNTY

SCALE: VERT. 1" = 5' HORIZ. 1" = 10'

SHEET 8 OF 15

MAURER & STUTZ, INC.
ENGINEERS SURVEYORS

ROUTE NO.	SECTION	COUNTY	TOTAL SHEETS	SHEET NO.
VAR	*	VAR	66	50
FED. ROAD DIST. NO. 4	ILLINOIS	FED. AID PROJECT		

*** D4 SCOUR MITIGATION 2006**

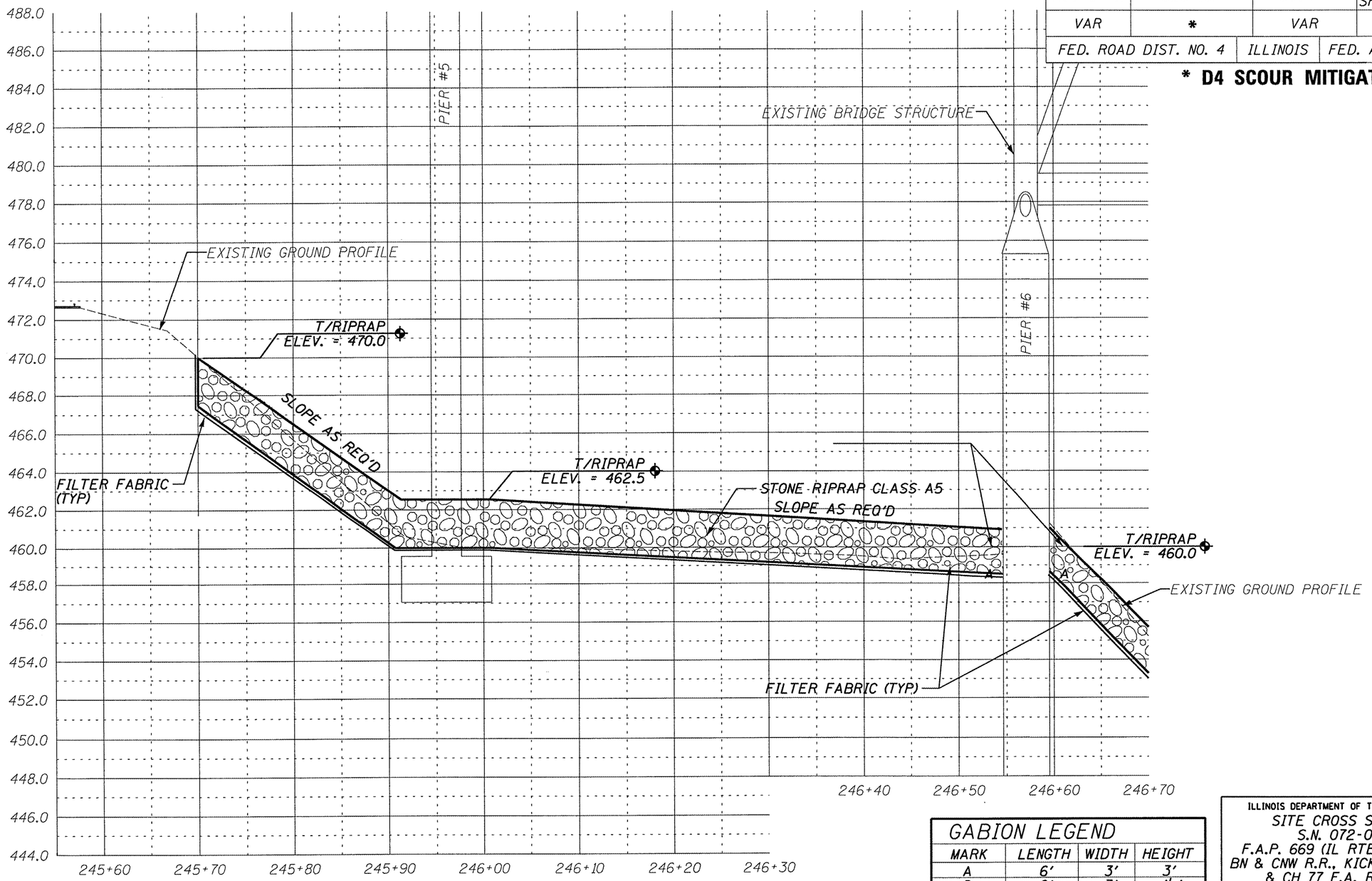

GABION LEGEND			
MARK	LENGTH	WIDTH	HEIGHT
A	6'	3'	3'
D	6'	3'	1½'

ILLINOIS DEPARTMENT OF TRANSPORTATION

SITE CROSS SECTION
S.N. 072-0037
F.A.P. 669 (IL RTE. 116) OVER
BN & CNW R.R., KICKAPOO CREEK
& CH 77 F.A. RTE. 669
PEORIA COUNTY

SCALE: VERT. 1" = 5' HORIZ. 1" = 10'

SHEET 9 OF 15

MAURER ▲ STUTZ, INC.
ENGINEERS SURVEYORS

ROUTE NO.	SECTION	COUNTY	TOTAL SHEETS	SHEET NO.
VAR	*	VAR	66	51
FED. ROAD DIST. NO. 4		ILLINOIS	FED. AID PROJECT	

*** D4 SCOUR MITIGATION 2006**

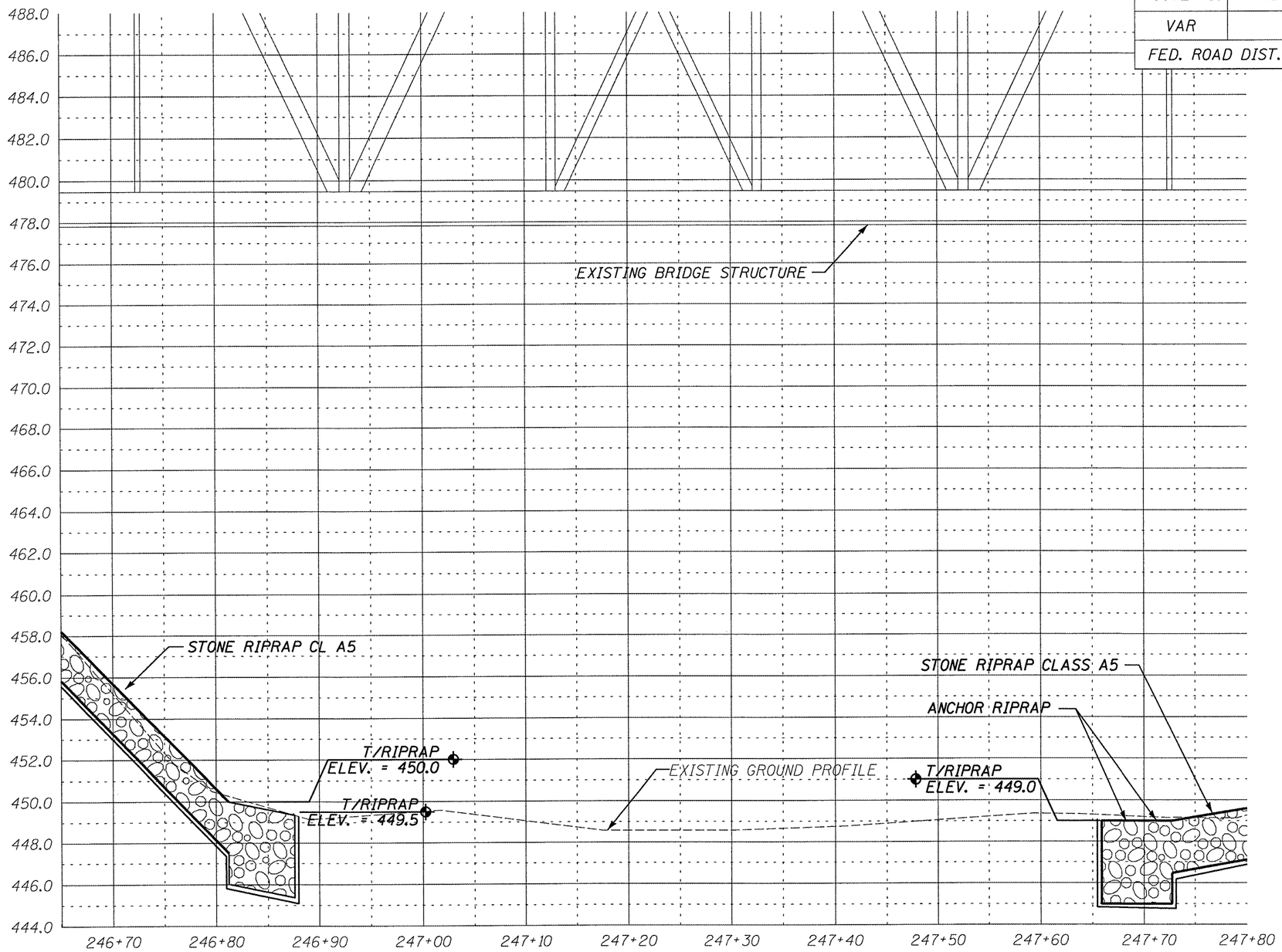

ILLINOIS DEPARTMENT OF TRANSPORTATION

SITE CROSS SECTION
S.N. 072-0037
F.A.P. 669 (IL RTE. 116) OVER
BN & CNW R.R., KICKAPOO CREEK
& CH 77 F.A. RTE. 669
PEORIA COUNTY

SCALE: VERT. 1" = 5' HORIZ. 1" = 10'

SHEET 10 OF 15

MAURER & STUTZ, INC.
ENGINEERS SURVEYORS

ROUTE NO.	SECTION	COUNTY	TOTAL SHEETS	SHEET NO.
VAR	*	VAR	66	52
FED. ROAD DIST. NO. 4	ILLINOIS	FED. AID PROJECT		

*** D4 SCOUR MITIGATION 2006**

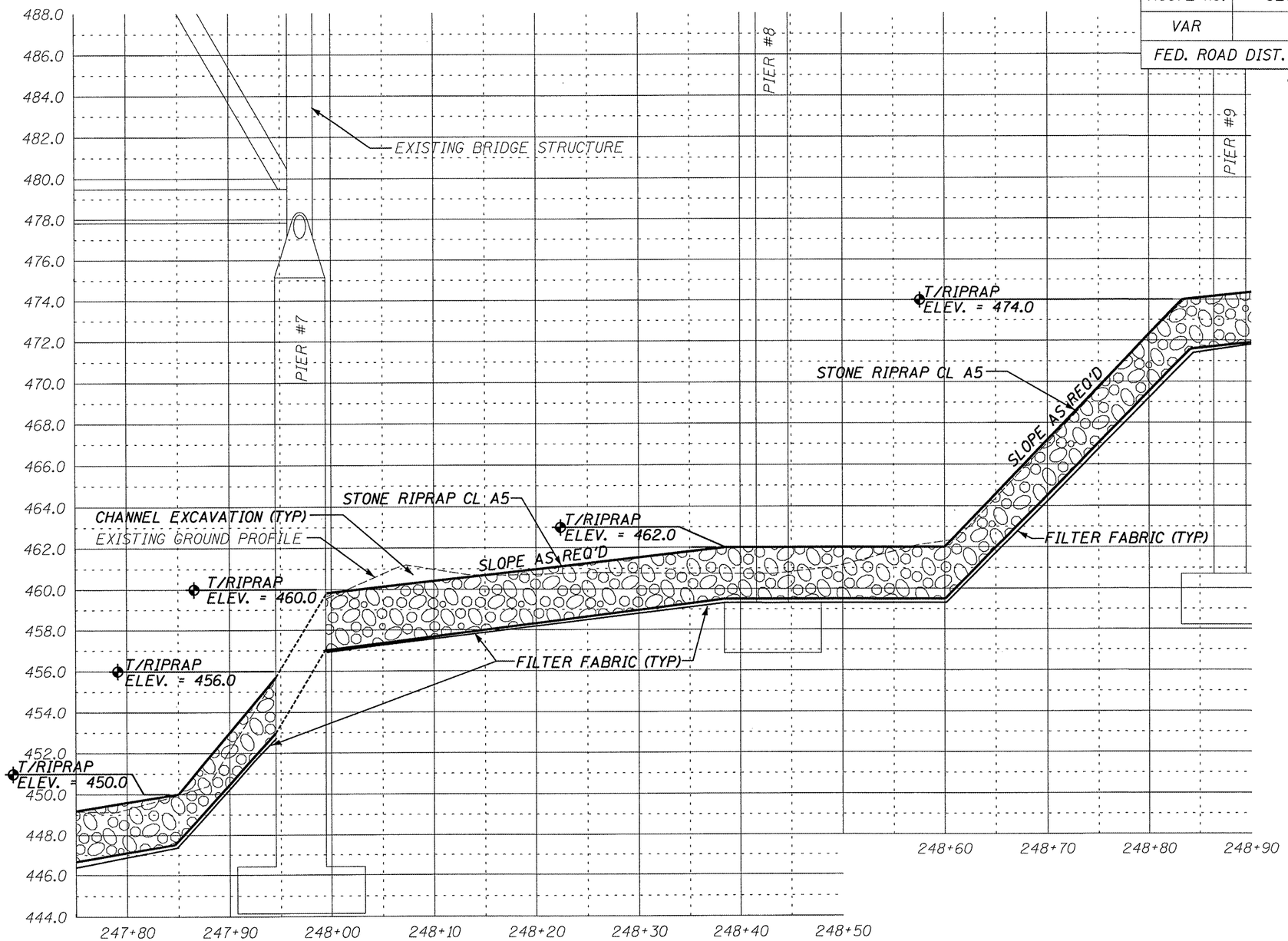

ILLINOIS DEPARTMENT OF TRANSPORTATION

SITE CROSS SECTION
S.N. 072-0037
F.A.P. 669 (IL RTE. 116) OVER
BN & CNW R.R., KICKAPOO CREEK
& CH 77 F.A. RTE. 669
PEORIA COUNTY

SCALE: VERT. 1" = 5' HORIZ. 1" = 10'

SHEET 11 OF 15

MAURER & STUTZ, INC.
ENGINEERS SURVEYORS

ROUTE NO.	SECTION	COUNTY	TOTAL SHEETS	SHEET NO.
VAR	*	VAR	66	53
FED. ROAD DIST. NO. 4	ILLINOIS	FED. AID PROJECT		

*** D4 SCOUR MITIGATION 2006**

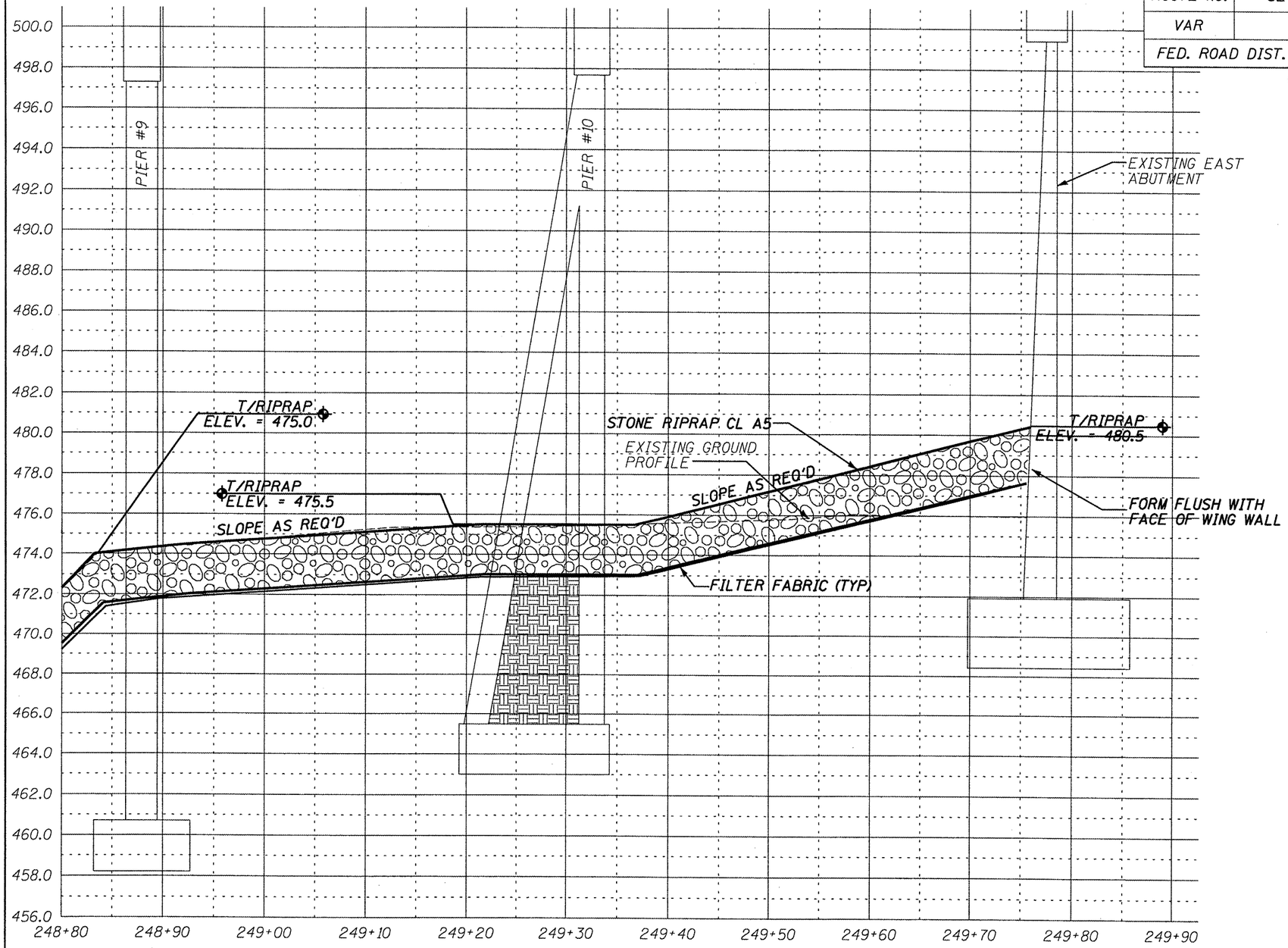

ILLINOIS DEPARTMENT OF TRANSPORTATION

SITE CROSS SECTION
S.N. 072-0037
F.A.P. 669 (IL RTE. 116) OVER
BN & CNW R.R., KICKAPOO CREEK
& CH 77 F.A. RTE. 669
PEORIA COUNTY

SCALE: VERT. 1" = 5' HORIZ. 1" = 10'

SHEET 12 OF 15

MAURER & STUTZ, INC.
ENGINEERS SURVEYORS

ROUTE NO.	SECTION	COUNTY	TOTAL SHEETS	SHEET NO.
VAR	*	VAR	66	54
FED. ROAD DIST. NO. 4		ILLINOIS	FED. AID PROJECT	

*** D4 SCOUR MITIGATION 2006**

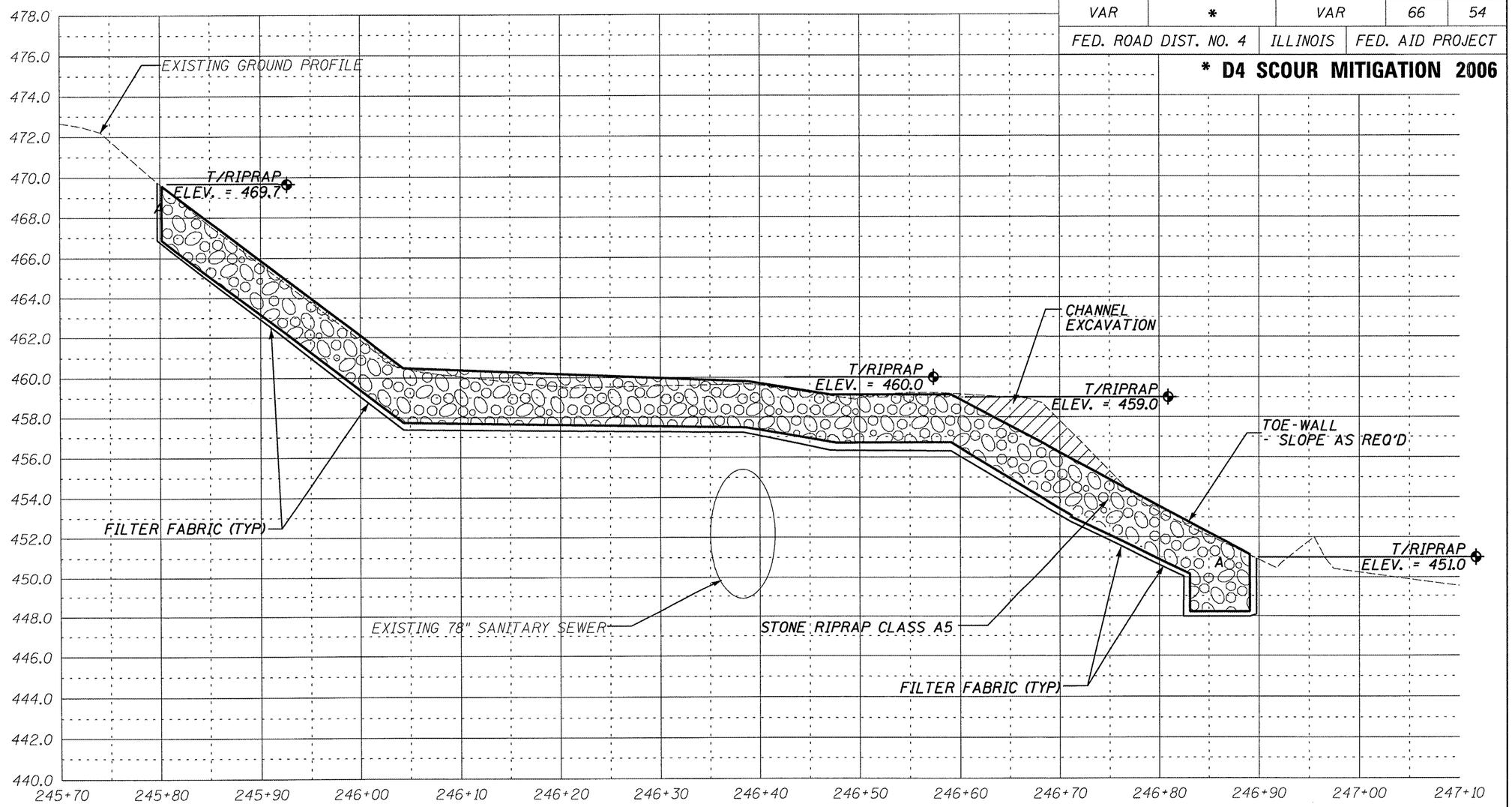

SECTION C-C THROUGH NORTH END - WEST SECTION

ILLINOIS DEPARTMENT OF TRANSPORTATION
SITE CROSS SECTION
S.N. 072-0037
F.A.P. 669 (IL RTE. 116) OVER
BN & CNW R.R., KICKAPOO CREEK
& CH 77 F.A. RTE. 669
PEORIA COUNTY

SCALE: VERT. 1" = 5' HORIZ. 1" = 10' SHEET 13 OF 15

MAURER STUTZ, INC.
ENGINEERS SURVEYORS

ROUTE NO.	SECTION	COUNTY	TOTAL SHEETS	SHEET NO.
VAR	*	VAR	66	55
FED. ROAD DIST. NO. 4		ILLINOIS	FED. AID PROJECT	

*** D4 SCOUR MITIGATION 2006**

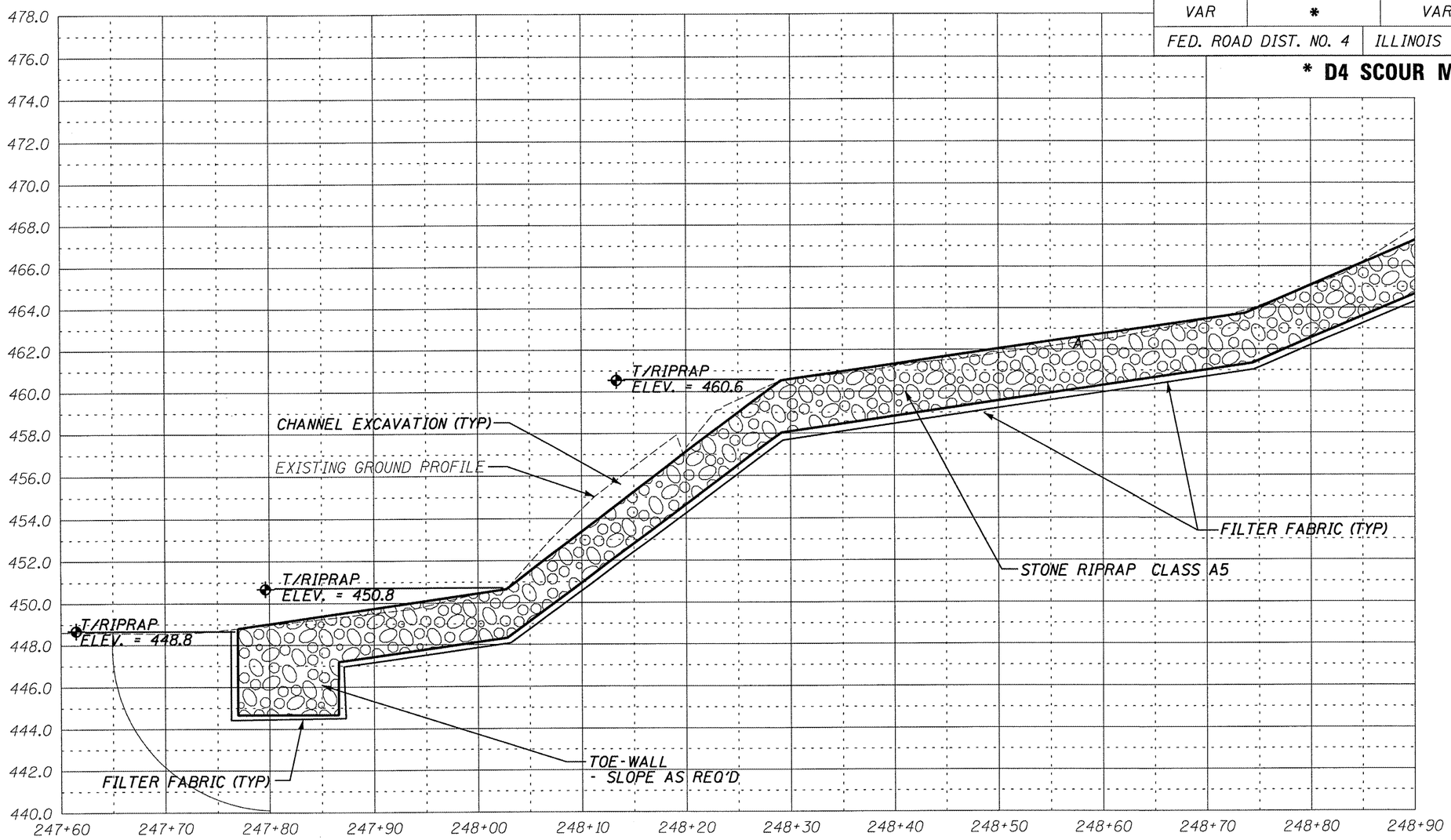

SECTION C-C THROUGH NORTH END - CENTER SECTION

ILLINOIS DEPARTMENT OF TRANSPORTATION
SITE CROSS SECTION
S.N. 072-0037
F.A.P. 669 (IL RTE. 116) OVER
BN & CNW R.R., KICKAPOO CREEK
& CH 77 F.A. RTE. 669
PEORIA COUNTY

SCALE: VERT. 1" = 5' HORIZ. 1" = 10'

SHEET 14 OF 15

MAURER & STUTZ, INC.
ENGINEERS SURVEYORS

ROUTE NO.	SECTION	COUNTY	TOTAL SHEETS	SHEET NO.
VAR	*	VAR	66	56
FED. ROAD DIST. NO. 4		ILLINOIS	FED. AID PROJECT	

*** D4 SCOUR MITIGATION 2006**

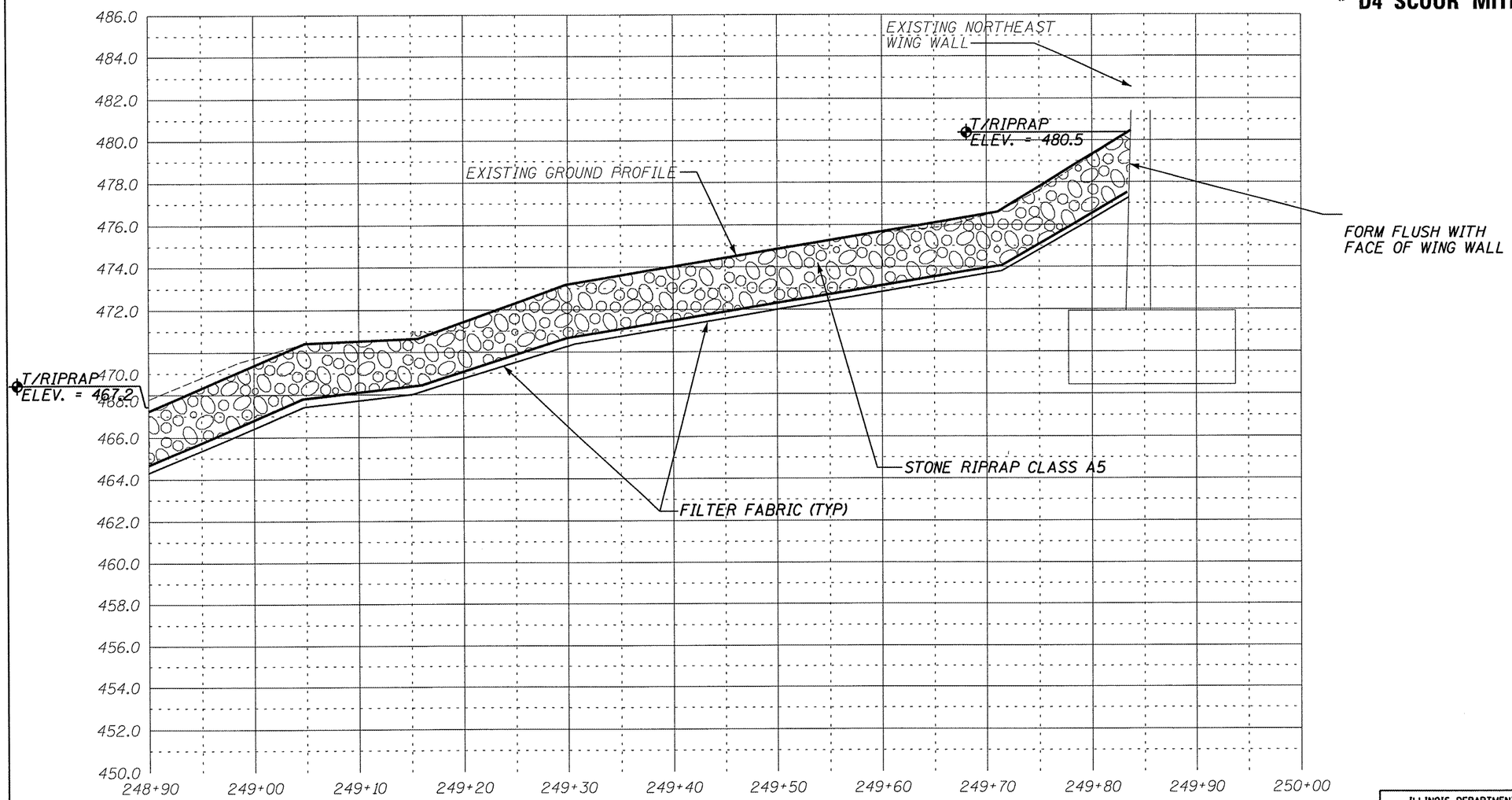

SECTION C-C THROUGH NORTH END - EAST SECTION

ILLINOIS DEPARTMENT OF TRANSPORTATION
SITE CROSS SECTION
S.N. 072-0037
F.A.P. 669 (IL RTE. 116) OVER
BN & CNW R.R., KICKAPOO CREEK
& CH 77 F.A. RTE. 669
PEORIA COUNTY

SCALE: VERT. 1" = 5' HORIZ. 1" = 10'

SHEET 15 OF 15

MAURER ▲ STUTZ, INC.
ENGINEERS SURVEYORS

BENCHMARK: CHISLED "□" ON WINGWALL CORNER
ELEVATION = 502.38

EXISTING STRUCTURE: SN 078-0005 IS A 44'-4" WIDE BY 30'-2½" LONG SUPERSTRUCTURE WITH A TWO-WAY REINFORCED CONCRETE SLAB ON R.C. CLOSED ABUTMENTS.

ROUTE NO.	SECTION	COUNTY	TOTAL SHEETS	SHEET NO.
VAR	*	VAR	66	57
FED. ROAD DIST. NO. 4	ILLINOIS	FED. AID PROJECT		

* D4 SCOUR MITIGATION 2006

INDEX OF SHEETS

SHEET NUMBER	DESCRIPTION
1	GENERAL PLAN AND ELEVATION, SUMMARY OF QUANTITIES, LOCATION MAP
2	R.O.W. PLAN
3	SITE PLAN
4	SITE PROFILE
5-7	SITE CROSS SECTIONS

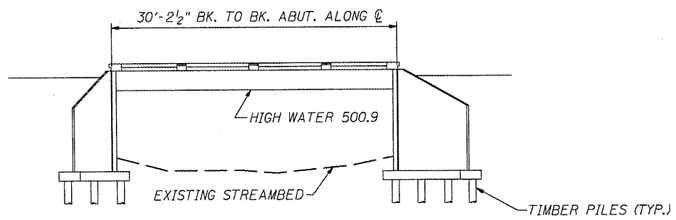

ELEVATION

BILL OF MATERIALS

ITEM	UNIT	TOTAL
CHANNEL EXCAVATION	CU YD	20
STONE RIP-RAP, CLASS A5	TONS	867
FILTER FABRIC	SQ YD	700
DEWATERING STRUCTURE NO. 6	EACH	1

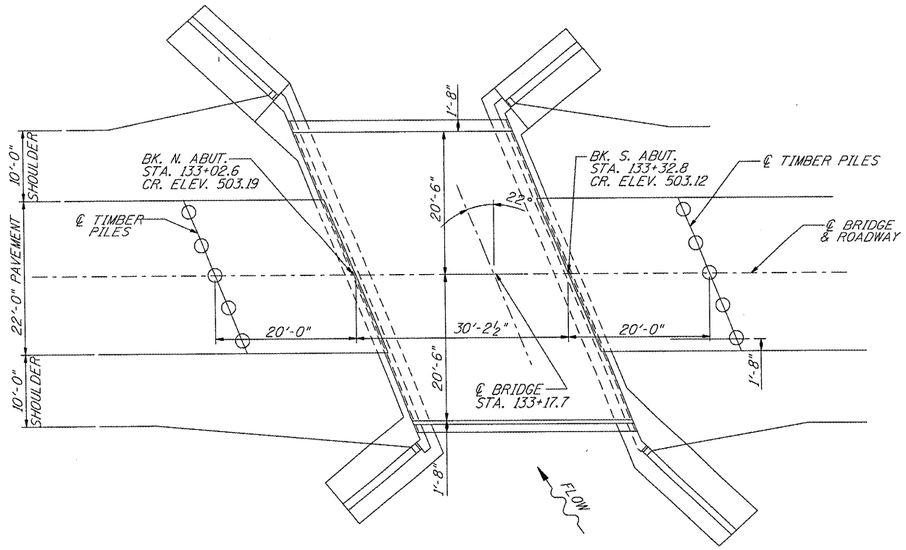

PLAN
EXISTING BRIDGE

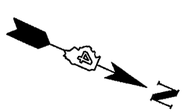

DAVID L. MAURER
062-030577
LICENSED PROFESSIONAL ENGINEER OF ILLINOIS

David L. Maurer, P.E.
Exp. Date 11/2009
P.E. No.: 062-030577

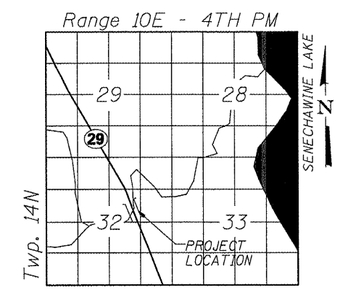

LOCATION SKETCH

WATERWAY/SCOUR INFORMATION

DESIGN FLOOD	100 YRS
DRAINAGE AREA	5.5 SQ MI
FLOW	2,520 CFS
FLOW DEPTH	12.9 FT
REQUIRED OPENING	229 SQ FT
PROVIDED OPENING	300 SQ FT
CONTRACTION SCOUR DEPTH	96 FT

ILLINOIS DEPARTMENT OF TRANSPORTATION

GENERAL PLAN & ELEVATION
S.N. 078-0005
F.A.P. 318 (IL 29)
OVER ILL. RIVER TRIBUTARY
PUTNAM COUNTY

SHEET 1 OF 7

MAURER STUTZ, INC.
ENGINEERS SURVEYORS

ROUTE NO.	SECTION	COUNTY	TOTAL SHEETS	SHEET NO.
VAR	*	VAR	66	58
FED. ROAD DIST. NO. 4		ILLINOIS	FED. AID PROJECT	

*** D4 SCOUR MITIGATION 2006**

LEGEND

- R.O.W.
- PROPOSED R.O.W. LINE
- CONSTRUCTION LIMITS
- CONCRETE ABUTMENT
- STREAM CENTERLINE
- RIPRAP
- AERIAL ELECTRIC — AE —

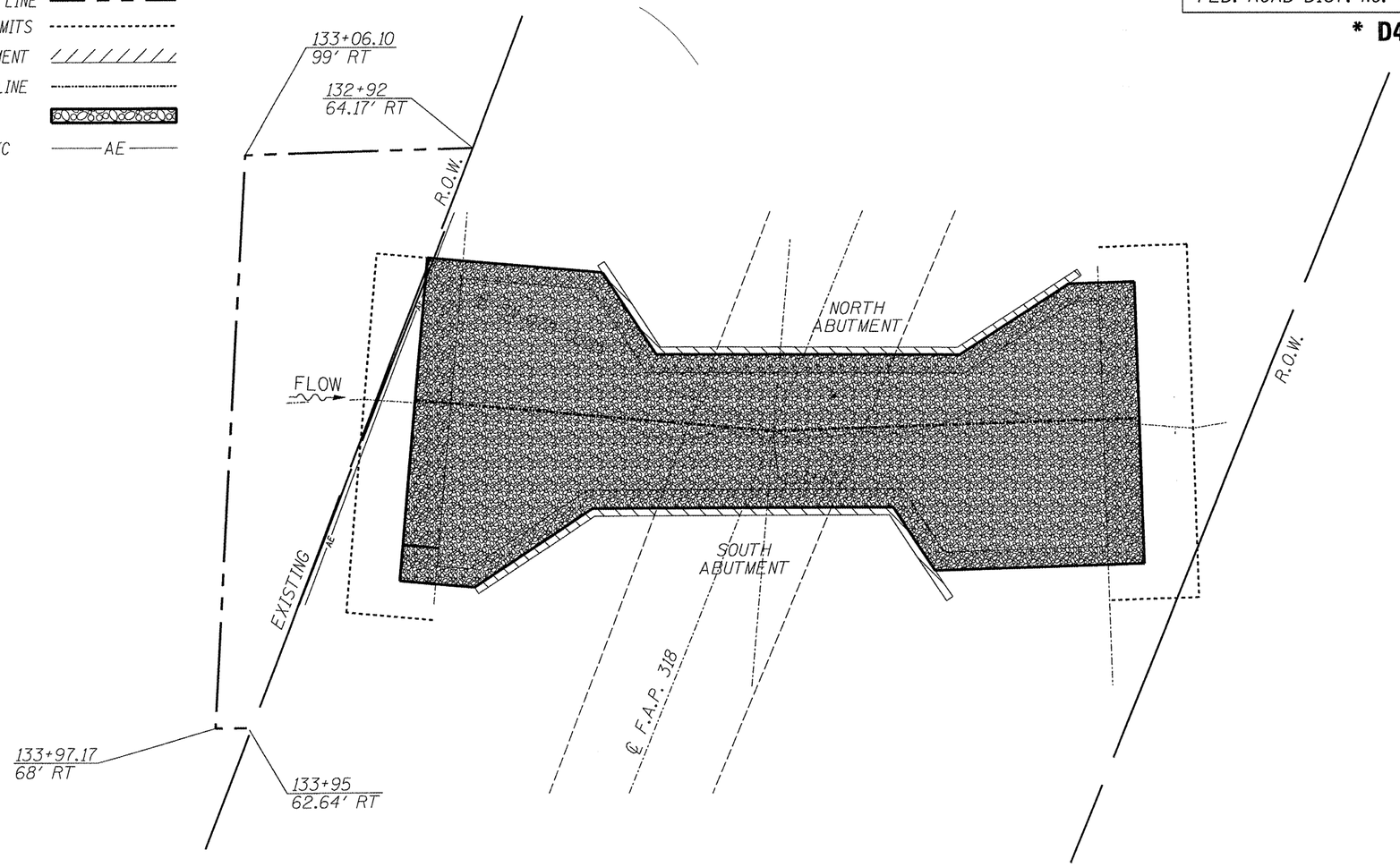

0 20' 40'
1" = 20'

N

ILLINOIS DEPARTMENT OF TRANSPORTATION

R.O.W. PLAN
S.N. 078-0005
F.AP. 318 (IL 29)
OVER ILL. RIVER TRIBUTARY
PUTNAM COUNTY

SCALE: 1" = 20'

SHEET 2 OF 7

MAURER & STUTZ, INC.
ENGINEERS SURVEYORS

ROUTE NO.	SECTION	COUNTY	TOTAL SHEETS	SHEET NO.
VAR	*	VAR	66	59
FED. ROAD DIST. NO. 4		ILLINOIS	FED. AID PROJECT	

* D4 SCOUR MITIGATION 2006

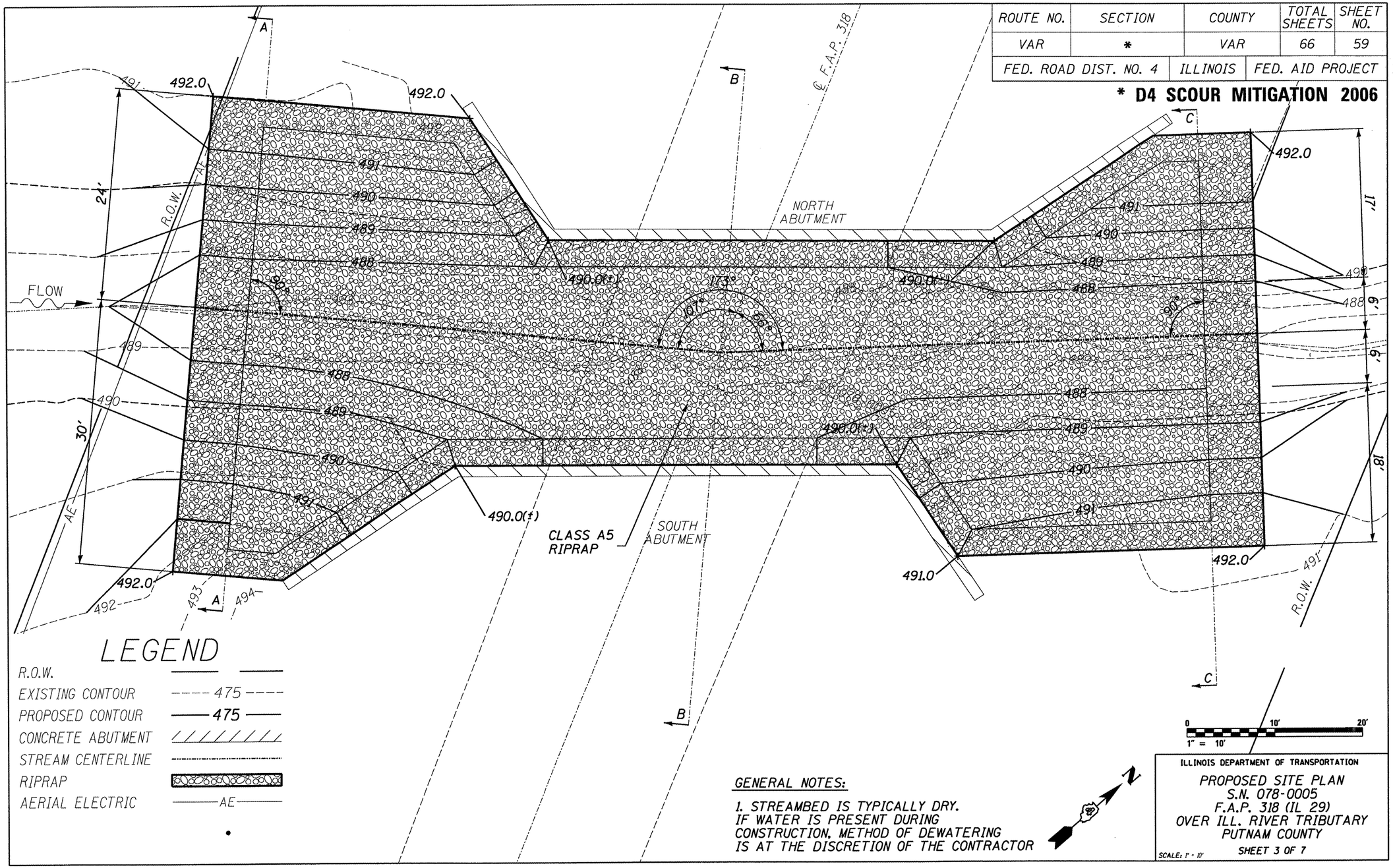

ROUTE NO.	SECTION	COUNTY	TOTAL SHEETS	SHEET NO.
VAR	*	VAR	66	60
FED. ROAD DIST. NO. 4	ILLINOIS	FED. AID PROJECT		

*** D4 SCOUR MITIGATION 2006**

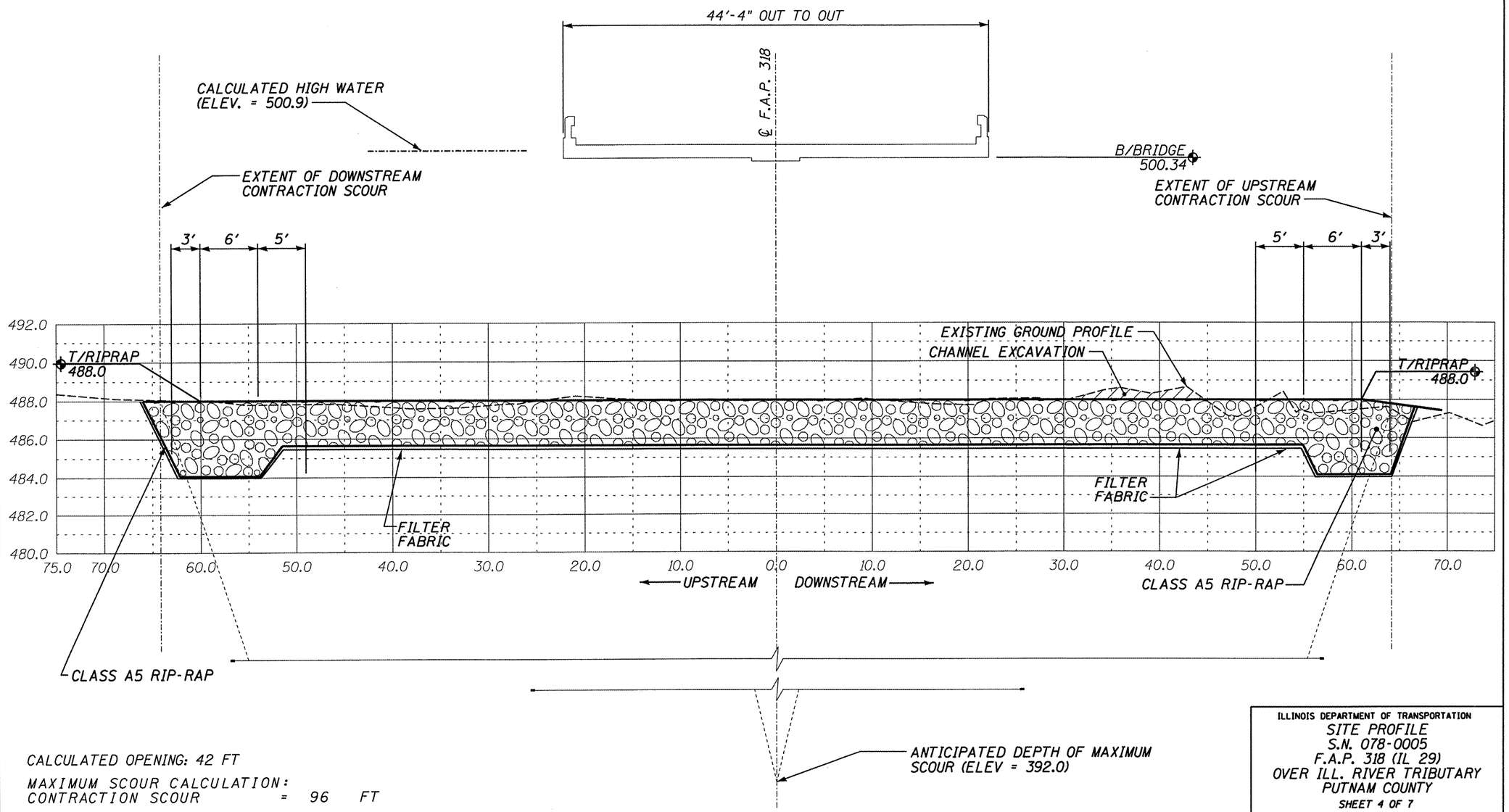

CALCULATED OPENING: 42 FT

MAXIMUM SCOUR CALCULATION:
CONTRACTION SCOUR = 96 FT

ILLINOIS DEPARTMENT OF TRANSPORTATION
SITE PROFILE
S.N. 078-0005
F.A.P. 318 (IL 29)
OVER ILL. RIVER TRIBUTARY
PUTNAM COUNTY
SHEET 4 OF 7
SCALE: VERT. 1" = 5' HORIZ. 1" = 10'

MAURER & STUTZ, INC.
ENGINEERS SURVEYORS

ROUTE NO.	SECTION	COUNTY	TOTAL SHEETS	SHEET NO.
VAR	*	VAR	66	61
FED. ROAD DIST. NO. 4		ILLINOIS	FED. AID PROJECT	

*** D4 SCOUR MITIGATION 2006**

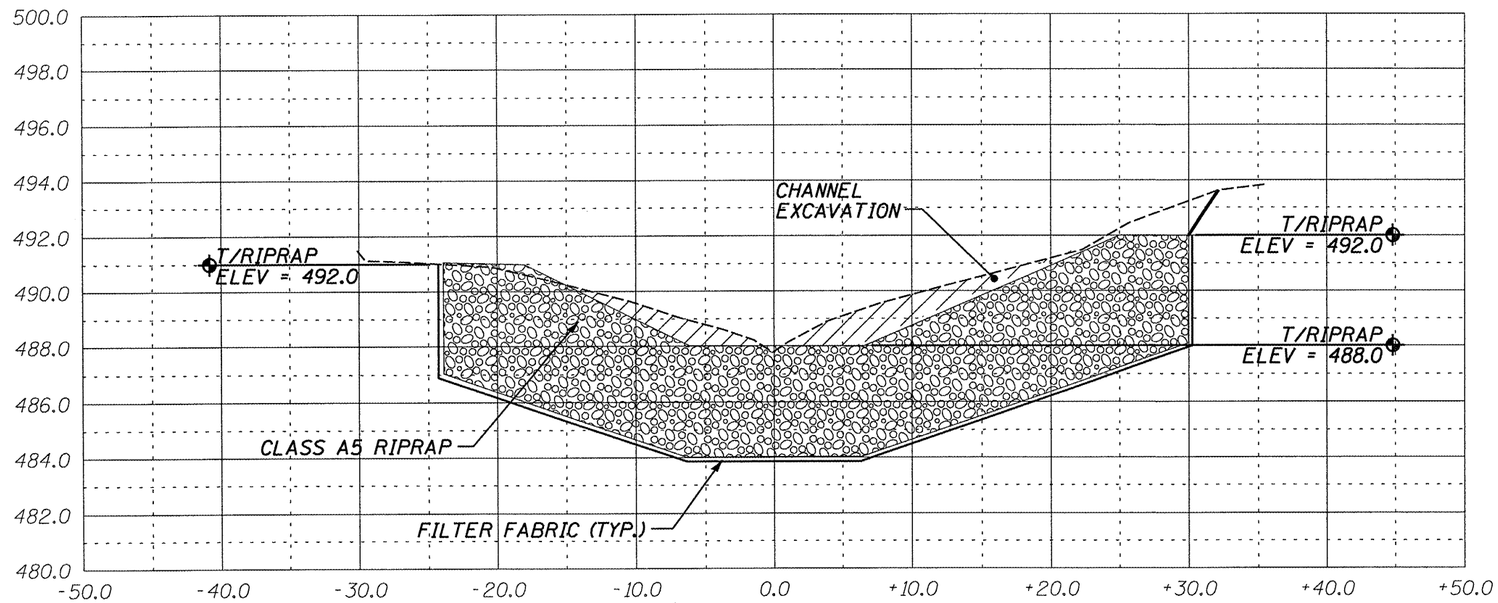

SECTION A-A

ILLINOIS DEPARTMENT OF TRANSPORTATION

SITE CROSS SECTION
S.N. 078-0005
F.A.P. 318 (IL 29)
OVER ILL. RIVER TRIBUTARY
PUTNAM COUNTY

SHEET 5 OF 7

SCALE: VERT. 1" = 5' HORIZ. 1" = 10'

MAURER & STUTZ, INC.
ENGINEERS SURVEYORS

ROUTE NO.	SECTION	COUNTY	TOTAL SHEETS	SHEET NO.
VAR	*	VAR	66	62
FED. ROAD DIST. NO. 4		ILLINOIS	FED. AID PROJECT	

*** D4 SCOUR MITIGATION 2006**

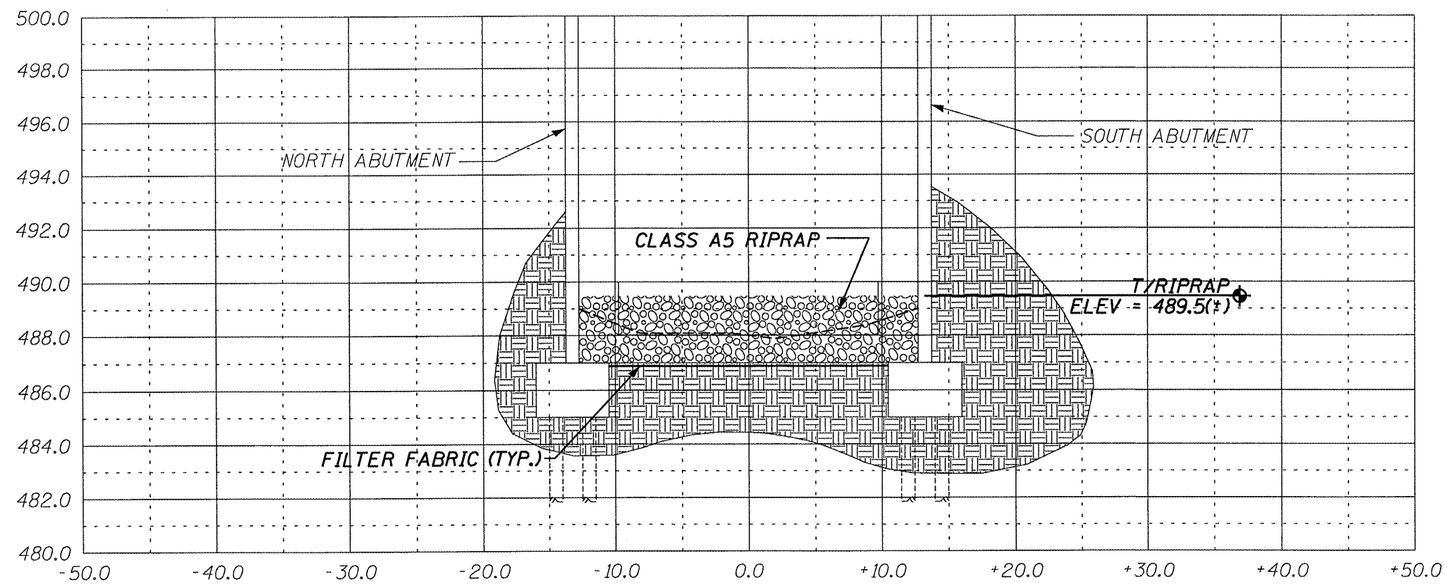

SECTION B-B THROUGH ℄ S.B.I. ROUTE 29

ILLINOIS DEPARTMENT OF TRANSPORTATION

SITE CROSS SECTION
S.N. 078-0005
F.A.P. 318 (IL 29)
OVER ILL. RIVER TRIBUTARY
PUTNAM COUNTY

SHEET 6 OF 7

SCALE: VERT. 1" = 5' HORIZ. 1" = 10'

MAURER ▲ STUTZ, INC.
ENGINEERS SURVEYORS

ROUTE NO.	SECTION	COUNTY	TOTAL SHEETS	SHEET NO.
VAR	*	VAR	66	63
FED. ROAD DIST. NO. 4		ILLINOIS	FED. AID PROJECT	

*** D4 SCOUR MITIGATION 2006**

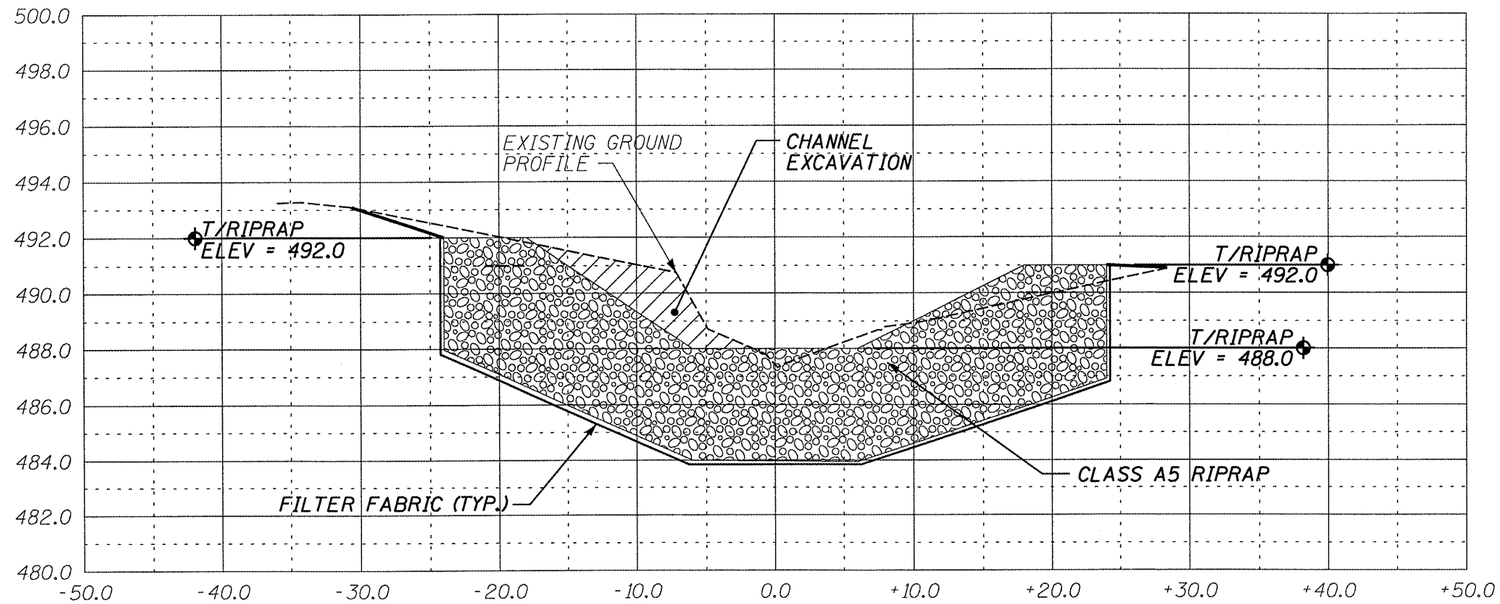

SECTION C-C

ILLINOIS DEPARTMENT OF TRANSPORTATION
SITE CROSS SECTION
S.N. 078-0005
F.A.P. 318 (IL 29)
OVER ILL. RIVER TRIBUTARY
PUTNAM COUNTY
SHEET 7 OF 7
SCALE: VERT. 1" = 5' HORIZ. 1" = 10'

MAURER & STUTZ, INC.
ENGINEERS SURVEYORS

ROUTE NO.	SECTION	COUNTY	TOTAL SHEETS	SHEET NO.
VAR	*	VAR	66	64
FED. ROAD DIST. NO. 4		ILLINOIS	FED. AID PROJECT	

*** D4 SCOUR MITIGATION 2006**

SUGGESTED INSTALLATION SEQUENCE

(SEE ALSO SECTION 284 OF THE STANDARD SPECIFICATIONS)

1. INDIVIDUALLY ASSEMBLE THE EMPTY GABION BASKET UNITS.
2. POSITION THE INITIAL LINE OF EMPTY GABION BASKET UNITS ON THE PREPARED SURFACE IN A DIRECTION PERPENDICULAR TO STREAM FLOW. SECURE ADJOINING BASKETS AND PARTIALLY FILL TO PROVIDE ANCHORAGE AGAINST DEFORMATION AND DISPLACEMENT DURING FILLING OPERATIONS.
3. POSITION AND SECURE THE REMAINING EMPTY GABION BASKET UNITS ON THE PREPARED SURFACE AS SHOWN ON THE PLANS.
4. PLACE THE BASKETS IN TENSION AND STRETCH TO REMOVE ANY KINKS FROM THE FABRIC. STRETCH THE EMPTY GABION BASKET UNITS IN A MANNER THAT WILL PREVENT UNRAVELING.
5. FILL THE BASKET UNITS IN STAGES TO PREVENT LOCALIZED DEFORMATION. INTERNAL CONNECTING WIRES SHALL BE INSTALLED BETWEEN STONE LAYERS TO CONNECT THE FRONT FACE OF THE BASKET UNIT TO THE BACK FACE. AT NO TIME SHALL ANY CELL BE FILLED TO A DEPTH EXCEEDING 12 INCHES MORE THAN THE ADJOINING CELL. THE MAXIMUM HEIGHT FROM WHICH THE STONE MAY BE DROPPED INTO THE BASKET SHALL BE 3 FT.
6. TIGHTLY STRETCH THE LID OVER THE STONE FILL USING A LID CLOSING TOOL APPROVED BY THE MANUFACTURER. USING CROWBARS OR OTHER SINGLE POINT LEVERAGE BARS FOR LID CLOSING SHALL BE PROHIBITED. TIGHTLY SECURE THE LID TO THE FILLED BASKET ALONG ALL EDGES, ENDS AND INTERNAL CELL DIAPHRAMS.
7. IN LIEU OF FILLING BASKETS IN PLACE, THE BASKETS MAY BE PREFILLED ON A LEVEL SURFACE AS INDICATED IN STEPS 5 AND 6. THE BASKETS CAN THEN BE LIFTED AND PLACED ON THE PREPARED SURFACE USING A MANUFACTURER'S APPROVED LIFTING TECHNIQUE. CARE SHALL BE TAKEN NOT TO ABRADE THE ZINC OR VINYL COATING OR PERMANENTLY DISTORT THE SHAPE OF THE BASKET IN TRANSPORTATION. ANY DAMAGE TO THE BASKETS SHALL BE REPAIRED AT THE CONTRACTOR'S EXPENSE TO THE SATISFACTION OF THE ENGINEER. BASKETS SHALL BE PLACED TIGHTLY AGAINST AND SECURED TO BASKETS ALREADY IN PLACE.
8. WHERE A COMPLETE GABION UNIT CANNOT BE INSTALLED AS SHOWN ON THE PLANS BECAUSE OF SPACE LIMITATIONS, THE BASKET UNIT SHALL BE CUT, FOLDED AND WIRED TOGETHER TO SUIT EXISTING SITE CONDITIONS.

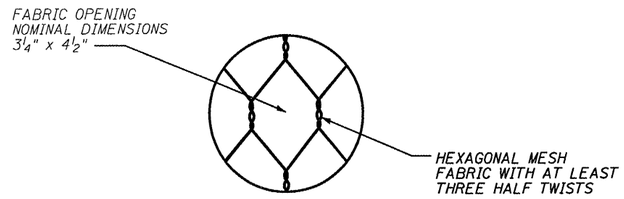

NOTES:
1. GABION BASKETS SHALL BE CONSTRUCTED OF A GALVANIZED, ALUMINIZED, OR PVC-COATED GALVANIZED OR ALUMINIZED STEEL WIRE.
2. STEEL WIRE SHALL CONFORM TO SECTION 1006.35 OF THE STANDARD SPECIFICATIONS

GABION FABRIC DETAIL

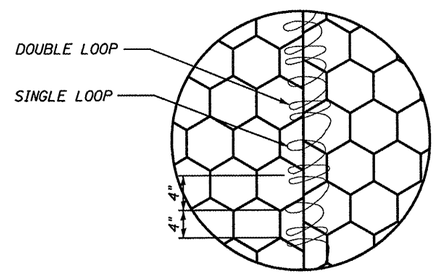

LACING DETAIL

GABION BASKET NOTES:
1. BASKETS SHALL BE OF SINGLE UNIT CONSTRUCTION. THE BASE, LID, ENDS AND SIDES SHALL BE EITHER WOVEN INTO A SINGLE UNIT OR ONE EDGE OF THESE MEMBERS CONNECTED TO THE BASE SECTION OF THE BASKETS. FOR PROPER ASSEMBLAGE, SEE LACING DETAIL.
2. DIAPHRAMS SHALL EQUALLY DIVIDE BASKETS WHERE THE LENGTH OF THE BASKET EXCEEDS 1½ IT'S HORIZONTAL LEGNTH.
3. GABION BASKET ASSEMBLAGE, INSTALLATION, FILLING AND LID-CLOSING SHALL BE IN ACCORDANCE WITH SECTION 284 OF THE STANDARD SPECIFICATIONS.

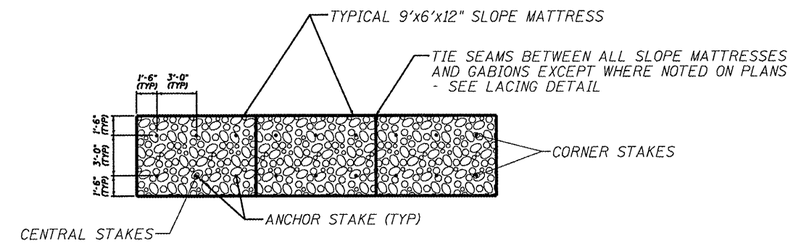

NOTES:
1. ANCHOR STAKES SHALL BE PROVIDED IN ACCORDANCE WITH SECTION 284 OF THE STANDARD SPECIFICATIONS.
2. ANCHOR STAKES ARE TO BE PLACED ON THREE-FOOT CENTERS, WITH AN ARRANGEMENT AS SHOWN ABOVE, FOR ALL SLOPE MATTRESSES LAID ON A SLOPE OF 2:1 OR GREATER.
3. ANCHOR STAKES FOR SLOPE MATTRESSES LAID ON SLOPE LESS THAN 2:1 AND GREATER THAN 10% SHALL OMIT THE CENTRAL STAKES SHOWN ABOVE - 4 STAKES PER 6'x9' MATTRESS.
4. ALL SLOPE MATTRESSES LAID ON SLOPES LESS THAN 10% SHALL NOT HAVE ANCHOR STAKES.

TYPICAL ANCHOR STAKE LAYOUT DETAIL

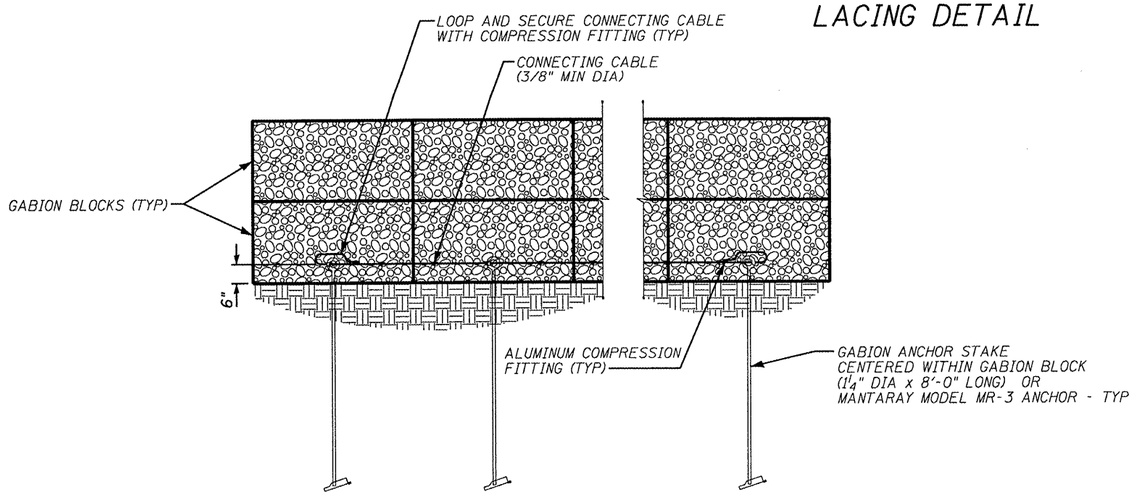

GABION ANCHOR STAKE SECURING DETAIL

GABION LEGEND

MARK	LENGTH	WIDTH	HEIGHT
A	6'	3'	3'
B	9'	3'	3'
C	12'	3'	3'
D	6'	3'	1½'
G	6'	3'	1'
H	9'	3'	1'

ILLINOIS DEPARTMENT OF TRANSPORTATION

GABION DETAILS
SECTION D4 SCOUR
MITIGATION 2006
VARIOUS ROUTES
VARIOUS COUNTIES

MAURER & STUTZ, INC.
ENGINEERS SURVEYORS

ROUTE NO.	SECTION	COUNTY	TOTAL SHEETS	SHEET NO.
VAR	*	VAR	66	65
FED. ROAD DIST. NO. 4		ILLINOIS	FED. AID PROJECT	

*** D4 SCOUR MITIGATION 2006**

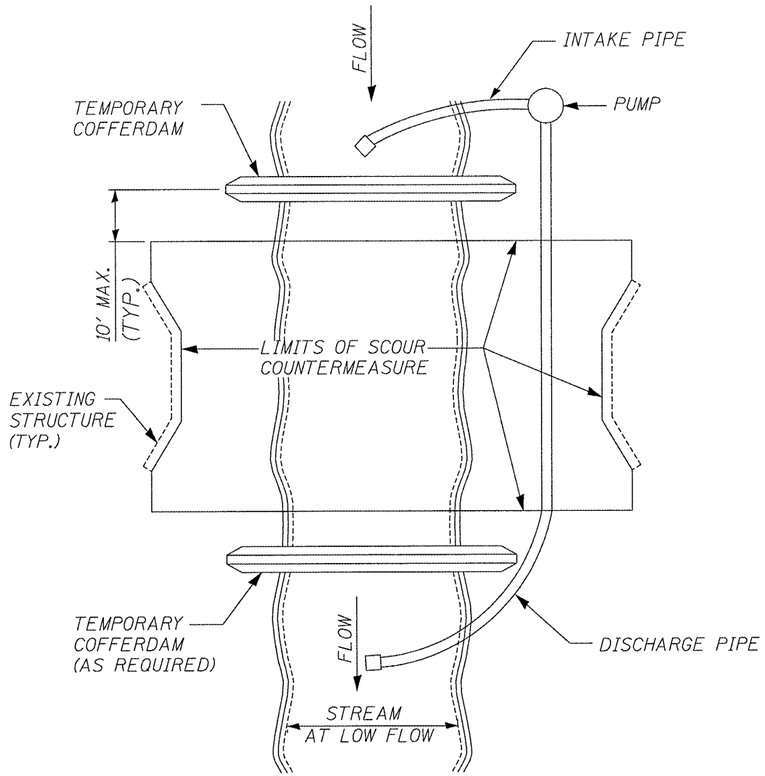

FIGURE D1. TEMPORARY COFFERDAM WITH PUMP BYPASS

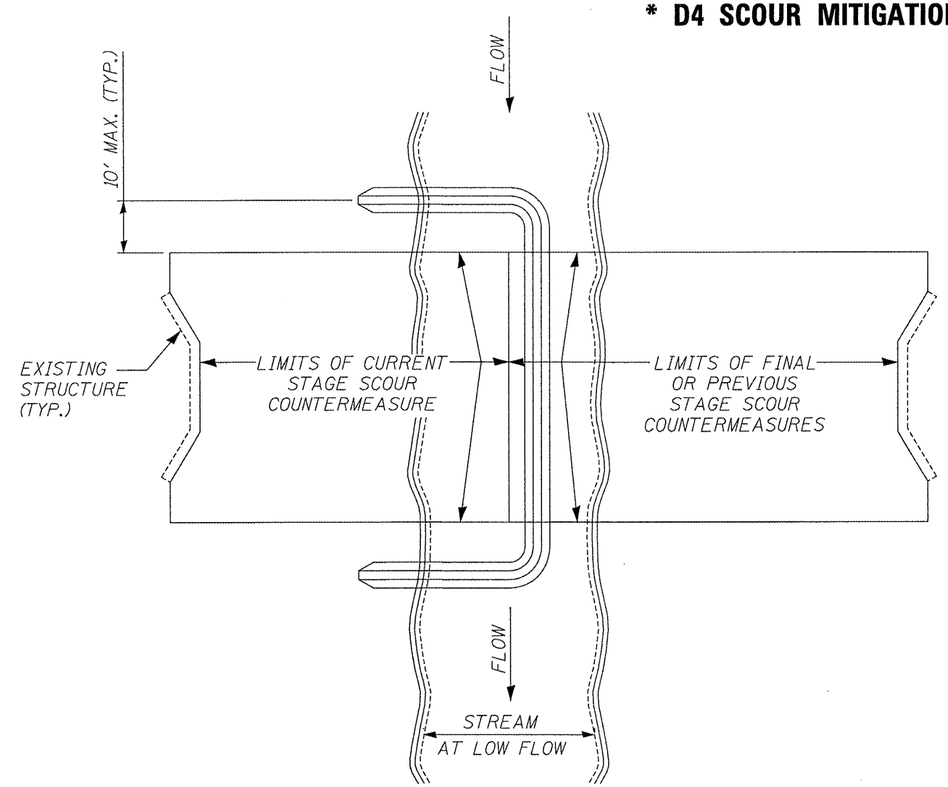

FIGURE D2. STAGED IN-STREAM CORRERDAM DIVISION

NOTE: DEWATERING SYSTEM DETAILS SHALL BE USED IN CONJUNCTION WITH THE PROJECT SPECIAL PROVISIONS.

ILLINOIS DEPARTMENT OF TRANSPORTATION

DEWATERING SYSTEM DETAILS
SECTION D4 SCOUR
MITIGATION 2006
VARIOUS ROUTES
VARIOUS COUNTIES

MAURER & STUTZ, INC.
ENGINEERS SURVEYORS

ROUTE NO.	SECTION	COUNTY	TOTAL SHEETS	SHEET NO.
VAR	*	VAR	66	66
FED. ROAD DIST. NO. 4		ILLINOIS	FED. AID PROJECT	

*** D4 SCOUR MITIGATION 2002**

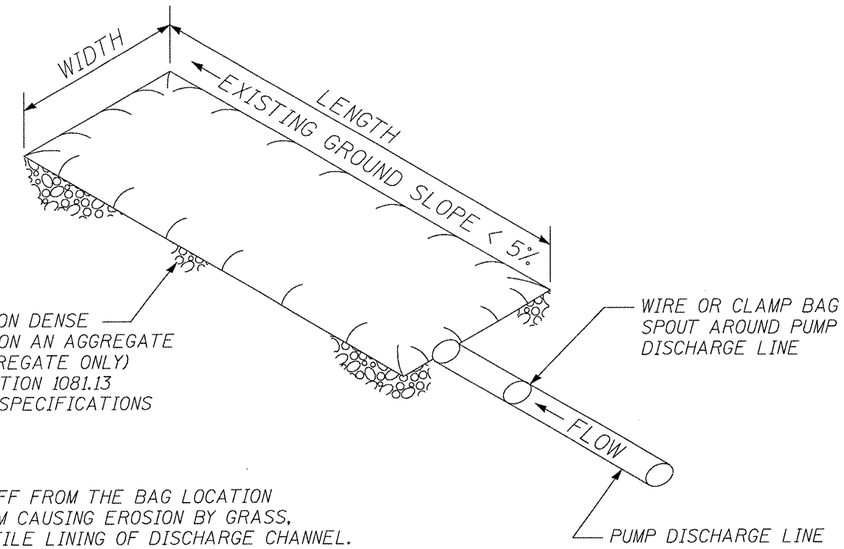

ENSURE THAT RUNOFF FROM THE BAG LOCATION IS PREVENTED FROM CAUSING EROSION BY GRASS, STONE, OR GEOTEXTILE LINING OF DISCHARGE CHANNEL.

REMOVE SILT WHEN BAG IS HALF FULL OR MORE OFTEN IF RECOMMENDED BY THE MANUFACTURER. DISPOSE OF SILT BY TRANSPORTING THE FILLED BAG TO DISPOSAL AREA. SLIT THE BAG, BLEND SILT INTO EXISTING TOPOGRAGHY, SEED AND MULCH

MAINTAIN EXTRA FILTER BAGS ON SITE. REPLACE DAMAGED BAGS PROMPTLY

TYPICAL FLOX RATE: 10 GPM x W x L

FIGURE S1. SEDIMENT FILTER BAG

NOTE: DEWATERING SYSTEM DETAILS SHALL BE USED IN CONJUNCTION WITH THE PROJECT SPECIAL PROVISIONS.

ILLINOIS DEPARTMENT OF TRANSPORTATION

DEWATERING SYSTEM DETAILS
SECTION D4 SCOUR
MITIGATION 2006
VARIOUS ROUTES
VARIOUS COUNTIES

MAURER & STUTZ, INC.
ENGINEERS SURVEYORS