F.A.P RTE.	SECTION	COUNTY	TOTAL SHEETS	SHEET NO.
669	(10R)RS-6	PEORIA	34	1
FED. ROAD DIST. NO.	ILLINOIS	CONTRACT NO. 68797		

6-13-08 Letting, Item 147

STATE OF ILLINOIS
DEPARTMENT OF TRANSPORTATION
DIVISION OF HIGHWAYS

PROPOSED HIGHWAY PLANS

FOR INDEX OF SHEETS, SEE SHEET NO. 2

LIST OF STANDARDS:
701426–02
701601–05
701701–05
701901
780001–01
873001–01
880006
BLR 21–7

FAP ROUTE 669 (IL 116)
SECTION (10R)RS–6
PROJECT ACF-ACHSIP-0669(030)
PEORIA COUNTY
C–94–054–08

D–94–035–08

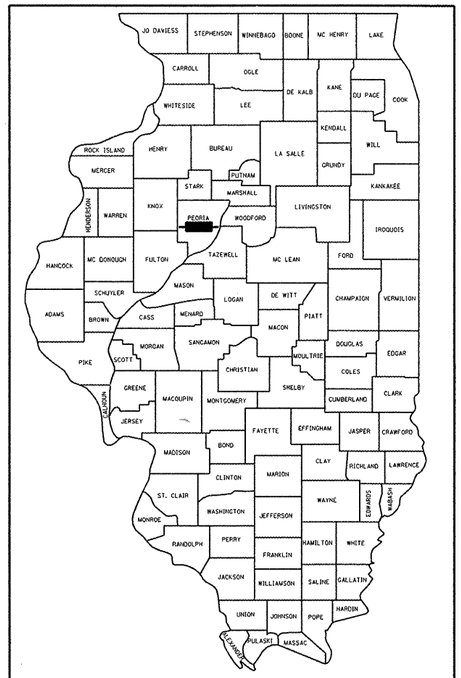

LOCATION OF SECTION INDICATED THUS:–

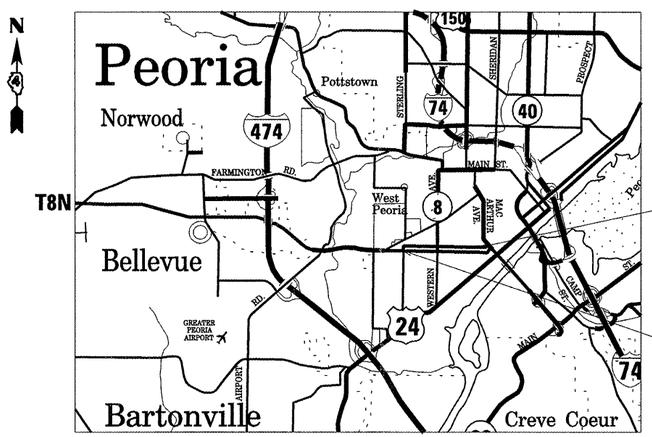

Project Ends
Sta. 74 + 50 (Howett Street)
Sta. 28 + 00 (Lincoln Avenue)

Project Begins
Sta. 4 + 00 (Howett Street)
Sta. 104 + 00 (Lincoln Avenue)

DESCRIPTION:
WORK INCLUDES A MICRO OVERLAY ON IL 116 (HOWETT AND LINCOLN ONE–WAY COUPLE) FROM JEFFERSON AVENUE TO GRISWOLD STREET IN PEORIA

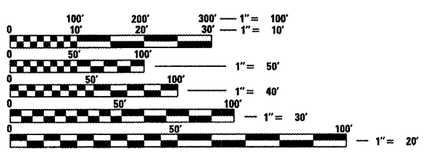

FULL SIZE PLANS HAVE BEEN PREPARED USING STANDARD ENGINEERING SCALES. REDUCED SIZED PLANS WILL NOT CONFORM TO STANDARD SCALES. IN MAKING MEASUREMENTS ON REDUCED PLANS, THE ABOVE SCALES MAY BE USED.

J.U.L.I.E.
JOINT UTILITY LOCATION INFORMATION FOR EXCAVATION
1–800–892–0123
OR 811

GROSS LENGTH OF THE SECTION = 15,100 FT = 2.86 MILES
NET LENGTH OF THE SECTION = 15,100 FT = 2.86 MILES

STATE OF ILLINOIS
DEPARTMENT OF TRANSPORTATION
DIVISION OF HIGHWAYS

SUBMITTED March 20, 20 08
DEPUTY DIRECTOR OF HIGHWAYS, REGION ENGINEER
May 9, 20 08
Eric E. Harm
Interim ENGINEER OF DESIGN AND ENVIRONMENT
May 9, 20 08
Christine M. Reed
DIRECTOR OF HIGHWAYS, CHIEF ENGINEER

PROJECT ENGINEER MICHAEL J. BOYER
PROJECT MANAGER SEAN COYLE

CONTRACT NO. 68797
CATALOG NO. 033799–00D

PRINTED BY THE AUTHORITY OF THE STATE OF ILLINOIS

CONTRACT NO. 68797

F.A.P. RTE.	SECTION	COUNTY	TOTAL SHEETS	SHEET NO.
669	(10R)RS-6	PEORIA	34	2
STA. 73+50		TO STA.68+50		
FED. ROAD DIST. NO.	ILLINOIS	FED. AID PROJECT		

INDEX OF SHEETS

1	COVER SHEET
2	GENERAL NOTES & COMMITMENTS
3	SUMMARY OF QUANTITIES
4-6	TYPICAL SECTIONS
7	SCHEDULE OF QUANTITIES
8-19	PLAN SHEETS HOWETT ST.
20-32	PLAN SHEETS LINCOLN AVE.
33	SHARED LANE SYMBOL DETAIL
34	TRAFFIC SIGNAL DETAILS

GENERAL NOTES:

COMMITMENTS
Commitments are not to be astered without the written approval of all parties to which the commitment was made.

PROPERTY OWNER ACCESS REQUIREMENTS
Access must be mantained to all existing properties during construction per Article 107.09 unless arrangements are made in writing by the Contractor with the property owners with a copy to the Engineer for short-term closure.

CONSECUTIVE SIDE STREET (ROAD) CLOSURE - PROHIBITED
1. No two consecutive side streets (roads) may be closed at the same time during construction. The Contractor must alternate streets (roads).
2. Adjacent side roads will not be closed simultaneously. BLR Standard 21 shall be used for all local road clousurewithout any enterances within the closed area. BLR Standard 22 can be used where it is necessary to allow local traffic access.

COMMITMENTS
There are no commitments for this project.

REVISIONS NAME	DATE

ILLINOIS DEPARTMENT OF TRANSPORTATION

GENERAL NOTES & COMMITMENTS

SCALE: VERT. HORIZ.

DATE

DRAWN BY

CHECKED BY

PLOT DATE = 3/20/2008
FILE NAME = c:\projects\safety\peoria\ill 116 lincoln_howett\lincoln_howett.dgn
PLOT SCALE = 40.0000 ' / IN.
USER NAME = bayermj

CONTRACT NO. 68797

F.A.P. RTE.	SECTION	COUNTY	TOTAL SHEETS	SHEET NO.
669	(10RIRS-6	PEORIA	34	3
STA. 73+50		TO STA.68+50		
FED. ROAD DIST. NO.	ILLINOIS	FED. AID PROJECT		

URBAN

SUMMARY OF QUANTITIES

CODE NO.	ITEM	UNITS	TOTAL QUANTITY	ACHSIP	ACF		
				CONSTRUCTION TYPE CODE			
				PEORIA CO.			
				SFTY - 2A	F000	Y031-1F	Y031-1F
				90% FED - 10% STATE	90% FED - 10% STATE	95% STATE - 5% CITY	96.7% STATE - 3.3% CITY
67100100	MOBILIZATION	L SUM	1	1			
70101830	TRAFFIC CONTROL AND PROTECTION, STANDARD BLR 21	L SUM	1	1			
70102630	TRAFFIC CONTROL AND PROTECTION, STANDARD 701601	L SUM	1	1			
70102635	TRAFFIC CONTROL AND PROTECTION, STANDARD 701701	L SUM	1			0.8	0.2
70300100	SHORT-TERM PAVEMENT MARKING	FOOT	2949.8	2949.8			
70301000	WORK ZONE PAVEMENT MARKING REMOVAL	SQ FT	983.3	983.3			
* 78000100	THERMOPLASTIC PAVEMENT MARKING - LETTERS AND SYMBOLS	SQ FT	937.5	937.5			
* 78000200	THERMOPLASTIC PAVEMENT MARKING - LINE 4"	FOOT	13748	13748			
* 78000400	THERMOPLASTIC PAVEMENT MARKING - LINE 6"	FOOT	23321	23321			
* 78000500	THERMOPLASTIC PAVEMENT MARKING - LINE 8"	FOOT	5454	5454			
* 78000600	THERMOPLASTIC PAVEMENT MARKING - LINE 12"	FOOT	2549	2549			
* 78000650	THERMOPLASTIC PAVEMENT MARKING - LINE 24"	FOOT	509	509			
78300100	PAVEMENT MARKING REMOVAL	SQ FT	76.3	76.3			
* 87301245	ELECTRIC CABLE IN CONDUIT, SIGNAL NO.14 5C	FOOT	211			211	
* 88800100	PEDESTRIAN PUSH-BUTTON	EACH	8			8	
* 89500100	RELOCATE EXISTING SIGNAL HEAD	EACH	1			1	
X4480200	MICRO - SURFACING, 2 PASSES	SQ YD	56796		56796		
* X8730027	ELECTRIC CABLE IN CONDUIT, GROUNDING, NO. 6 1C	FOOT	402.5			209	193.5
X0325980	BIKE LANE MICRO OVERLAY, 3 PASSES	SQ YD	9723	9723			
* X0325981	RELOCATE EXISTING SIGNAL HEAD, SPECIAL	L SUM	1			1	
* X0325982	GROUND EXISTING HANDHOLE	EACH	15			12	3

* SPECIALTY ITEM

REVISIONS	
NAME	DATE

ILLINOIS DEPARTMENT OF TRANSPORTATION

SUMMARY OF QUANTITIES

SCALE: VERT. HORIZ.

DATE

DRAWN BY

CHECKED BY

PLOT DATE = 3/28/2008
FILE NAME = c:\projects\safety\peoria\vl 116 lincoln.hawest\lincoln.hawest.dgn
PLOT SCALE = 40.0000 ' / IN.
USER NAME = bayermj

CONTRACT NO. 68797

F.A.P. RTE.	SECTION	COUNTY	TOTAL SHEETS	SHEET NO.
669	(10R)RS-6	PEORIA	34	4
STA. 73+50		TO STA.68+50		
FED. ROAD DIST. NO.	ILLINOIS	FED. AID PROJECT		

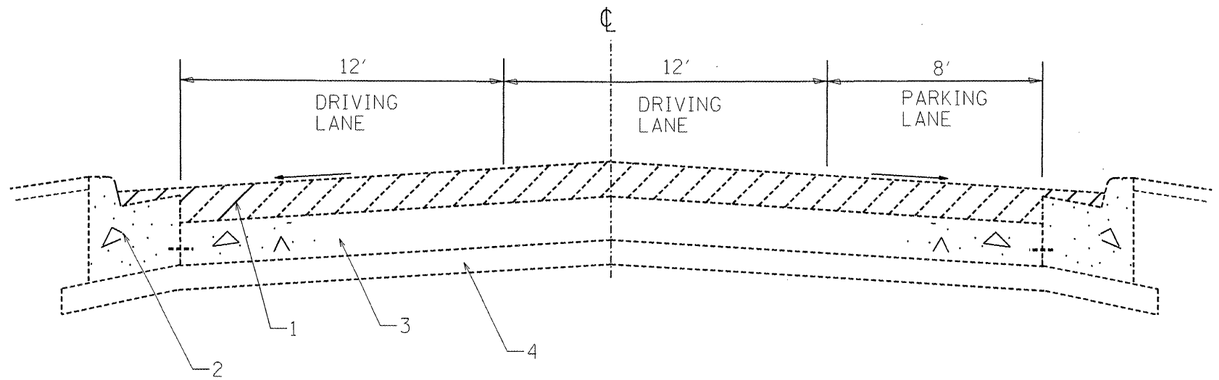

EXISTING TYPICAL
STA. 4+00 TO STA. 63+45 HOWETT ST.
STA. 40+47.25 TO STA. 103+13.31 LINCOLN AVE.

PARKING LANE TRANSITION FROM ONE TO TWO LANES
63+45 TO 65+20 HOWETT STREET
38+77.25 TO 40+47.25 LINCOLN AVENUE

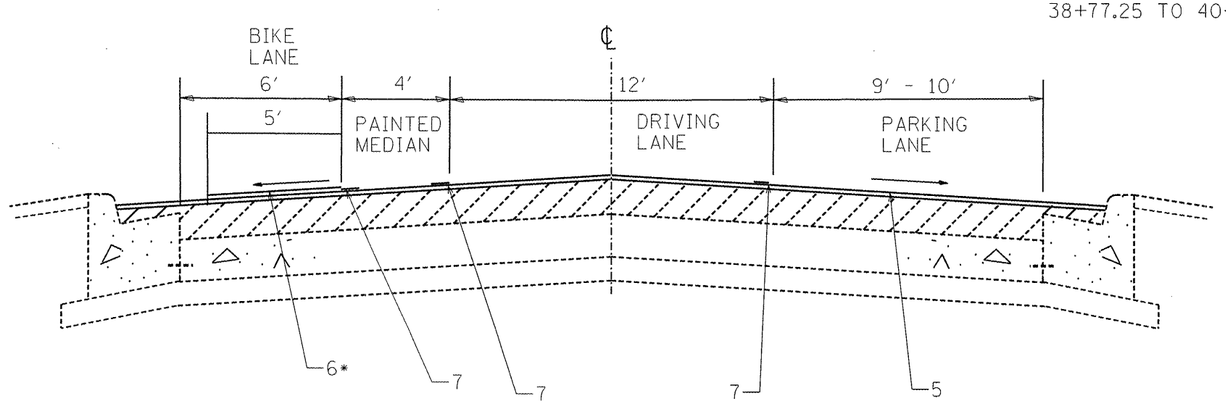

PROPOSED TYPICAL
STA. 4+00 TO STA. 63+45 HOWETT ST.
STA. 40+47.25 TO STA. 103+13.31 LINCOLN AVE.

* Bike lane width = 6 FT.
BIKE LANE MICRO OVERLAY = 5 FT.
Gap at the curb = 1 FT.

LEGEND
1. EXISTING HMA OVERLAY
2. EXISTING CURB AND GUTTER
3. EXISTING PCC PAVEMENT
4. EXISTING SUBBASE
5. PROPOSED MICRO-SURFACING, 2 PASSES
6. PROPOSED BIKE LANE MICRO OVERLAY, 3 PASSES
7. PROPOSED PAVEMENT MARKING

REVISIONS	
NAME	DATE

ILLINOIS DEPARTMENT OF TRANSPORTATION

LINCOLN AND HOWETT
TYPICAL SECTION

SCALE: VERT. HORIZ.
DATE
DRAWN BY
CHECKED BY

PLOT DATE = 3/20/2008
FILE NAME = c:\projects\safety\peoria\il 116 lincoln_howett\lincoln_howett.dgn
PLOT SCALE = 40.0000 ' / IN.
USER NAME = bogermj

CONTRACT NO. 68797

F.A.P. RTE.	SECTION	COUNTY	TOTAL SHEETS	SHEET NO.
669	(10R)RS-6	PEORIA	34	5
STA. 73+50		TO STA.68+50		
FED. ROAD DIST. NO.	ILLINOIS	FED. AID PROJECT		

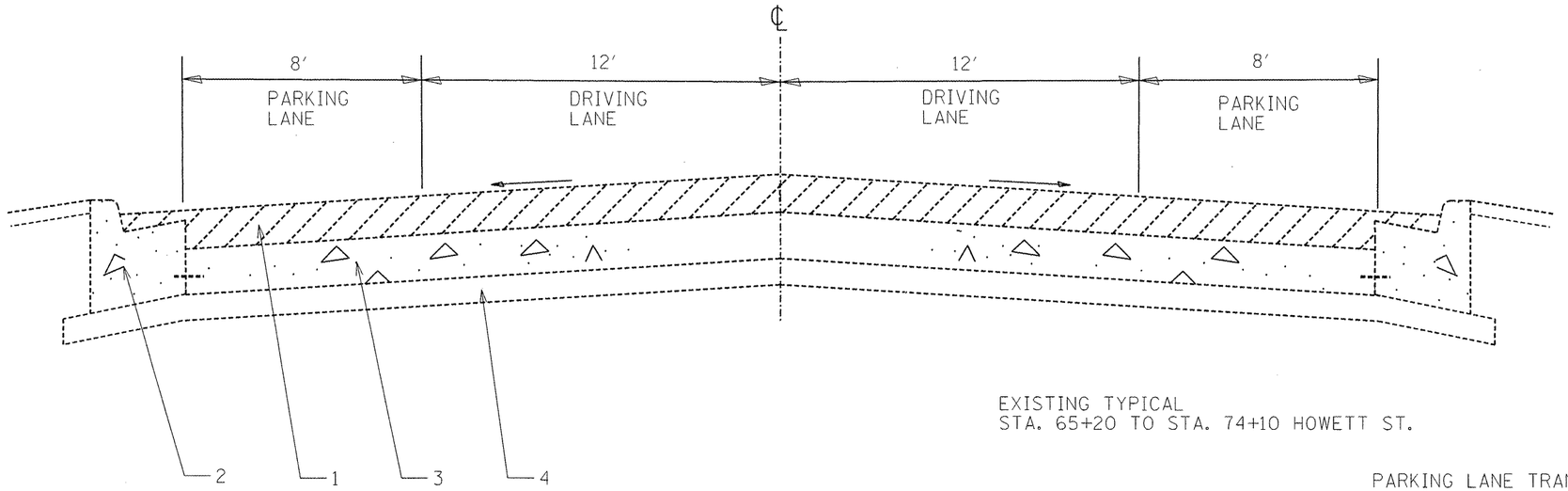

EXISTING TYPICAL
STA. 65+20 TO STA. 74+10 HOWETT ST.

PARKING LANE TRANSITION FROM ONE TO TWO LANES
63+45 TO 65+20 HOWETT STREET
38+77.25 TO 40+47.25 LINCOLN AVENUE

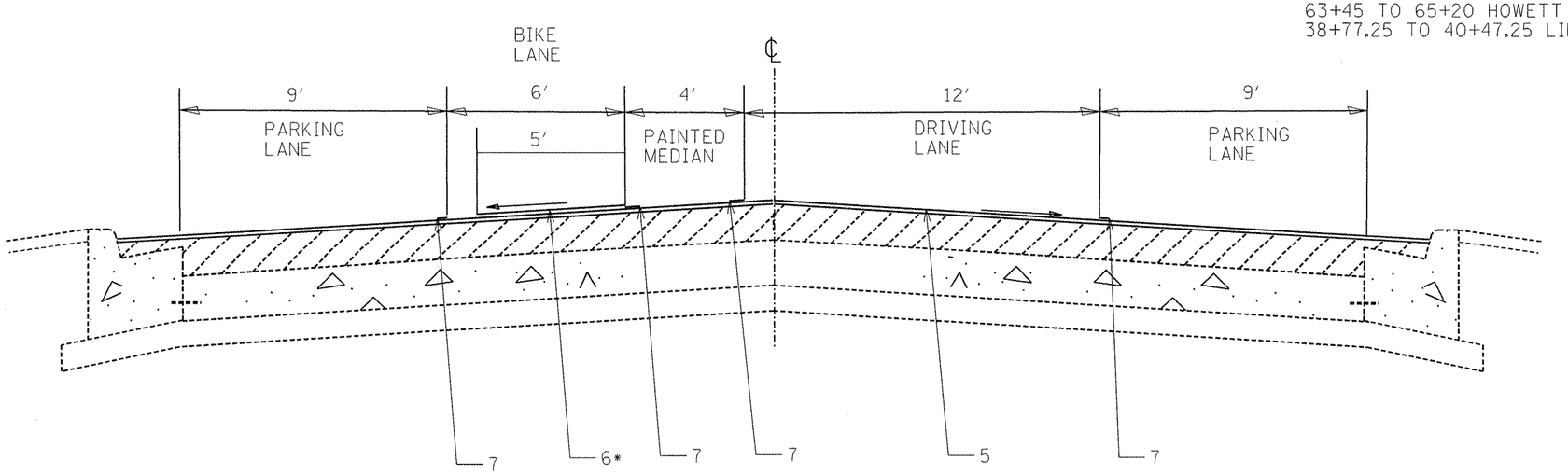

PROPOSED TYPICAL
STA. 65+20 TO STA. 74+10 HOWETT ST.

LEGEND
1. EXISTING HMA OVERLAY
2. EXISTING CURB AND GUTTER
3. EXISTING PCC PAVEMENT
4. EXISTING SUBBASE
5. PROPOSED MICRO-SURFACING, 2 PASSES
6. PROPOSED BIKE LANE MICRO OVERLAY, 3 PASSES
7. PROPOSED PAVEMENT MARKING

* Bike lane width = 6 FT.
BIKE LANE MICRO OVERLAY = 5 FT.
Gap at the curb = 1 FT.

REVISIONS	
NAME	DATE

ILLINOIS DEPARTMENT OF TRANSPORTATION

HOWETT
TYPICAL SECTION

SCALE: VERT. HORIZ.
DATE
DRAWN BY
CHECKED BY

PLOT DATE = 3/28/2008
FILE NAME = c:\projects\safety\peoria\il 116 lincoln_howett\lincoln_howett.dgn
PLOT SCALE = 40.0000 ' / IN.
USER NAME = baganmj

CONTRACT NO. 68797

F.A.P. RTE.	SECTION	COUNTY	TOTAL SHEETS	SHEET NO.
669	(10R)RS-6	PEORIA	34	6
STA. 73+50		TO STA.68+50		
FED. ROAD DIST. NO.	ILLINOIS	FED. AID PROJECT		

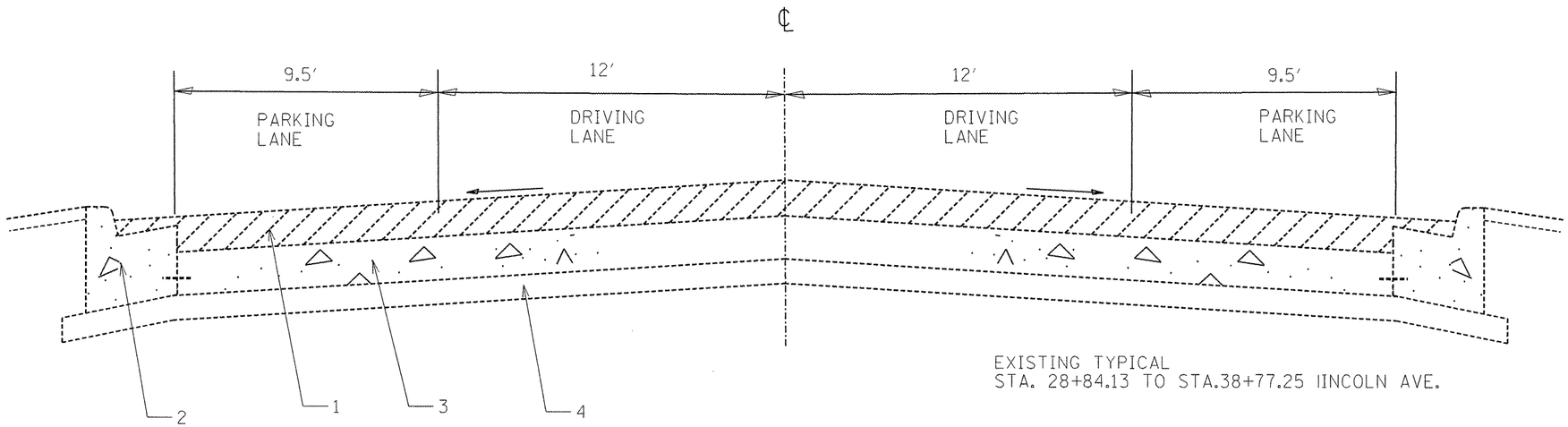

EXISTING TYPICAL
STA. 28+84.13 TO STA.38+77.25 LINCOLN AVE.

PARKING LANE TRANSITION FROM ONE TO TWO LANES
63+45 TO 65+20 HOWETT STREET
38+77.25 TO 40+47.25 LINCOLN AVENUE

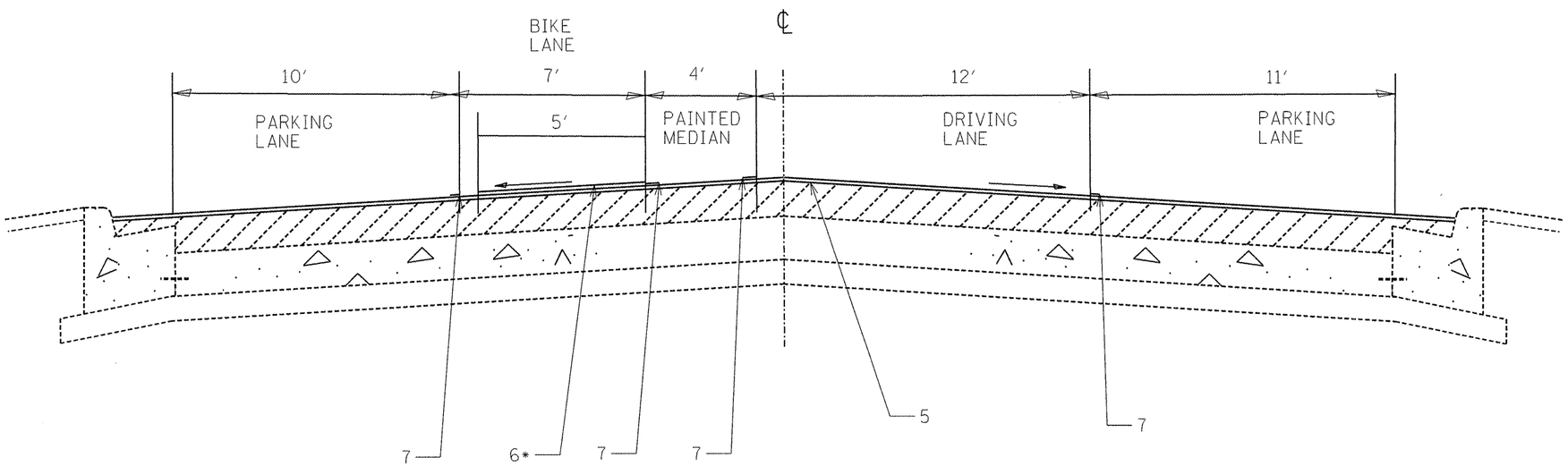

PROPOSED TYPICAL
STA.28+84.13 TO STA. 38+77.25 LINCOLN AVE.

* Bike lane width = 6 FT.
BIKE LANE MICRO OVERLAY = 5 FT.
Gap at the curb = 1 FT.

LEGEND
1. EXISTING HMA OVERLAY
2. EXISTING CURB AND GUTTER
3. EXISTING PCC PAVEMENT
4. EXISTING SUBBASE
5. PROPOSED MICRO-SURFACING, 2 PASSES
6. PROPOSED BIKE LANE MICRO OVERLAY, 3 PASSES
7. PROPOSED PAVEMENT MARKING

REVISIONS NAME	DATE

ILLINOIS DEPARTMENT OF TRANSPORTATION

LINCOLN
TYPICAL SECTION

SCALE: VERT. HORIZ.
DATE
DRAWN BY
CHECKED BY

PLOT DATE = 3/20/2008
FILE NAME = c:\projects\safety\peoria\il 116 lincoln_howett\lincoln_howett.dgn
PLOT SCALE = 40.0000 ' / IN.
USER NAME = baugermj

CONTRACT NO. 68797

F.A.P. RTE.	SECTION	COUNTY	TOTAL SHEETS	SHEET NO.
669	(10R)RS-6	PEORIA	34	7
STA. 73+50		TO STA.68+50		
FED. ROAD DIST. NO.	ILLINOIS	FED. AID PROJECT		

SCHEDULE OF QUANTITIES - WESTERN & HOWETT		
ITEM DESCRIPTION	UNIT	QUANTITY
GROUND EXISTING HANDHOLE	EACH	4.0

SCHEDULE OF QUANTITIES - LINCOLN & BLAINE		
ITEM DESCRIPTION	UNIT	QUANTITY
ELECTRIC CABLE IN CONDUIT, SIGNAL, NO. 14 5C	FOOT	211.0
PEDESTRIAN PUSH-BUTTON	EACH	8.0
RELOCATE EXISTING SIGNAL HEAD	EACH	1.0
GROUND EXISTING HANDHOLE	EACH	4.0
ELECTRIC CABLE IN CONDUIT, GROUNDING, NO. 6 1C	FOOT	209.0

SCHEDULE OF QUANTITIES - LINCOLN & WESTMORELAND		
ITEM DESCRIPTION	UNIT	QUANTITY
ELECTRIC CABLE IN CONDUIT, GROUNDING, NO. 6 1C	FEET	193.5
GROUND EXISTING HANDHOLE	EACH	3.0

SCHEDULE OF QUANTITIES - WESTERN & LINCOLN		
ITEM DESCRIPTION	UNIT	QUANTITY
RELOCATE EXISTING SIGNAL HEADS, SPECIAL	L SUM	1.0
GROUND EXISTING HANDHOLE	EACH	4.0

67100100 MOBILIZATION		
LOCATION		L SUM
JOBSITE		1
	TOTAL	1

70101830 TRAFFIC CONTROL AND PROTECTION STANDARD BLR 21			
LOCATION			L SUM
JOBSITE			1
		TOTAL	1

70102630 TRAFFIC CONTROL AND PROTECTION STANDARD 701601			
LOCATION			L SUM
JOBSITE			1
		TOTAL	1

70102630 TRAFFIC CONTROL AND PROTECTION STANDARD 701701			
LOCATION			L SUM
JOBSITE			1
		TOTAL	1

X4480200 MICRO-SURFACING, 2 PASSES			
LOCATION			SQ YD
HOWETT STREET			
JEFFERSON ST. - WESTERN AVE.			16018
WESTERN AVE.- GRISWALD ST.			10378
LINCOLN AVENUE			
ADAMS ST. - WESTERN AVE.			17312
WESTERN AVE.- GRISWALD ST.			10937
GRISWALD STREET			
HOWETT ST. - LINCOLN AVE.			2151
		TOTAL	56796

X4480200 MICRO-SURFACING, 2 PASSES			
LOCATION			SQ YD
HOWETT STREET			
JEFFERSON ST. - WESTERN AVE.			2982
WESTERN AVE.- GRISWALD ST.			1736
LINCOLN AVENUE			
ADAMS ST. - WESTERN AVE.			3175
WESTERN AVE.- GRISWALD ST.			1830
		TOTAL	9723

			70300100	70301000	78000200	78000400	78000500	78000600	78000650		78000100	78300100
			SHORT-TERM PAVT MKING - LINE 4"	WORK ZONE PAVT MKING REM	THPL PVT MK LINE 4	THPL PVT MK LINE 6	THPL PVT MK LINE 8	THPL PVT MK LINE 12	THPL PVT MK LINE 24	Symbols	THPL PVT MK LTR &SYM	PAVT MARKING REMOVAL
			Ft.	Sq. Ft.	Ft.	Ft.	Ft.	Ft.	Ft.	No.	Sq. Ft.	Sq Ft.
Adams St.	to	Myer Ave.	31.5	10.5	315	450	50	40	40	2	25	
Myer Ave.	to	Linden St.	15	5.0	150	123	50	18		1	12.5	
Linden St.	to	Jefferson Ave.	18.5	6.2	185	130	585	21	138	1	12.5	
Jefferson Ave.	to	New St.	25	8.3	250	408	50	45		2	25	
New St.	to	Charlton St.	45.5	15.2	455	565	50	62		2	25	
Charlton St.	to	Webster St.	23.2	7.7	232	365	50	52		2	25	
Webster St.	to	Louisa St.	55.8	18.6	558	1160	50	160		3	37.5	
Louisa St.	to	Shelley St.	38	12.7	380	1125	50	110		3	37.5	
Shelley St.	to	Warren St.	14.1	4.7	141	500	50	45		2	25	
Warren St.	to	Blain St.	36.9	12.3	369	1107	50	97		3	37.5	
Blain St.	to	Western Ave.	49.6	16.5	496	1104	614	123	120	4	50	
Western Ave.	to	Madison Park Ter.	65	21.7	650	1334	50	100		4	50	
Madison Park Ter.	to	Westmoreland Ave.	91.2	30.4	912	1600	274	189	24	4	50	
Westmoreland Ave.	to	Griswald St.	186.5	62.2	1865	1650	492	159	62	4	50	
		Subtotal	695.8	231.9	6958	11621	2465	1221	384	37	462.5	
						Howett						
Jefferson Ave.	to	New St.	20.8	6.9	208	625	350	176		2	25	
New St.	to	Linden St.	21.8	7.3	218			78		1	12.5	
Linden St.	to	Howett St.	19.8	6.6	198			81		1	12.5	
Howett St.	to	Charlton St.	38.8	12.9	388	1140	113	88		2	25	
Charlton St.	to	Webster St.	20.2	6.7	202	381	114	46		2	25	
Webster St.	to	Louisa St.	58.3	19.4	583	1161	114	94		4	50	
Louisa St.	to	Shelley St.	57.6	19.2	576	1150	114	94		3	37.5	
Shelley St.	to	Warren St.	26.5	8.8	265	517	114	52		2	25	
Warren St.	to	Blain St.	57.4	19.1	574	1130	114	94		3	37.5	
Blain St.	to	Western Ave.	41.4	13.8	414	842	1391	103	125	4	50	76.33
Western Ave.	to	Madison Park Ter.	57.3	19.1	573	1398	237	162		4	50	
Madison Park Ter.	to	Westmoreland Ave.	84.1	28.0	841	1679	278	124		5	62.5	
Westmoreland Ave.	to	Griswald St.	1750	583.3	1750	1677	50	136		5	62.5	
		Subtotal	2254	751.3	6790	11700	2989	1328	125	38	475	76.33
		Total	2949.8	983.3	13748	23321	5454	2549	509	75	937.5	76.33

REVISIONS	
NAME	DATE

ILLINOIS DEPARTMENT OF TRANSPORTATION

SCHEDULE OF QUANTITIES

SCALE: VERT. HORIZ.

DATE

DRAWN BY

CHECKED BY

PLOT DATE = 3/29/2010
FILE NAME = c:\pwworking\peoria\d1161 lincoln_howett\lincoln_howett.dgn
PLOT SCALE = 40.0000 ' / IN.
USER NAME = bagermaj

CONTRACT NO. 68797

F.A.P. RTE.	SECTION	COUNTY	TOTAL SHEETS	SHEET NO.
669	(10R)RS-6	PEORIA	34	8
STA. 73+50		TO STA.68+50		
FED. ROAD DIST. NO.	ILLINOIS	FED. AID PROJECT		

REVISIONS	
NAME	DATE

ILLINOIS DEPARTMENT OF TRANSPORTATION

HOWETT PLAN

SCALE: VERT.
HORIZ.

DATE

DRAWN BY

CHECKED BY

PLOT DATE = 3/20/2008
FILE NAME = c:\projects\safety\peoria\ill116 lincoln_howett\lincoln_howett.dgn
PLOT SCALE = 40.0000 ' / IN.
USER NAME = bogermj

CONTRACT NO. 68797

F.A.P. RTE.	SECTION	COUNTY	TOTAL SHEETS	SHEET NO.
669	(10R)RS-6	PEORIA	34	9
STA. 68+50		TO STA.62+50		
FED. ROAD DIST. NO.	ILLINOIS	FED. AID PROJECT		

REVISIONS	
NAME	DATE

ILLINOIS DEPARTMENT OF TRANSPORTATION

HOWETT PLAN

SCALE: VERT.
HORIZ.
DATE

DRAWN BY
CHECKED BY

PLOT DATE = 3/20/2008
FILE NAME = c:\projects\safety\peoria\il 116 lincoln.howett\lincoln.howett.dgn
PLOT SCALE = 40.0000 ' / IN.
USER NAME = bagermj

CONTRACT NO. 68797

F.A.P. RTE.	SECTION	COUNTY	TOTAL SHEETS	SHEET NO.
669	(10R)RS-6	PEORIA	34	10
STA. 62+50		TO STA.56+50		
FED. ROAD DIST. NO.	ILLINOIS	FED. AID PROJECT		

REVISIONS	
NAME	DATE

ILLINOIS DEPARTMENT OF TRANSPORTATION

HOWETT PLAN

SCALE: VERT.
HORIZ.

DATE

DRAWN BY

CHECKED BY

PLOT DATE = 3/26/2008
FILE NAME = c:\projects\safety\peoria\11B lincoln_howett\lincoln_howett.dgn
PLOT SCALE = 40.0000 ' / IN.
USER NAME = bagermj

CONTRACT NO. 68797

F.A.P. RTE.	SECTION	COUNTY	TOTAL SHEETS	SHEET NO.
669	(10R)RS-6	PEORIA	34	11
STA. 56+50		TO STA.50+50		
FED. ROAD DIST. NO.	ILLINOIS	FED. AID PROJECT		

REVISIONS	
NAME	DATE

ILLINOIS DEPARTMENT OF TRANSPORTATION

HOWETT PLAN

SCALE: VERT. HORIZ.

DATE

DRAWN BY

CHECKED BY

PLOT DATE = 3/20/2008
FILE NAME = c:\projects\safety\peoria\il 116 lincoln_howett\lincoln_howett.dgn
PLOT SCALE = 40.0000 ' / IN.
USER NAME = bogermj

CONTRACT NO. 68797

F.A.P. RTE.	SECTION	COUNTY	TOTAL SHEETS	SHEET NO.
669	(10R)RS-6	PEORIA	34	12
STA. 50+50		TO STA.44+50		
FED. ROAD DIST. NO.	ILLINOIS	FED. AID PROJECT		

REVISIONS	
NAME	DATE

ILLINOIS DEPARTMENT OF TRANSPORTATION

HOWETT PLAN

SCALE: VERT.
HORIZ.
DATE

DRAWN BY
CHECKED BY

PLOT DATE = 3/20/2008
FILE NAME = c:\projects\safety\peoria\ill116 lincoln.howett\lincoln.howett.dgn
PLOT SCALE = 40.0000 ' / IN.
USER NAME = bujarmj

CONTRACT NO. 68797

F.A.P. RTE.	SECTION	COUNTY	TOTAL SHEETS	SHEET NO.
669	(10R)RS-6	PEORIA	34	13
STA. 44+50		TO STA.38+50		
FED. ROAD DIST. NO.	ILLINOIS	FED. AID PROJECT		

REVISIONS	
NAME	DATE

ILLINOIS DEPARTMENT OF TRANSPORTATION

HOWETT PLAN

SCALE: VERT.
HORIZ.
DATE

DRAWN BY
CHECKED BY

PLOT DATE = 3/20/2008
FILE NAME = c:\projects\safety\peoria\il 116 lincoln.howett\lincoln.howett.dgn
PLOT SCALE = 40.0000 ' / IN.
USER NAME = bagermj

CONTRACT NO. 68797

F.A.P. RTE.	SECTION	COUNTY	TOTAL SHEETS	SHEET NO.
669	(10)RS-6	PEORIA	34	14
STA. 38+50		TO STA.32+50		
FED. ROAD DIST. NO.	ILLINOIS	FED. AID PROJECT		

REVISIONS	
NAME	DATE

ILLINOIS DEPARTMENT OF TRANSPORTATION

HOWETT PLAN

SCALE: VERT.
HORIZ.

DATE

DRAWN BY

CHECKED BY

PLOT DATE = 3/20/2008
FILE NAME = c:\projects\safety\peoria\il 116 lincoln_howett\lincoln_howett.dgn
PLOT SCALE = 40.0000 ' / IN.
USER NAME = bogemuj

CONTRACT NO. 68797

F.A.P. RTE.	SECTION	COUNTY	TOTAL SHEETS	SHEET NO.
669	(10R)RS-6	PEORIA	34	15
STA. 32+50		TO STA.25+50		
FED. ROAD DIST. NO.	ILLINOIS	FED. AID PROJECT		

PLOT DATE = 3/26/2009
FILE NAME = c:\projects\safety\peoria\il 116 lincoln-howett\lincoln-howett.dgn
PLOT SCALE = 40.0000 ' / IN.
USER NAME = bogerrj

REVISIONS	
NAME	DATE

ILLINOIS DEPARTMENT OF TRANSPORTATION

HOWETT PLAN

SCALE: VERT.
HORIZ.

DATE

DRAWN BY

CHECKED BY

CONTRACT NO. 68797

F.A.P. RTE.	SECTION	COUNTY	TOTAL SHEETS	SHEET NO.
669	(10R)RS-6	PEORIA	34	16
STA. 25+50		TO STA.20+50		
FED. ROAD DIST. NO.	ILLINOIS	FED. AID PROJECT		

REVISIONS	
NAME	DATE

ILLINOIS DEPARTMENT OF TRANSPORTATION

HOWETT PLAN

SCALE: VERT.
HORIZ.

DATE

DRAWN BY

CHECKED BY

PLOT DATE = 3/20/2008
FILE NAME = c:\projects\safety\peoria\11 116 lincoln_howett\lincoln_howett.dgn
PLOT SCALE = 40.0000 ' / IN.
USER NAME = bayerma

CONTRACT NO. 68797

F.A.P. RTE.	SECTION	COUNTY	TOTAL SHEETS	SHEET NO.
669	(10R)RS-6	PEORIA	34	17
STA. 20+50		TO STA.14+50		
FED. ROAD DIST. NO.	ILLINOIS	FED. AID PROJECT		

REVISIONS	
NAME	DATE

ILLINOIS DEPARTMENT OF TRANSPORTATION

HOWETT PLAN

SCALE: VERT. HORIZ.

DATE

DRAWN BY

CHECKED BY

PLOT DATE = 3/20/2008
FILE NAME = c:\projects\safety\peoria\il 116 lincoln_howett\lincoln_howett.dgn
PLOT SCALE = 40.0000 ' / IN.
USER NAME = bagerrej

CONTRACT NO. 68797

F.A.P. RTE.	SECTION	COUNTY	TOTAL SHEETS	SHEET NO.
669	(10R)RS-6	PEORIA	34	18
STA. 14+50		TO STA.8+50		
FED. ROAD DIST. NO.	ILLINOIS	FED. AID PROJECT		

REVISIONS	
NAME	DATE

ILLINOIS DEPARTMENT OF TRANSPORTATION

HOWETT PLAN

SCALE: VERT.
HORIZ.

DATE

DRAWN BY

CHECKED BY

PLOT DATE = 3/20/2008
FILE NAME = c:\projects\safety\peoria\il 116 lincoln_howett\lincoln_howett.dgn
PLOT SCALE = 48.0000 ' / IN.
USER NAME = bugenmj

CONTRACT NO. 68797

F.A.P. RTE.	SECTION	COUNTY	TOTAL SHEETS	SHEET NO.
669	(10R)RS-6	PEORIA	34	19
STA. 8+50		TO STA.4+50		
FED. ROAD DIST. NO.	ILLINOIS	FED. AID PROJECT		

REVISIONS	
NAME	DATE

ILLINOIS DEPARTMENT OF TRANSPORTATION

HOWETT PLAN

SCALE: VERT.
HORIZ.

DATE

DRAWN BY

CHECKED BY

PLOT DATE = 3/20/2008
FILE NAME = c:\pw_projects\safety\peoria\il 116 lincoln-howett\lincoln_howett.dgn
PLOT SCALE = 40.0000 ' / IN.
USER NAME = baymmj

CONTRACT NO. 68797

F.A.P. RTE.	SECTION	COUNTY	TOTAL SHEETS	SHEET NO.
669	(10R)RS-6	PEORIA	34	20
STA. 28+00	TO STA.33+50			
FED. ROAD DIST. NO.	ILLINOIS	FED. AID PROJECT		

REVISIONS	
NAME	DATE

ILLINOIS DEPARTMENT OF TRANSPORTATION

LINCOLN PLAN

SCALE: VERT. HORIZ.

DATE

DRAWN BY

CHECKED BY

PLOT DATE = 3/26/2008
FILE NAME = c:\pw_work\pw_fed\peoria\d116 lincoln_bowett\lincoln_bowett.dgn
PLOT SCALE = 40.0000 ' / IN.
USER NAME = bagermj

CONTRACT NO. 68797

F.A.P. RTE.	SECTION	COUNTY	TOTAL SHEETS	SHEET NO.
669	(10R)RS-6	PEORIA	34	21
STA. 33+50		TO STA. 39+50		
FED. ROAD DIST. NO.	ILLINOIS	FED. AID PROJECT		

REVISIONS	
NAME	DATE

ILLINOIS DEPARTMENT OF TRANSPORTATION

LINCOLN PLAN

SCALE: VERT.
HORIZ.

DATE

DRAWN BY

CHECKED BY

PLOT DATE = 3/20/2008
FILE NAME = c:\projects\safety\peoria\ill116 lincoln.hewett\lincoln.hewett.dgn
PLOT SCALE = 40.0000 ' / IN.
USER NAME = bagerm1

CONTRACT NO. 68797

F.A.P. RTE.	SECTION	COUNTY	TOTAL SHEETS	SHEET NO.
669	(10R)RS-6	PEORIA	34	22
STA. 39+50		TO STA. 45+50		
FED. ROAD DIST. NO.	ILLINOIS	FED. AID PROJECT		

REVISIONS	
NAME	DATE

ILLINOIS DEPARTMENT OF TRANSPORTATION

LINCOLN PLAN

SCALE: VERT.
HORIZ.

DATE

DRAWN BY

CHECKED BY

PLOT DATE = 3/29/2008
FILE NAME = c:\projects\safety\peoria\il 116 lincoln.howett\lincoln.howett.dgn
PLOT SCALE = 40.0000 ' / IN.
USER NAME = bagerrj

CONTRACT NO. 68797

F.A.P. RTE.	SECTION	COUNTY	TOTAL SHEETS	SHEET NO.
669	(10)RS-6	PEORIA	34	23
STA. 45+50		TO STA.52+50		
FED. ROAD DIST. NO.	ILLINOIS	FED. AID PROJECT		

REVISIONS	
NAME	DATE

ILLINOIS DEPARTMENT OF TRANSPORTATION

LINCOLN PLAN

SCALE: VERT.
HORIZ.

DATE

DRAWN BY

CHECKED BY

PLOT DATE = 3/20/2008
FILE NAME = c:\projects\safety\peoria\ill 116 lincoln.hewett\lincoln.hewett.dgn
PLOT SCALE = 40.0000 ' / IN.
USER NAME = bagermj

CONTRACT NO. 68797

F.A.P. RTE.	SECTION	COUNTY	TOTAL SHEETS	SHEET NO.
669	(10)RS-6	PEORIA	34	24
STA. 52+50		TO STA.58+50		
FED. ROAD DIST. NO.	ILLINOIS	FED. AID PROJECT		

REVISIONS	
NAME	DATE

ILLINOIS DEPARTMENT OF TRANSPORTATION

LINCOLN PLAN

SCALE: VERT.
HORIZ.

DATE

DRAWN BY

CHECKED BY

PLOT DATE = 3/20/2008
FILE NAME = e:\projects\safety\peoria\il 116 lincoln.hawest\lincoln.hawest.dgn
PLOT SCALE = 40.0000 ' / IN.
USER NAME = bagerm1

CONTRACT NO. 68797

F.A.P. RTE.	SECTION	COUNTY	TOTAL SHEETS	SHEET NO.
669	(10)RIRS-6	PEORIA	34	25
STA. 58+50		TO STA.64+50		
FED. ROAD DIST. NO.	ILLINOIS	FED. AID PROJECT		

REVISIONS	
NAME	DATE

ILLINOIS DEPARTMENT OF TRANSPORTATION

LINCOLN PLAN

SCALE: VERT.
HORIZ.

DATE

DRAWN BY

CHECKED BY

PLOT DATE = 3/20/2008
FILE NAME = c:\projects\safety\peoria\il 116 lincoln.hewett\lincoln.hewett.dgn
PLOT SCALE = 40.0000 ' / IN.
USER NAME = baganmj

CONTRACT NO. 68797

F.A.P. RTE.	SECTION	COUNTY	TOTAL SHEETS	SHEET NO.
669	(10)RS-6	PEORIA	34	26
STA. 64+50		TO STA.70+50		
FED. ROAD DIST. NO.	ILLINOIS	FED. AID PROJECT		

REVISIONS	
NAME	DATE

ILLINOIS DEPARTMENT OF TRANSPORTATION

LINCOLN PLAN

SCALE: VERT.
HORIZ.

DATE

DRAWN BY

CHECKED BY

PLOT DATE = 3/20/2008
FILE NAME = c:\projects\safety\peoria\il 116 lincoln.howett\lincoln.howett.dgn
PLOT SCALE = 40.0000 ' / IN.
USER NAME = bugermj

CONTRACT NO. 68797

F.A.P. RTE.	SECTION	COUNTY	TOTAL SHEETS	SHEET NO.
669	(10R)RS-6	PEORIA	34	27
STA. 70+50		TO STA.76+50		
FED. ROAD DIST. NO.	ILLINOIS	FED. AID PROJECT		

REVISIONS	
NAME	DATE

ILLINOIS DEPARTMENT OF TRANSPORTATION

LINCOLN PLAN

SCALE: VERT.
HORIZ.
DATE

DRAWN BY
CHECKED BY

PLOT DATE = 3/20/2008
FILE NAME = c:\projects\safety\peoria\il 116 lincoln_hewett\lincoln_hewett.dgn
PLOT SCALE = 40.0000 ' / IN.
USER NAME = bogerrj

CONTRACT NO. 68797

F.A.P. RTE.	SECTION	COUNTY	TOTAL SHEETS	SHEET NO.
669	(10R)RS-6	PEORIA	34	28
STA. 76+50		TO STA.82+50		
FED. ROAD DIST. NO.	ILLINOIS	FED. AID PROJECT		

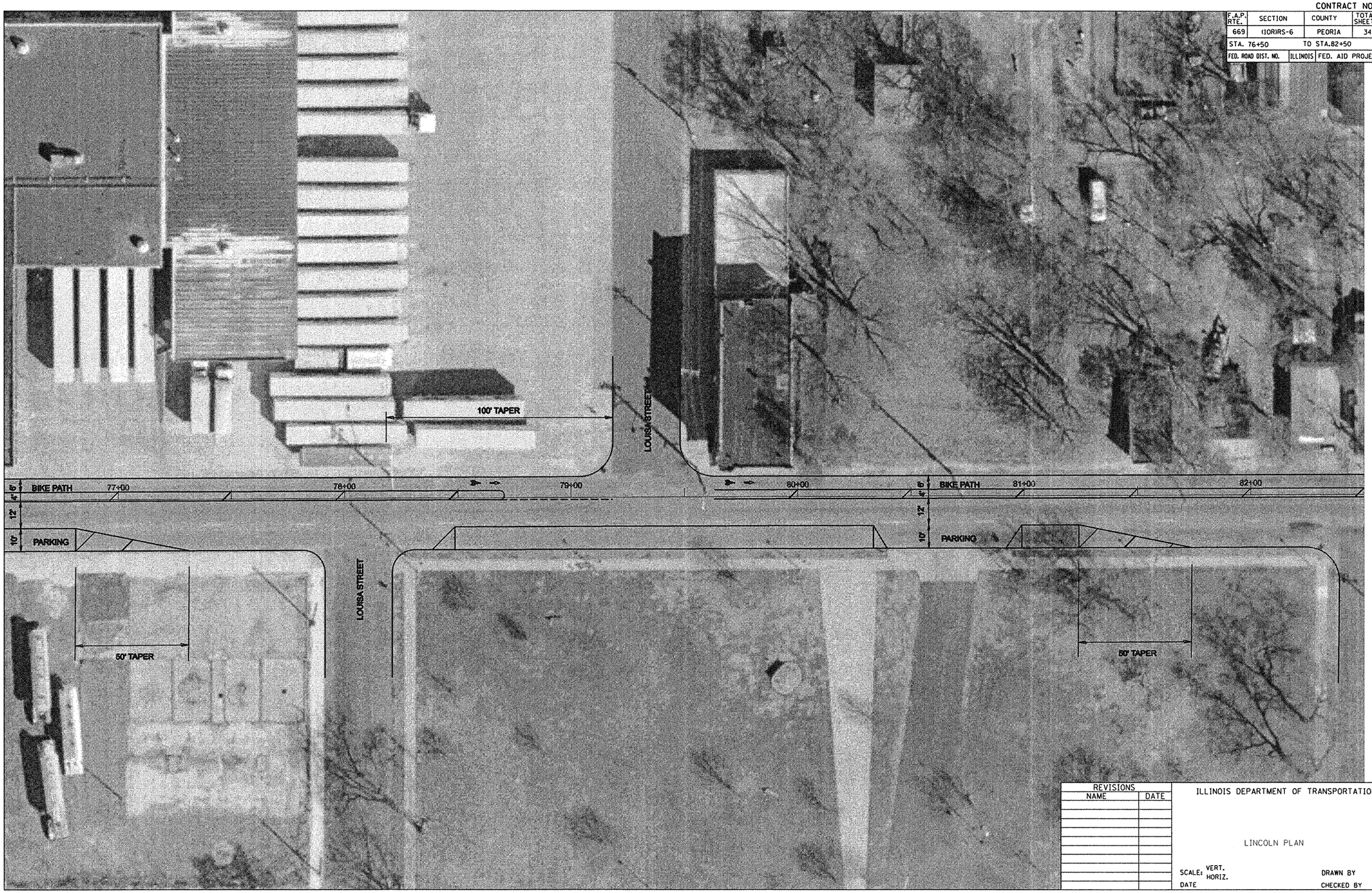

REVISIONS	
NAME	DATE

ILLINOIS DEPARTMENT OF TRANSPORTATION

LINCOLN PLAN

SCALE: VERT.
HORIZ.

DATE

DRAWN BY

CHECKED BY

PLOT DATE = 3/20/2008
FILE NAME = c:\projects\peoria\il 116 lincoln_hewitt\lincoln_hewitt.dgn
PLOT SCALE = 40.0000 ' / IN.
USER NAME = bugenmj

CONTRACT NO. 68797

F.A.P. RTE.	SECTION	COUNTY	TOTAL SHEETS	SHEET NO.
669	(10R)RS-6	PEORIA	34	29
STA. 82+50		TO STA.88+50		
FED. ROAD DIST. NO.	ILLINOIS	FED. AID PROJECT		

REVISIONS	
NAME	DATE

ILLINOIS DEPARTMENT OF TRANSPORTATION

LINCOLN PLAN

SCALE: VERT.
HORIZ.

DATE

DRAWN BY

CHECKED BY

PLOT DATE = 3/20/2008
FILE NAME = c:\projects\safety\peoria\il116 lincoln.hewett\lincoln.hewett.dgn
PLOT SCALE = 40.0000 ' / IN.
USER NAME = bogermj

CONTRACT NO. 68797

F.A.P. RTE.	SECTION	COUNTY	TOTAL SHEETS	SHEET NO.
669	(10)RS-6	PEORIA	34	30
STA. 88+50		TO STA. 94+50		
FED. ROAD DIST. NO.	ILLINOIS	FED. AID PROJECT		

REVISIONS	
NAME	DATE

ILLINOIS DEPARTMENT OF TRANSPORTATION

LINCOLN PLAN

SCALE: VERT. HORIZ.

DATE

DRAWN BY

CHECKED BY

PLOT DATE = 3/20/2008
FILE NAME = c:\projects\safety\peoria\i116 lincoln_howett\lincoln_howett.dgn
PLOT SCALE = 40.0000 ' / IN.
USER NAME = boppert

CONTRACT NO. 68797

F.A.P. RTE.	SECTION	COUNTY	TOTAL SHEETS	SHEET NO.
669	(10)RS-6	PEORIA	34	31
STA. 94+50		TO STA.100+50		
FED. ROAD DIST. NO.	ILLINOIS	FED. AID PROJECT		

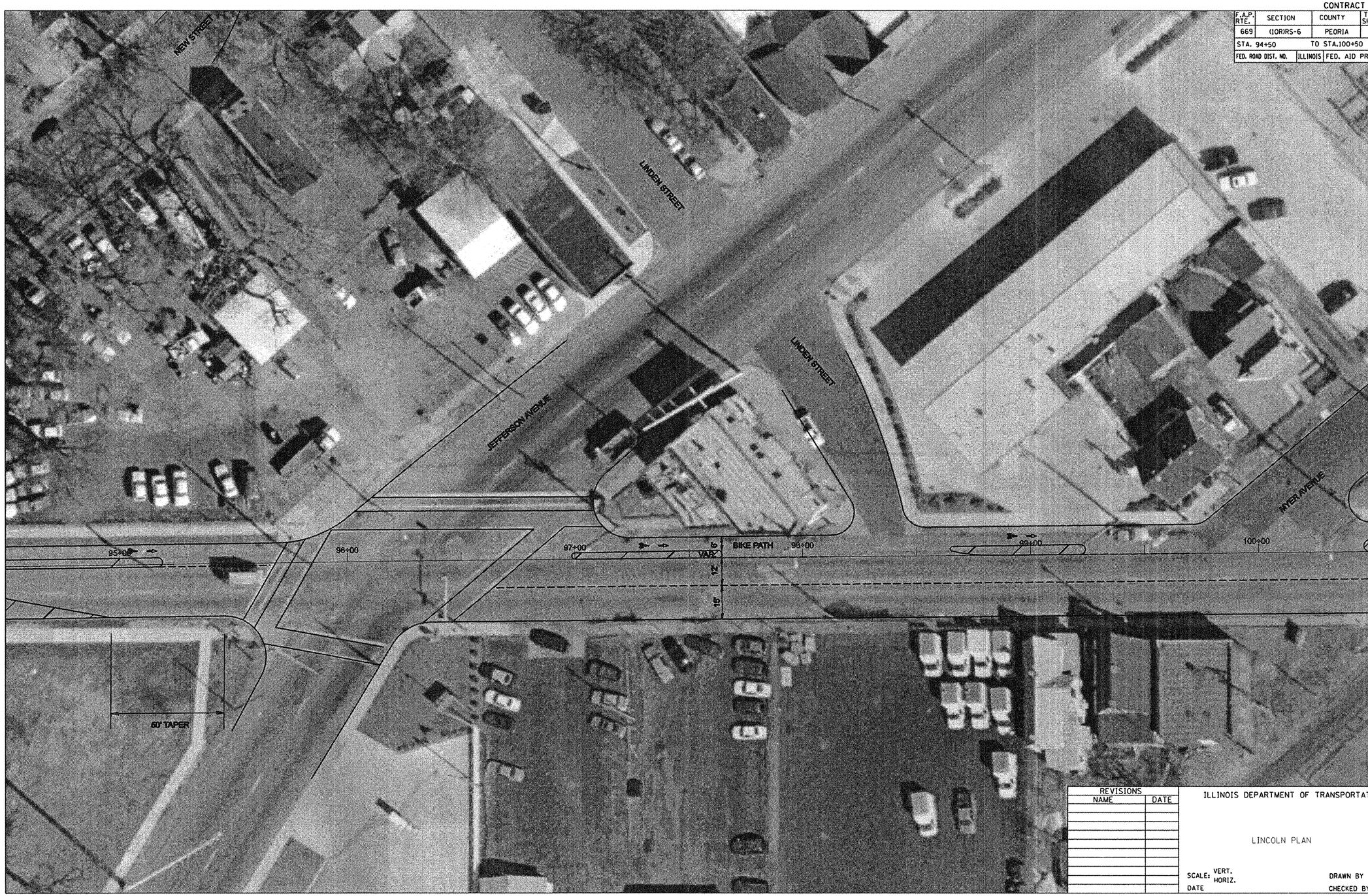

REVISIONS	
NAME	DATE

ILLINOIS DEPARTMENT OF TRANSPORTATION

LINCOLN PLAN

SCALE: VERT. HORIZ.

DATE

DRAWN BY

CHECKED BY

PLOT DATE = 3/29/2005
FILE NAME = c:\projects\safety\peoria\ill 116 lincoln_hewett\lincoln_hewett.dgn
PLOT SCALE = 40.0000 ' / IN.
USER NAME = bayermj

CONTRACT NO. 68797

F.A.P. RTE.	SECTION	COUNTY	TOTAL SHEETS	SHEET NO.
669	(10R)RS-6	PEORIA	34	32
STA. 100+50		TO STA.104+00		
FED. ROAD DIST. NO.	ILLINOIS	FED. AID PROJECT		

REVISIONS	
NAME	DATE

ILLINOIS DEPARTMENT OF TRANSPORTATION

LINCOLN PLAN

SCALE: VERT.
HORIZ.

DATE

DRAWN BY

CHECKED BY

PLOT DATE = 3/26/2008
FILE NAME = c:\projects\safety\peoria\il 116 lincoln.hewitt\lincoln.hewitt.dgn
PLOT SCALE = 40.0000 ' / IN.
USER NAME = bayermj

CONTRACT NO. 68797

F.A.P. RTE.	SECTION	COUNTY	TOTAL SHEETS	SHEET NO.
669	(10R)RS-6	PEORIA	34	33
STA. 73+50		TO STA.68+50		
FED. ROAD DIST. NO.	ILLINOIS	FED. AID PROJECT		

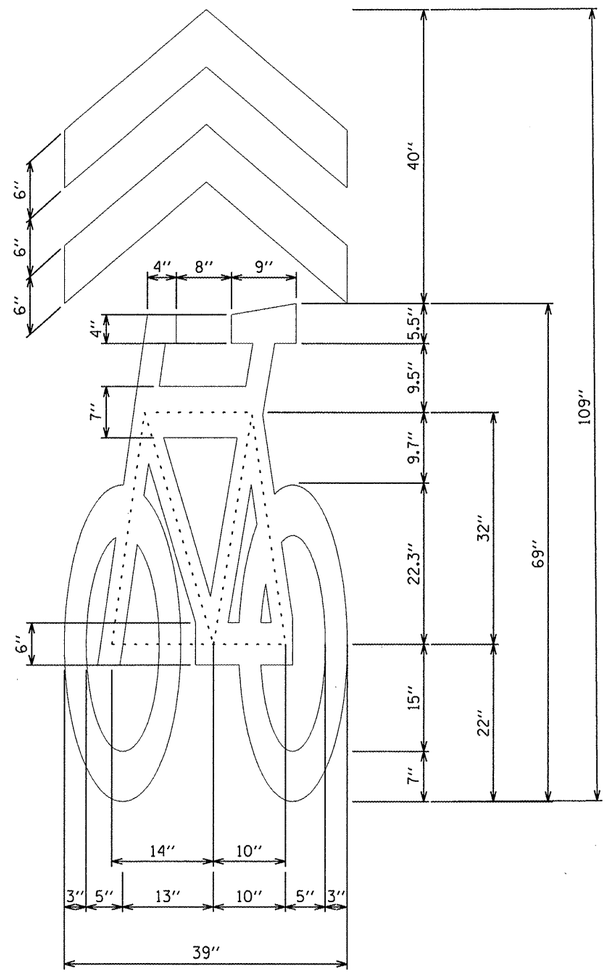

Area of Shared Bike Lane Symbol for Payment = 12.5 SQ. FT.

REVISIONS NAME	DATE

ILLINOIS DEPARTMENT OF TRANSPORTATION

SHARED LANE
SYMBOL DETAIL

SCALE: VERT. HORIZ.

DATE

DRAWN BY

CHECKED BY

PLOT DATE = 3/20/2008
FILE NAME = c:\pw_pecs\safety\peoria\il 116 lincoln_hawest\lincoln_hawest.dgn
PLOT SCALE = 48.0000 ' / IN.
USER NAME = bagermj

CONTRACT NO. 68797

F.A.P. RTE.	SECTION	COUNTY	TOTAL SHEETS	SHEET NO.
669	(10R)RS-6	PEORIA	34	34
STA. 73+50		TO STA.68+50		
FED. ROAD DIST. NO.	ILLINOIS	FED. AID PROJECT		

CONSTRUCTION NOTES

1. THE COST OF REMOVING THE EXISTING ELECTRIC CABLE IN CONDUIT AND DISPOSING OF IT SHALL BE INCLUDED IN THE BID PRICE FOR ELECTRIC CABLE IN CONDUIT, SIGNAL, NO. 14 5/C.
2. THE COST OF REMOVING THE EXISTING PEDESTRIAN PUSH-BUTTONS AND DISPOSING OF THEM SHALL BE INCLUDED IN THE BID PRICE FOR THE PROPOSED PEDESTRIAN PUSH-BUTTONS.

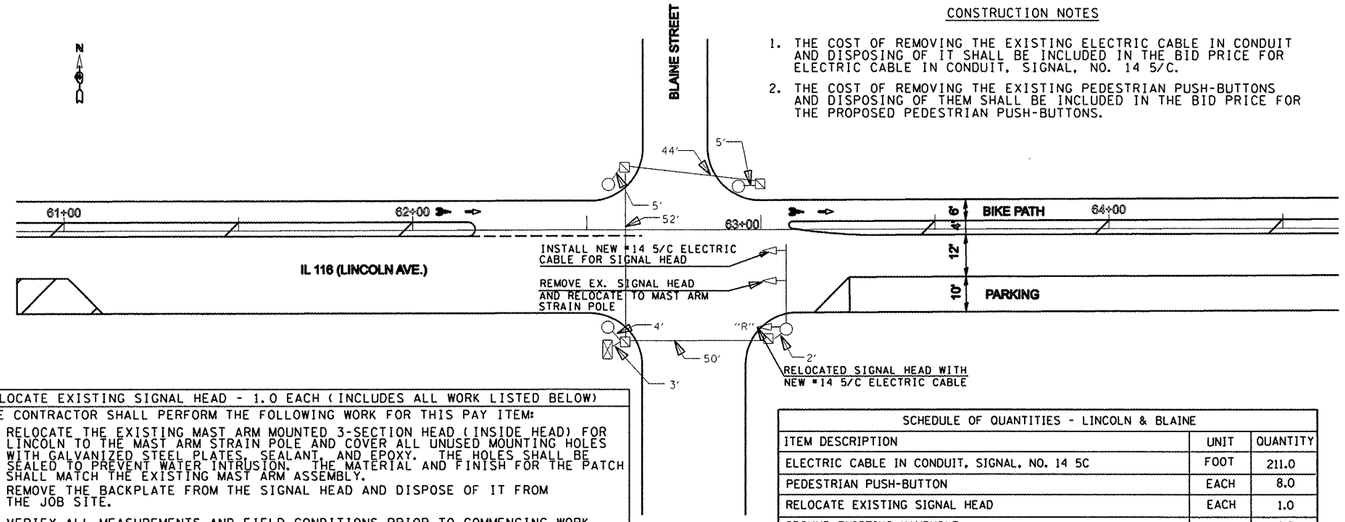

RELOCATE EXISTING SIGNAL HEAD - 1.0 EACH (INCLUDES ALL WORK LISTED BELOW)

THE CONTRACTOR SHALL PERFORM THE FOLLOWING WORK FOR THIS PAY ITEM:

- RELOCATE THE EXISTING MAST ARM MOUNTED 3-SECTION HEAD (INSIDE HEAD) FOR LINCOLN TO THE MAST ARM STRAIN POLE AND COVER ALL UNUSED MOUNTING HOLES WITH GALVANIZED STEEL PLATES, SEALANT, AND EPOXY. THE HOLES SHALL BE SEALED TO PREVENT WATER INTRUSION. THE MATERIAL AND FINISH FOR THE PATCH SHALL MATCH THE EXISTING MAST ARM ASSEMBLY.
- REMOVE THE BACKPLATE FROM THE SIGNAL HEAD AND DISPOSE OF IT FROM THE JOB SITE.
- VERIFY ALL MEASUREMENTS AND FIELD CONDITIONS PRIOR TO COMMENCING WORK.
- PROVIDE AND INSTALL ALL MOUNTING BRACKETS, HARDWARE, AND ALL OTHER MATERIALS REQUIRED TO COMPLETE THE WORK AS DESCRIBED ABOVE.

SCHEDULE OF QUANTITIES - LINCOLN & BLAINE

ITEM DESCRIPTION	UNIT	QUANTITY
ELECTRIC CABLE IN CONDUIT, SIGNAL, NO. 14 5C	FOOT	211.0
PEDESTRIAN PUSH-BUTTON	EACH	8.0
RELOCATE EXISTING SIGNAL HEAD	EACH	1.0
GROUND EXISTING HANDHOLE	EACH	4.0
ELECTRIC CABLE IN CONDUIT, GROUNDING, NO. 6 1C	FOOT	209.0

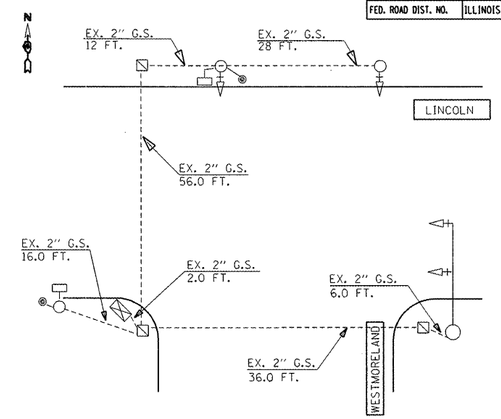

SCHEDULE OF QUANTITIES - LINCOLN & WESTMORELAND

ITEM DESCRIPTION	UNIT	QUANTITY
ELECTRIC CABLE IN CONDUIT, GROUNDING, NO. 6 1C	FEET	193.5
GROUND EXISTING HANDHOLE	EACH	3.0

SCHEDULE OF QUANTITIES - WESTERN & HOWETT

ITEM DESCRIPTION	UNIT	QUANTITY
GROUND EXISTING HANDHOLE	EACH	4.0

SCHEDULE OF QUANTITIES - WESTERN & LINCOLN

ITEM DESCRIPTION	UNIT	QUANTITY
RELOCATE EXISTING SIGNAL HEADS, SPECIAL	L SUM	1.0
GROUND EXISTING HANDHOLE	EACH	4.0

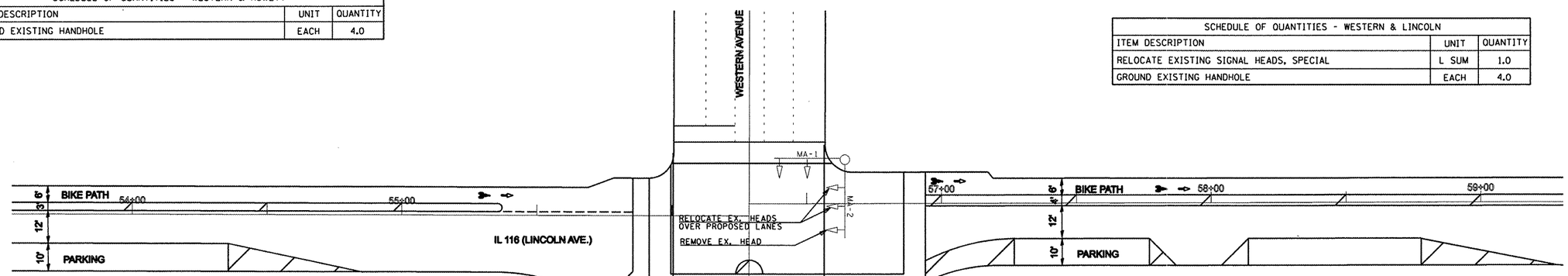

RELOCATE EXISTING SIGNAL HEADS, SPECIAL - 1.0 LSUM

THE CONTRACTOR SHALL PERFORM THE FOLLOWING WORK FOR THIS PAY ITEM:

- REMOVE THE EXISTING MAST ARM MOUNTED 3-SECTION HEAD (OUTSIDE HEAD) AND DELIVER TO THE CITY OF PEORIA DRIES LANE FACILITY.
- RELOCATE THE TWO EXISTING 3-SECTION MAST ARM MOUNTED SIGNALS HEADS EASTBOUND IL 116 (LINCOLN AVE.) AND RELOCATE THEM OVER THE PROPOSED LANES (LEFT TURN/THRU LANE AND BICYCLE LANE). THE CONTRACTOR SHALL REUSE THE EXISTING BRACKETING AND PROVIDE ALL NEW HARDWARE AS REQUIRED TO FACILITATE INSTALLATION. IN THE EVENT THAT THE BRACKETING CAN NOT BE REUSED, THE CONTRACTOR SHALL PROVIDE NEW BRACKETS AT NO ADDITIONAL COST.
- INSTALL NEW 5/C #14 WIRE JUMPERS BETWEEN THE TWO INSIDE MAST ARM MOUNTED SIGNAL HEADS
- COVER ALL UNUSED MOUNTING HOLES IN THE MAST ARM UTILIZING A GALVANIZED STEEL PLATE, SEALANT, AND EPOXY. THE HOLES SHALL BE SEALED TO PREVENT WATER INTRUSION. THE MATERIAL AND FINISH FOR THE PATCH SHALL MATCH THE EXISTING MAST ARM ASSEMBLY AND POLE.
- VERIFY ALL MEASUREMENTS AND FIELD CONDITIONS PRIOR TO COMMENCING WORK.
- PROVIDE AND INSTALL ALL MOUNTING BRACKETS, HARDWARE, AND ANY OTHER MATERIALS REQUIRED TO COMPLETE THE WORK AS DESCRIBED ABOVE.

TRAFFIC SIGNAL LEGEND

- EX. HANDHOLE
- EX. CONDUIT
- EX. CONTROLLER CABINET
- EX. SIGNAL HEAD
- EX. PEDESTRIAN SIGNAL HEAD
- EX. SIGNAL POST
- EX. STEEL MAST ARM
- PROP. SIGNAL HEAD

NOT TO SCALE

REVISIONS	
NAME	DATE

ILLINOIS DEPARTMENT OF TRANSPORTATION

TRAFFIC SIGNAL DETAILS

WESTERN & LINCOLN
WESTERN & HOWETT
LINCOLN & WESTMORELAND
LINCOLN & BLAINE

SCALE: VERT. HORIZ.

DATE

DRAWN BY

CHECKED BY

PLOT DATE = 3/20/2008
FILE NAME = c:\projects\safety\peoria\il 116 lincoln.howett\lincoln.howett.dgn
PLOT SCALE = 40.0000 ' / IN.
USER NAME = bagermj