ROUTE NO.	SECTION	COUNTY	TOTAL SHEETS	SHEET NO.
8071	*	SANGAMON	427	237
FED. ROAD DIST. NO. 7		ILLINOIS	FED. AID PROJECT-	

* (84-9) RS-6; (G)Z

STATE OF ILLINOIS
DEPARTMENT OF TRANSPORTATION

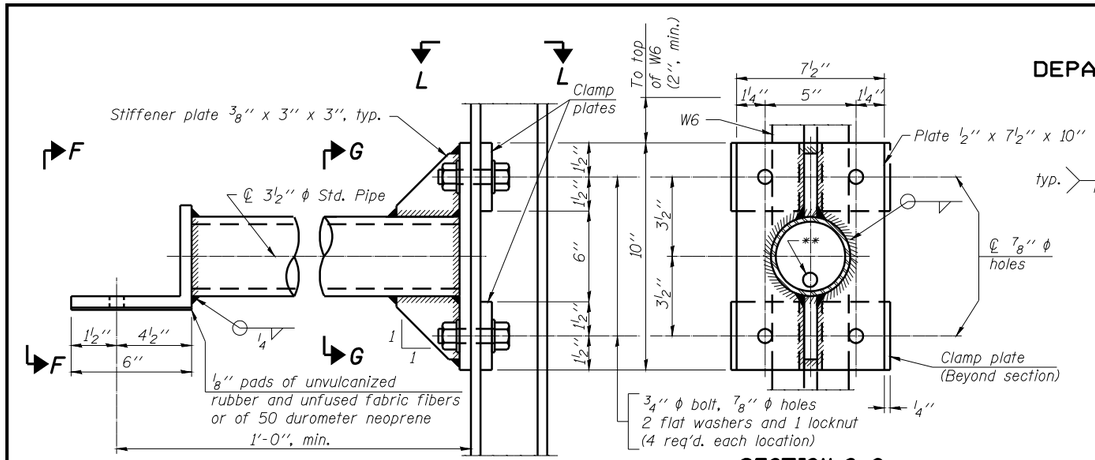

DETAIL A

SECTION G-G

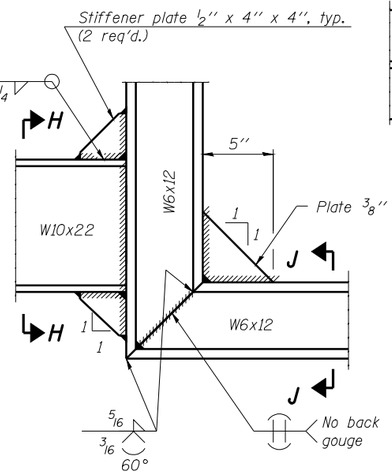

DETAIL B - WELDED W10x22 TO W6x12 CONNECTION

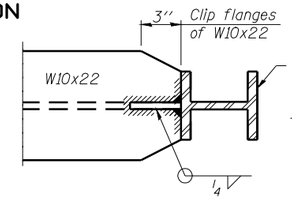

SECTION E-E

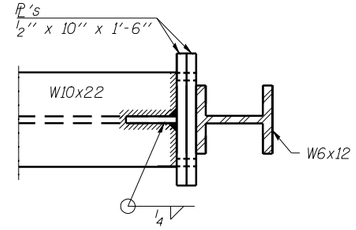

SECTION K-K

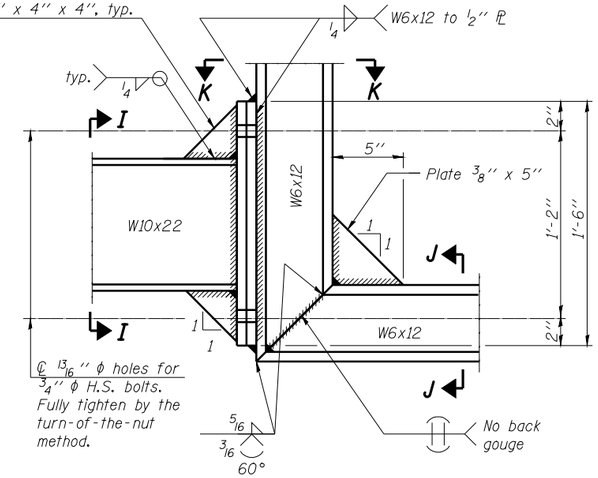

DETAIL B - ALTERNATE BOLTED W10x22 TO W6x12 CONNECTION

Alternate may be substituted by contractor to facilitate construction or galvanizing, especially on long struts for skewed bridges.

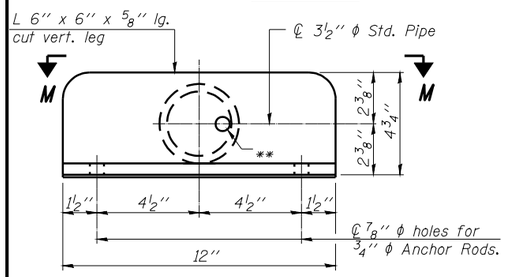

VIEW F-F

** 13/16" ϕ holes for galvanizing. After galvanizing, install 7/8" ϕ A307 hot-dip galvanized bolt to close hole in angle. (No bolt required in 1/2" plate.)

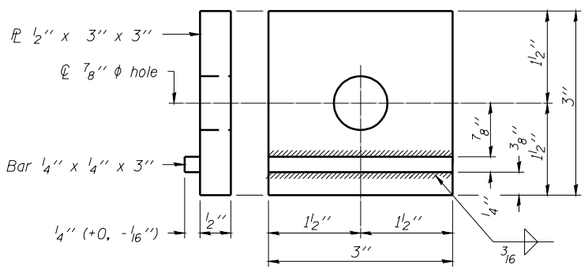

CLAMP PLATE DETAILS

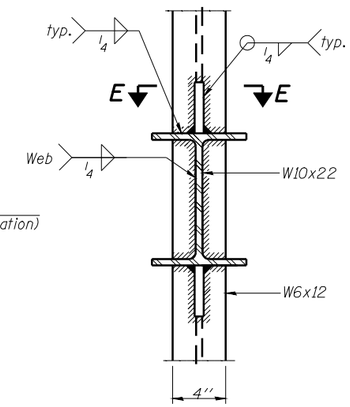

SECTION H-H

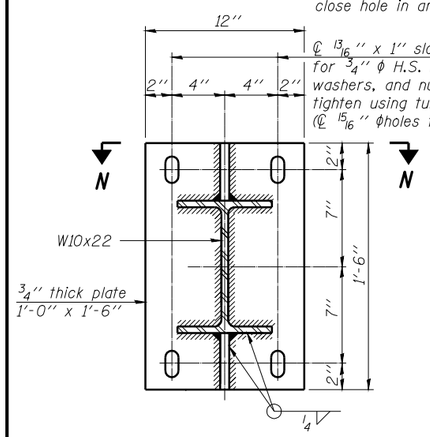

SECTION C-C

Steel beam or girder connection plate details

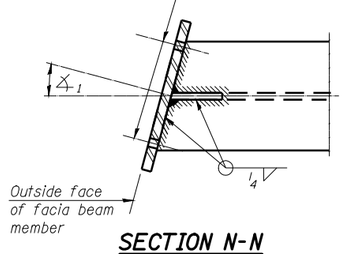

SECTION N-N

Skewed connection detail for W10x22 to facia beam.

Note: For constant slab overhang at facia beam, ∡1 = ∡2 = sign angle. For flared beams or other special cases where ∡1 ≠ ∡2, ∡1 = sign angle.

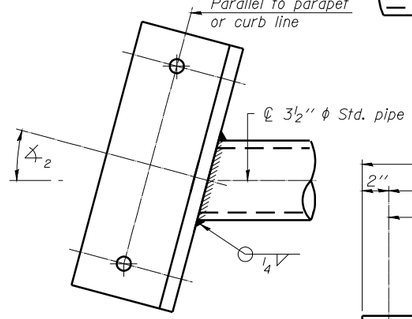

SECTION M-M

Skewed connection detail for 3 1/2" ϕ pipe to parapet.

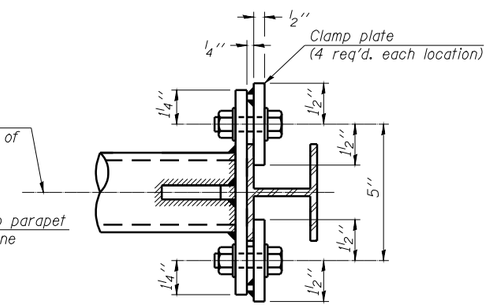

SECTION L-L

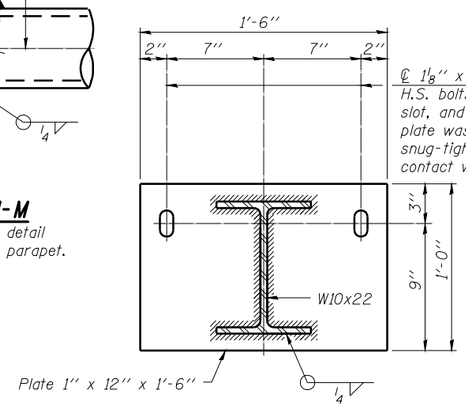

SECTION D-D

Concrete beam or girder connection plate details.

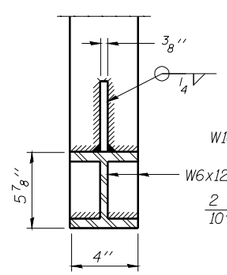

SECTION J-J

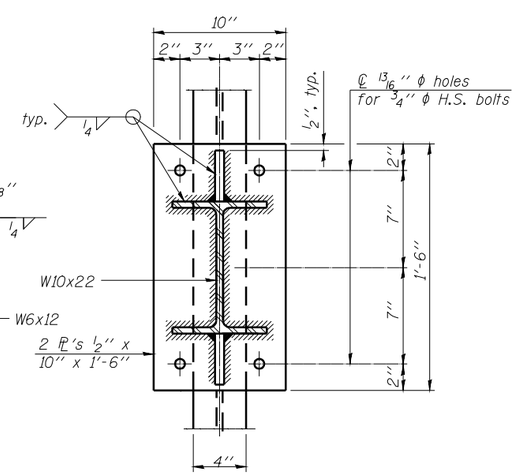

SECTION I-I

BRIDGE MOUNT SIGN STRUCTURES CONNECTION DETAILS

SIGNING DETAIL
6B084I072R095.8
6B084I072L096.8
FAI-72, MACARTHUR BLVD

DESIGNED	-
CHECKED	-
DRAWN	-
CHECKED	-

- 20

EXAMINED

ENGINEER OF BRIDGE DESIGN

PASSED

ENGINEER OF BRIDGES AND STRUCTURES

NUMBER	REVISION	DATE

BM-3 6/01/2007