STATE OF ILLINOIS
DEPARTMENT OF TRANSPORTATION

ROUTE NO.	SECTION	COUNTY	TOTAL SHEETS	SHEET NO.
8071	*	SANGAMON	425	239
FED. ROAD DIST. NO. 7		ILLINOIS	FED. AID PROJECT-	

* (B4-9) RS-6; (G)Z

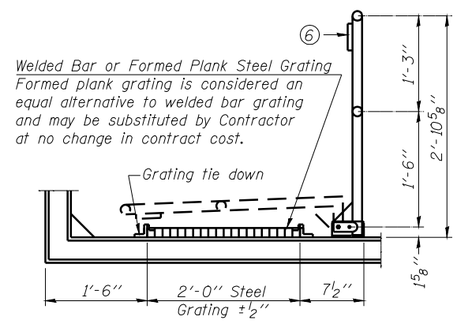

SIDE ELEVATION

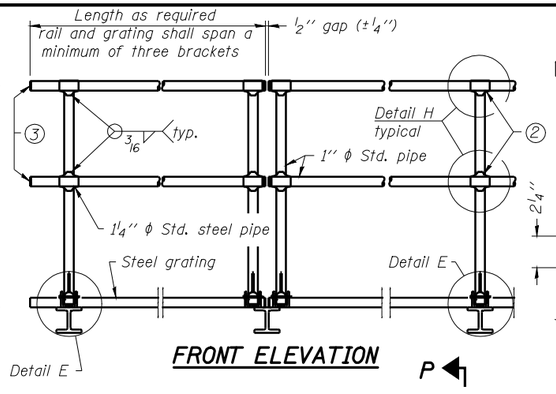

FRONT ELEVATION

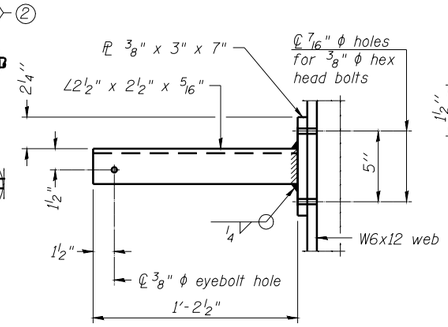

SECTION P-P

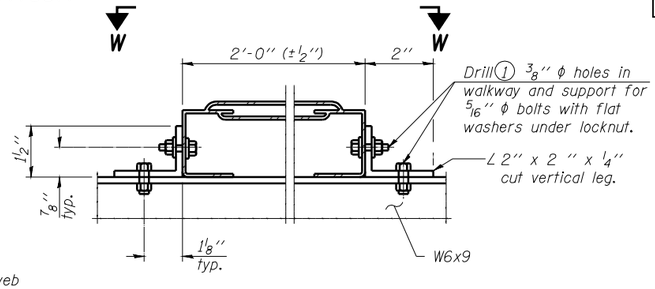

ALTERNATE FORMED PLANK GRATING DETAILS

Plank Grating: nominal depth = 2 1/2" (±1/2"); perforated or expanded steel sheet with a non-skid surface (non-serrated) concentrated load capacity = 500 lbs. with 6'-0" clear span.

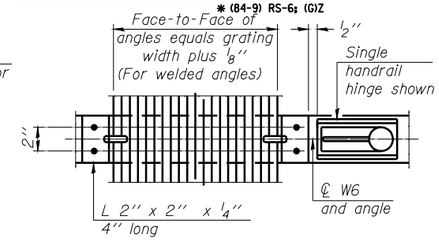

(WALKWAY GRATING CONTINUOUS)

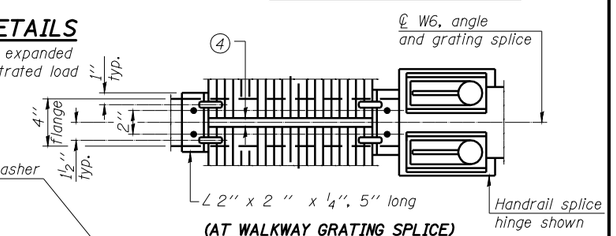

(AT WALKWAY GRATING SPLICE)

PLAN

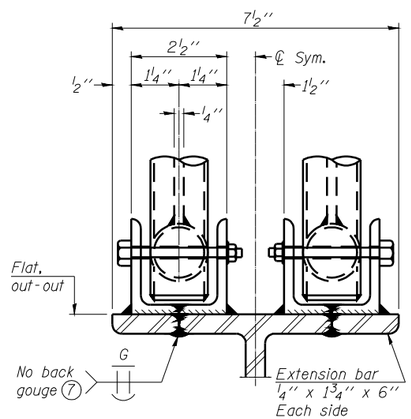

ELEVATION AT HANDRAIL JOINT

(Details not shown same as "FRONT ELEVATION")

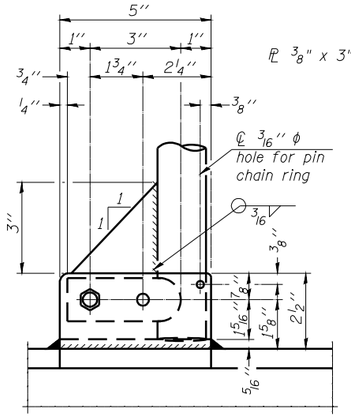

SIDE ELEVATION

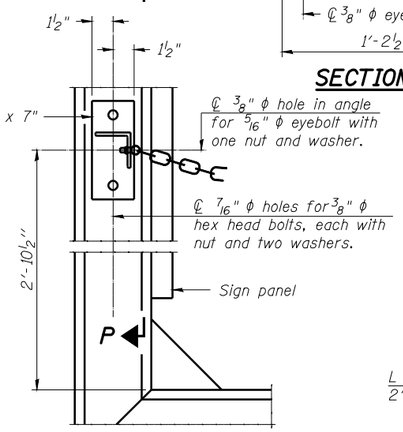

SAFETY CHAIN ATTACHMENT

(With Sign Present)
Items not shown same as "SIDE ELEVATION" and "SAFETY CHAIN"

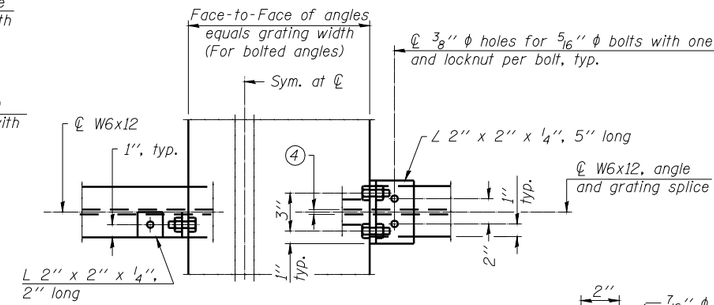

GRATING CONTINUOUS AT GRATING SPLICE

VIEW W-W

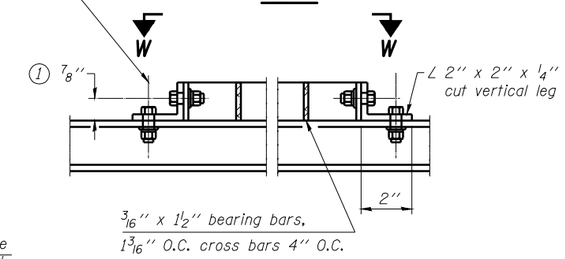

WELDED BAR GRATING DETAILS

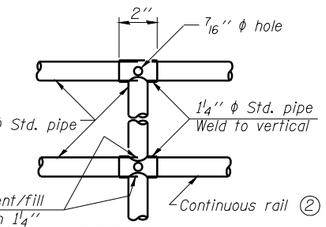

DETAIL H

Welds 3/16" continuous

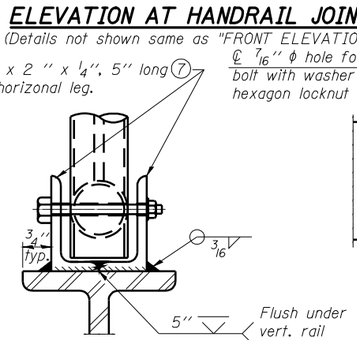

FRONT ELEVATION

(See above Elevations for dimensions.)

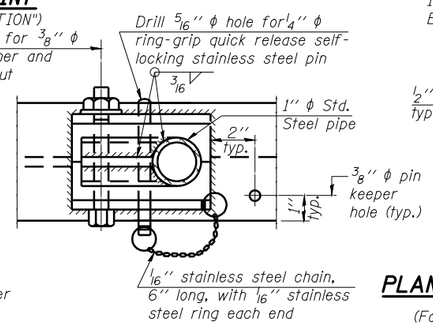

PLAN AT SINGLE HANDRAIL HINGE

DETAIL E

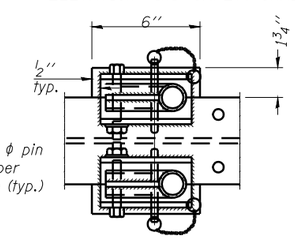

PLAN AT HANDRAIL JOINT

(For Details, see Elevations.)

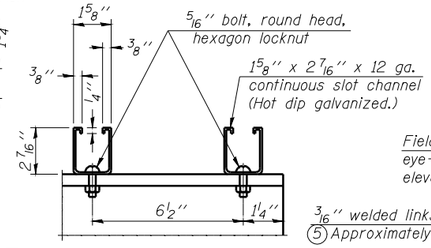

SECTION F-F

LIGHTING FIXTURE MOUNTS

(If required)

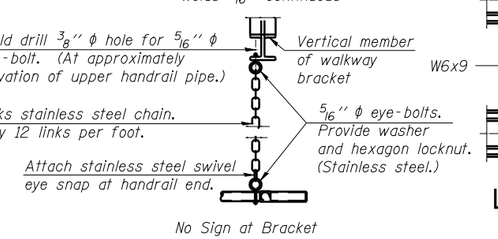

SAFETY CHAIN

One (1) required for each end of each walkway.

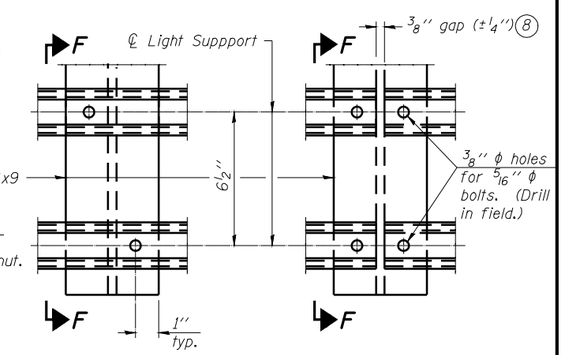

DETAIL F DETAIL G

NOTES

(1) Drilling holes in grating may be done in shop or field, based on Contractor's preference and subject to accurate alignment. Field drilled holes must be touched up with galvanized paint.

(2) Horizontal rail member shall be continuous thru 1 1/4" ϕ pipe. Provide 7/16" ϕ hole in 1 1/4"ϕ pipe for 3/8" ϕ bolt. Field drill 7/16" ϕ hole in horizontal rail member. Provide washer and locknut for bolt. (Use 5/16" eyebolts in 7/16" ϕ holes on top rail at ends only.)

(3) Install standard force-fit end caps or weld 1/8" end plates with 1/8" c.f.w. and grind smooth. (All rail ends.)

(4) 3/8" (±1/4") gap between grating panels at splice.

(5) Chain to be type 304L stainless steel suitable for prolonged exterior exposure. Approximately 3'-6" long chain per location. Maximum sag with handrail erected = 4".

(6) PL 1/8" x 1/2" x 2" welded to handrail posts to protect locations that contact grating.

(7) Extrusions may be used in lieu of details shown, with approval by Engineer.

(8) Field cut ends of light support channels shall be free of burrs or hazardous projections and coated with zinc-rich primer or equivalent.

NUMBER	REVISION	DATE

DESIGNED	-
CHECKED	-
DRAWN	-
CHECKED	-

- 20

EXAMINED

ENGINEER OF BRIDGE DESIGN

PASSED

ENGINEER OF BRIDGES AND STRUCTURES

BM-4 6/01/2007

BRIDGE MOUNT SIGN STRUCTURES
WALKWAY DETAILS

SIGNING DETAIL
6B084I072R095.8
6B084I072L096.8
FAI-72, MACARTHUR BLVD