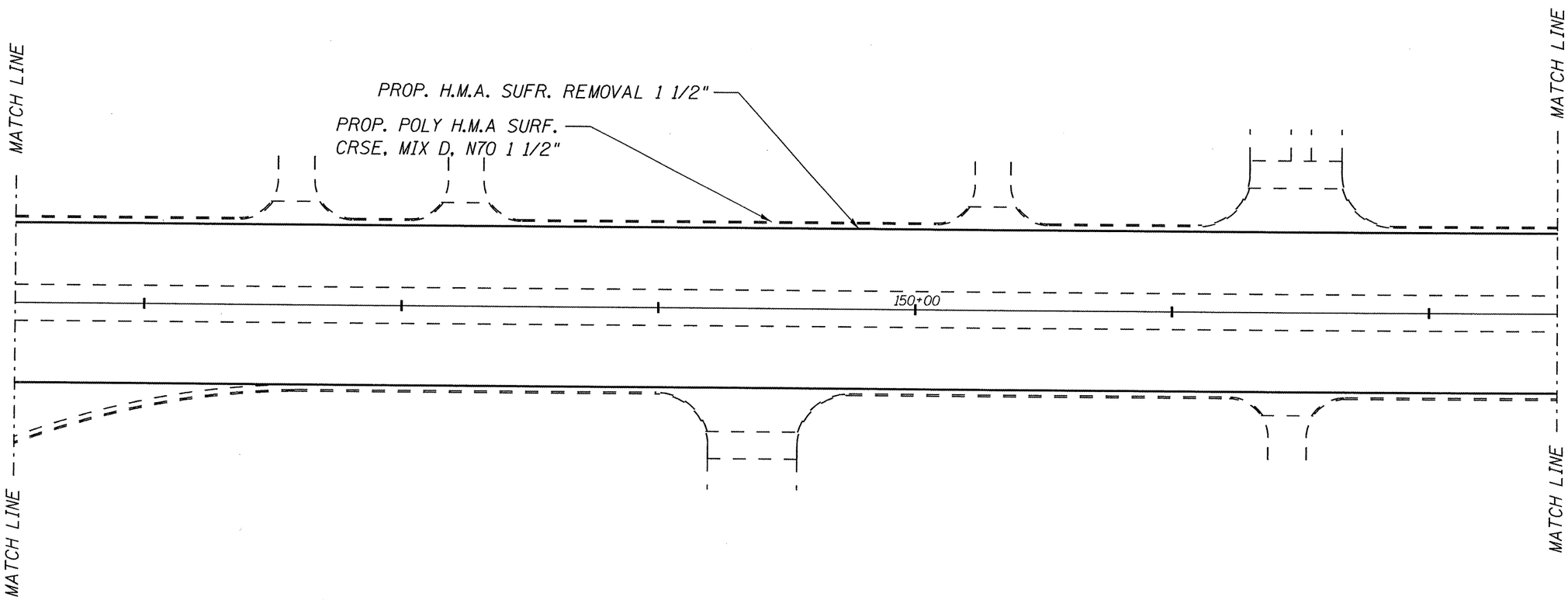

PLAN
FAP 745 (IL 104)
SECTION 103I-2, 104I-1
ADAMS COUNTY