CONTRACT NO. 85427

F.A. RTE.	SECTION	COUNTY	TOTAL SHEETS	SHEET NO.
	05-00174-00-BT	ROCK ISLAND	112	93A
STA.		TO STA.		
FED. ROAD DIST. NO.	ILLINOIS	FED. AID PROJECT		

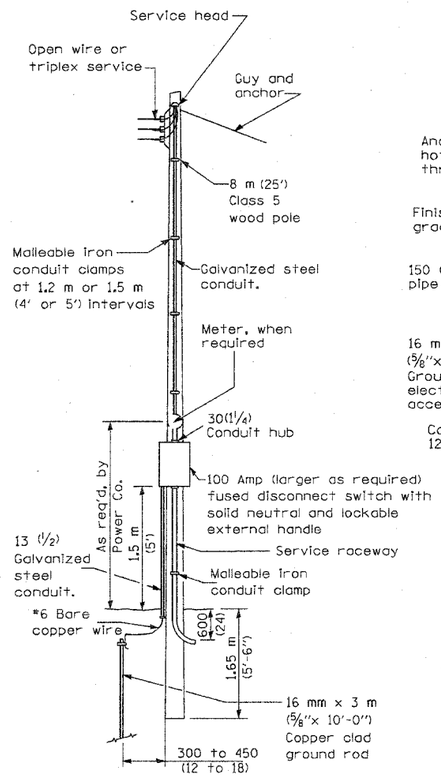

SERVICE POLE

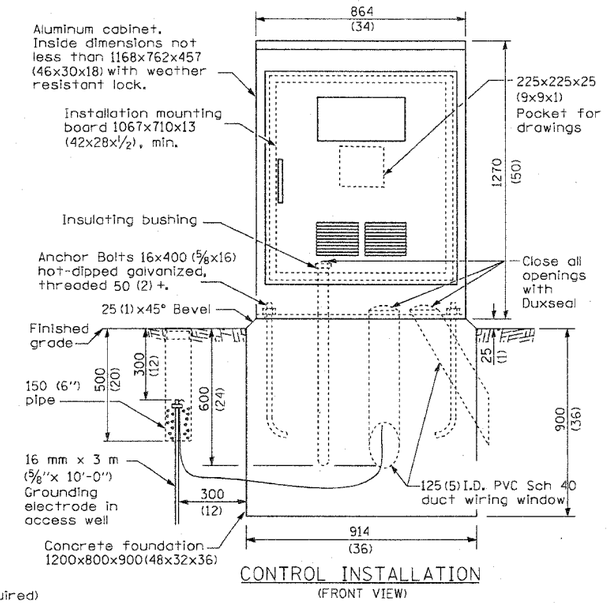

CONTROL INSTALLATION
(FRONT VIEW)

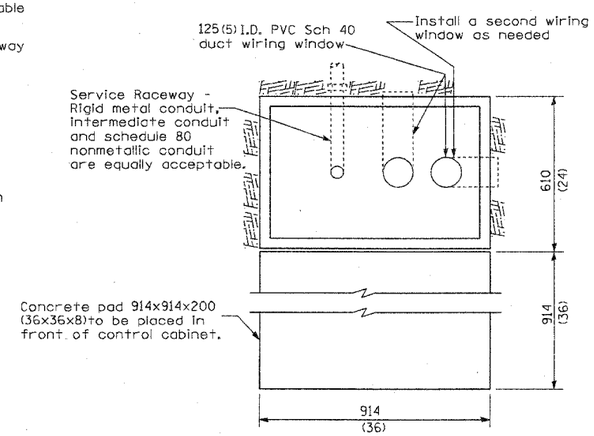

FOUNDATION
(TOP VIEW)

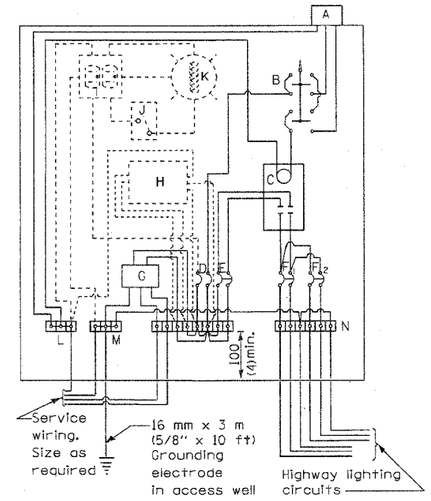

CONTROL SCHEMATIC

MATERIALS

- A Photocell w/ integral surge arrester (remote mount in urban areas)
- B 3 position selector switch HAND-OFF-AUTO
- C 100 amp• electrically held contactor, 120V operating coil
- D 15 amp, 1 pole, circuit breaker
- E 100 amp•, 2 pole, main circuit breaker
- F 20 amp•, 2 pole, branch circuit breaker (typ). 2 spare c.b. required but not shown
- G Surge arrestor
- H Transformer (see notes), 1 KVA•, 240/480V primary, 120/240V sec, single phase
- I GFCI duplex receptacle
- J Single pole, single throw switch
- K Shielded security fixture with 100W lamp
- L Neutral bar
- M Equipment ground bar
- N Terminal block (typ)

(• = Size larger as needed)

GENERAL NOTES

Locate service pole and control installation adjacent to R.O.W. line with a minimum distance of 9 m (30') from the edge of pavement. Locate in close proximity to the utility transformer so the service drop does not exceed 46 m (150ft) and the total distance of overhead and underground cable (utility transformer to lighting controller) does not exceed 76 m (250ft). Exact location shall be established by the Engineer.

Wiring shall be panel board fashion. All bends shall be right angles. All runs shall vertical or parallel to panel board. Wires shall be grouped or laced.

All control installation components shall be U.L. listed.

Add receptacle, light, and switch in control cabinet, when specified.

For 480 V service, a step down transformer (dashed lines) is required.

Raceways shall terminate 75 (3) above top of concrete foundation.

Label equipment ground buss and neutral buss.

All dimensions are in millimeters (inches) unless otherwise shown.

☒ 240 V. SERVICE
☐ 480 V. SERVICE

REVISIONS	
NAME	DATE

ILLINOIS DEPARTMENT OF TRANSPORTATION

STANDARD LGT005
CONTROL INSTALLATION
BASE MOUNT CABINET

SCALE: VERT. HORIZ.
DATE
DRAWN BY
CHECKED BY

PLOT DATE = %DATE%
FILE NAME = $FILEL$
PLOT SCALE = $SCALE$
USER NAME = $USER$